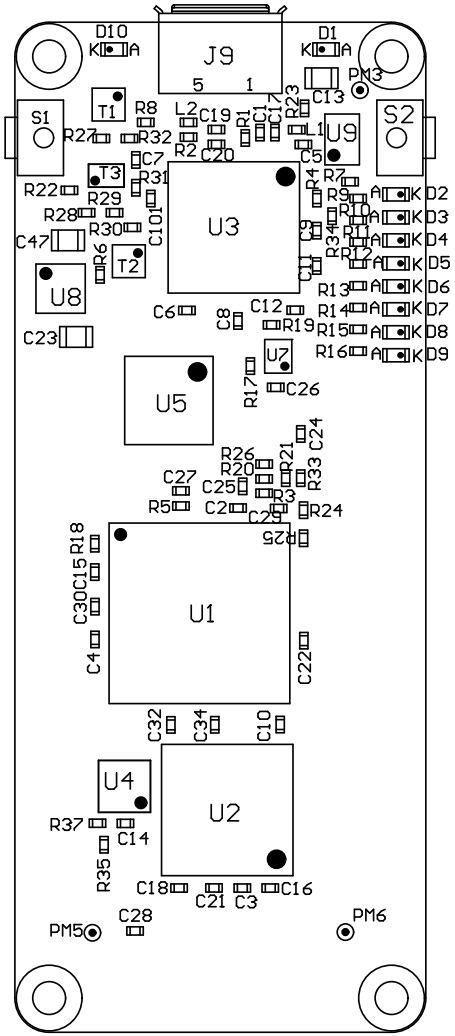
J9
5
1
D10
K
A
D1
K
A
PM3
C13
S1
S2
T1
R8
L2
C19
R1
C1
C17
R23
U9
R27
R32
R2
C20
C5
R7
C7
R31
T3
R22
R29
R28
R30
C47
C10
U3
R4
R9
R10
R11
R12
R13
R14
R15
R16
D2
D3
D4
D5
D6
D7
D8
D9
R6
T2
U8
C11
R34
C9
C6
C8
C12
R19
C23
U7
R17
C26
U5
R26
R20
R21
C24
R33
C27
C25
R3
R5
C2
C29
R24
R25
R18
C15
C30
C4
U1
C22
C32
C34
C10
U4
U2
R37
C14
R35
C18
C21
C3
C16
C28
PM5
PM6

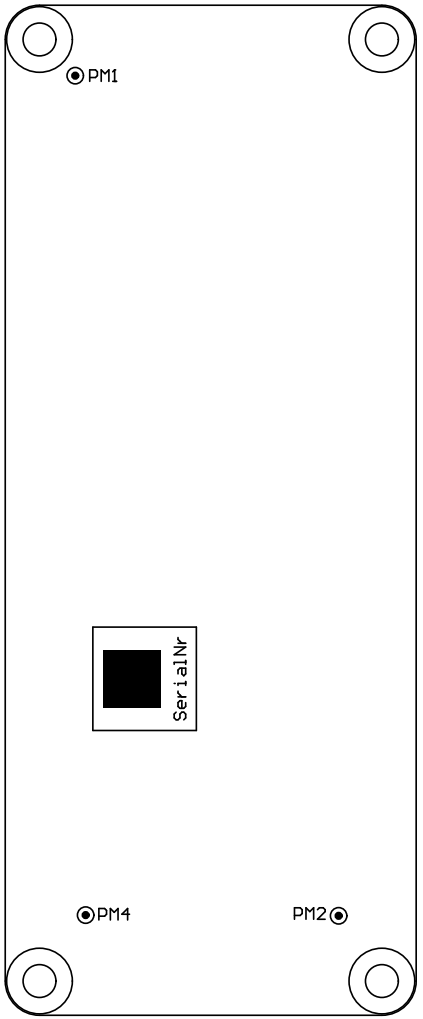
PM1
SerialNr
PM4
PM2

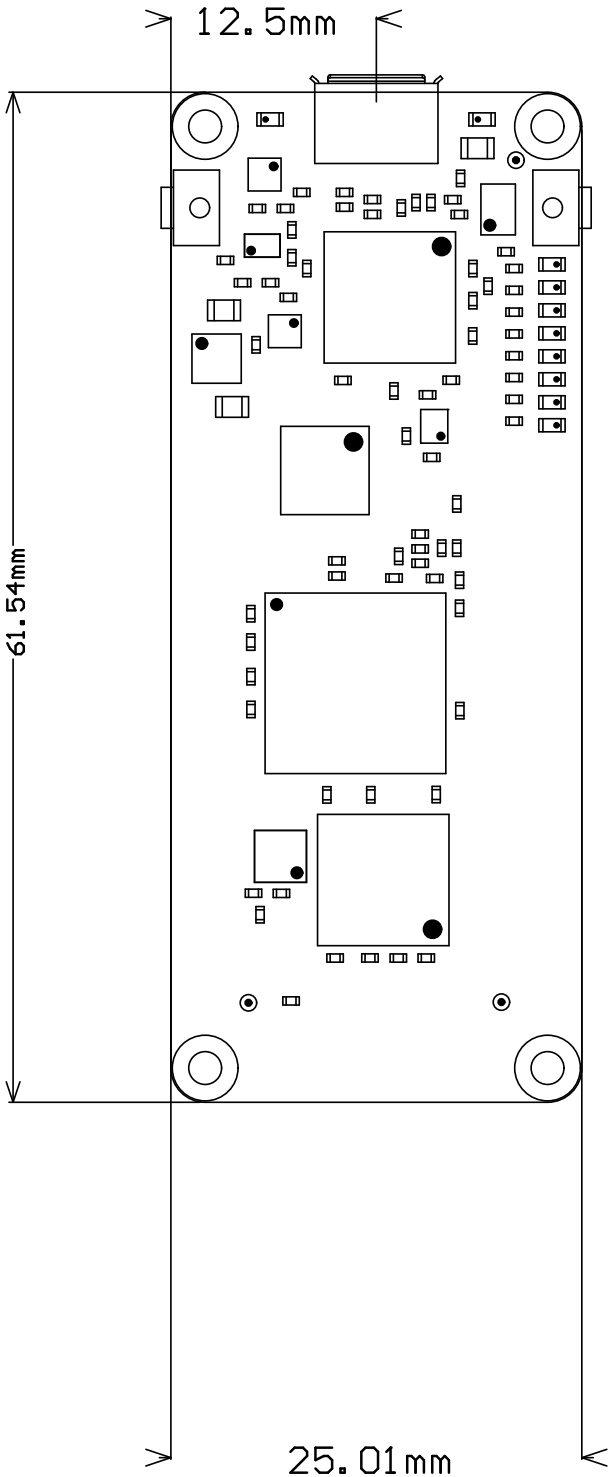
12.5mm
61.54mm
25.01mm

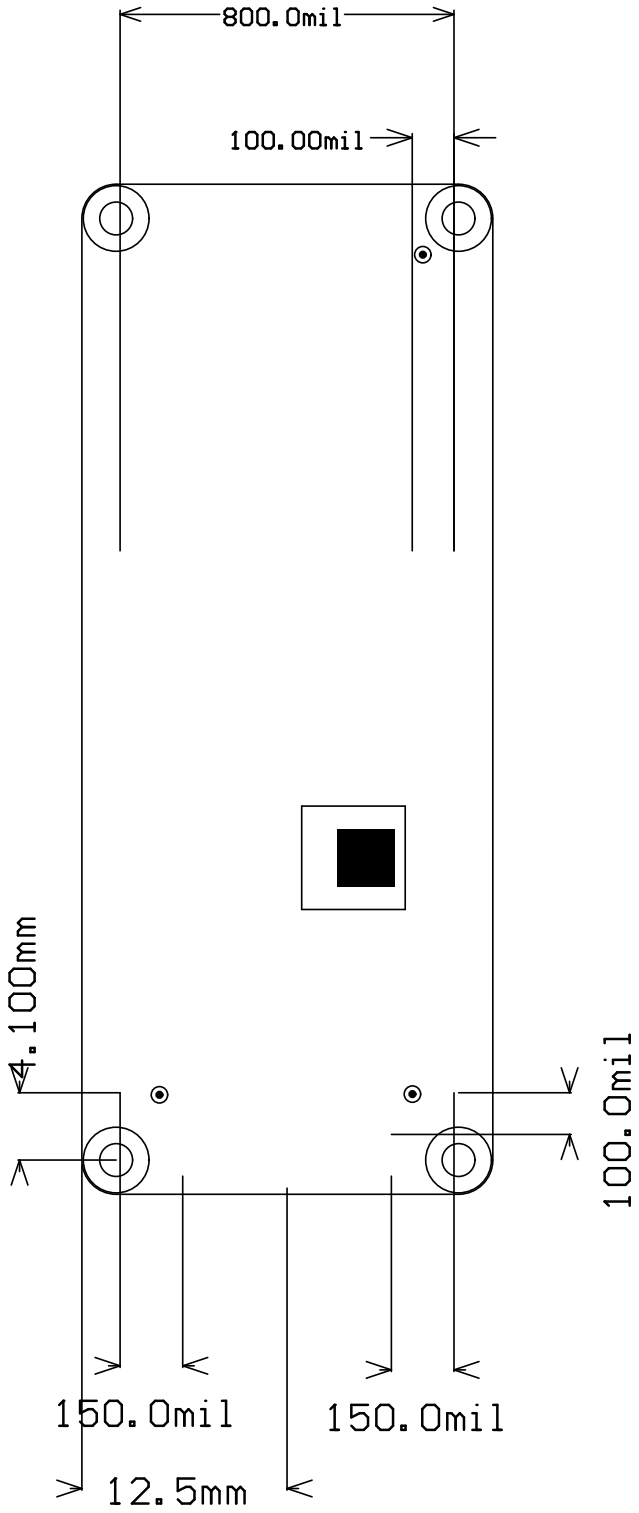
800.0mil
100.00mil
4.100mm
100.0mil
150.0mil
150.0mil
12.5mm