U_J1
J1.SchDoc

U_J2
J2.SchDoc

U_J3
J3.SchDoc

U_J4
J4.SchDoc

U_DDR4-TERM
DDR4-TERM.SchDoc

U_B64
B64.SchDoc

U_B65
B65.SchDoc

U_B66
B66.SchDoc

U_B_GT
B_GT.SchDoc

U_B_GT_2
B_GT_2.SchDoc

U_B_PS_GT
B_PS_GT.SchDoc

U_PS_DDR
PS_DDR.SchDoc

U_B_MIO
B_MIO.SchDoc

U_B_HD
B_HD.SchDoc

U_Clock
Clock.SchDoc

U_CONFIG
CONFIG.SchDoc

U_DDR4-RAM
DDR4-RAM.SchDoc

U_DDR4-RAM_2
DDR4-RAM_2.SchDoc

U_DDR4-RAM_3
DDR4-RAM_3.SchDoc

U_DDR4-RAM_4
DDR4-RAM_4.SchDoc

U_DDR4-TERM
DDR4-TERM.SchDoc

U_ZU_POWER
ZU_POWER.SchDoc

U_ZU_PS_POWER
ZU_PS_POWER.SchDoc

U_POWER
POWER.SchDoc

U_POWER_2
POWER_2.SchDoc

U_POWER_3.
POWER_3.SchDoc

U_POWER_4
POWER_4.SchDoc

GND
Mount.Hole 3.2mm für Unterlegscheibe

GND
Mount.Hole 3.2mm für Unterlegscheibe

GND
Mount.Hole 3.2mm für Unterlegscheibe

GND
Mount.Hole 3.2mm für Unterlegscheibe

GND
Mount.Hole 3.2mm für Unterlegscheibe

GND
Mount.Hole 3.2mm für Unterlegscheibe

GND
Mount.Hole 3.2mm für Unterlegscheibe

GND
Mount.Hole 3.2mm für Unterlegscheibe

PM1
FIDU-DOT - mini

PM2
FIDU-DOT - mini

PM3
FIDU-DOT - mini

PM4
FIDU-DOT - mini

PM6
FIDU-DOT - mini

PM5
FIDU-DOT - mini

LOGO1
TE Logo PRINT Layer
LOGO PRINT

Serial
Serial
Serialnumber 6,3 x 6.3mm

Assembly variant	4AI21-A
Created by	VY
Modified by	VY
Modified at	2020-01-23
SVN Revision	8606 [Locally Modified]

trenz electronic

Title:	TE0807		
A4	Number: TE0807 4AI21-A		Rev. 02
Date: 2018-07-09	Copyright: Trenz Electronic GmbH / TT		Page1 of 28
Filename:	TE0807.SchDoc		

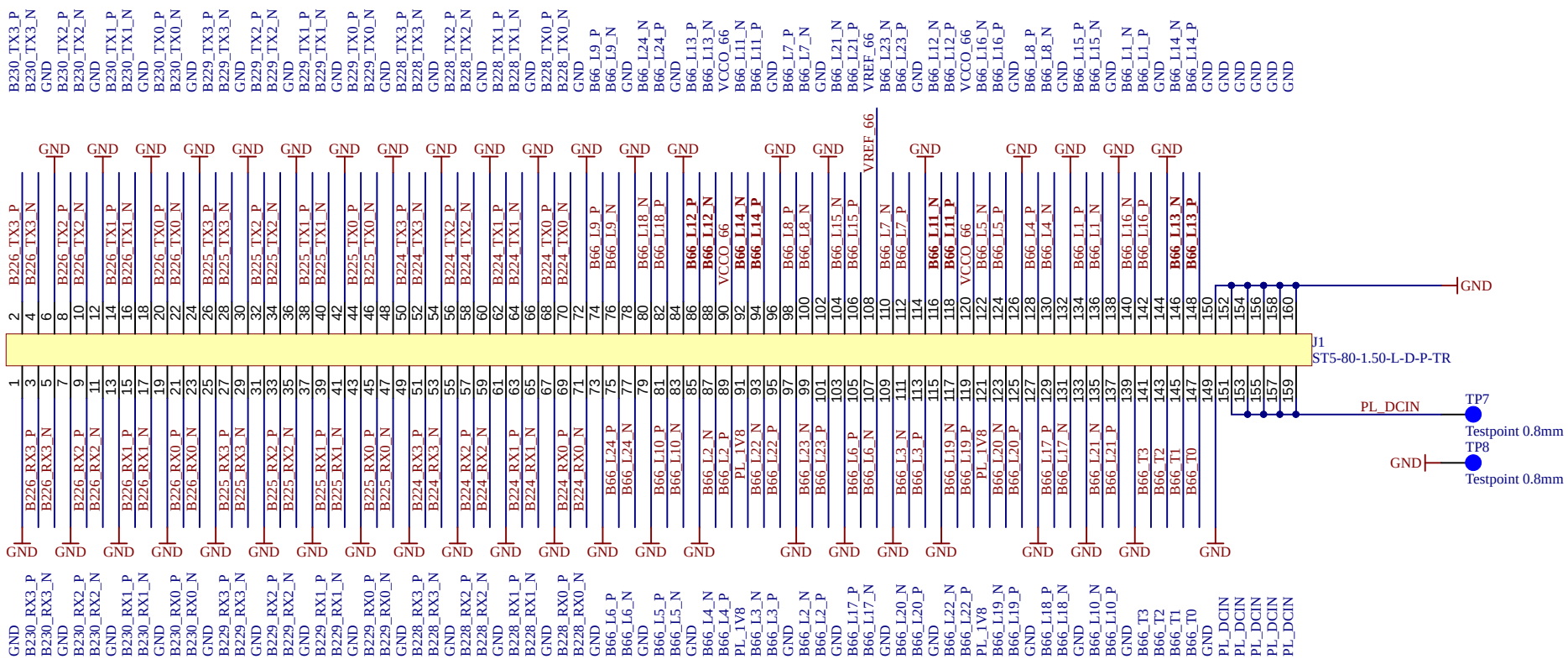

trenz electronic	Title: TE0807 - Connector J1		
A4	Number: TE0807 4AI21-A		Rev. 02
Date: 2018-07-09	Copyright: Trenz Electronic GmbH / TT		Page2 of 28
Filename: J1.SchDoc			

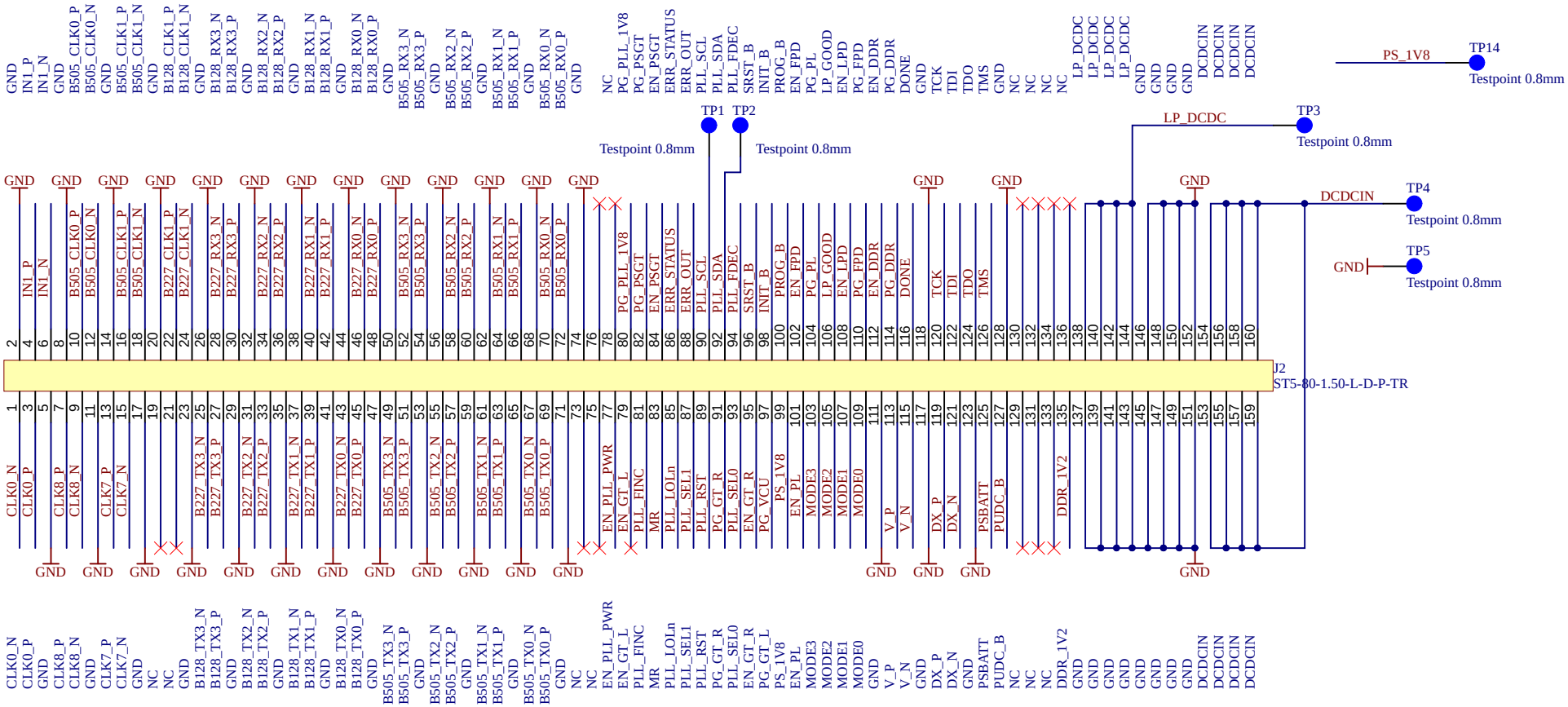

EEPROM for MAC

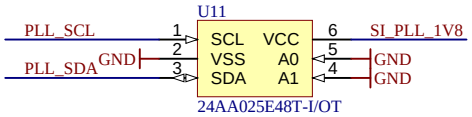

Slave address: 1010000x

Title: TE0807 - Connector J2			
A4	Number: TE0807 4AI21-A		Rev. 02
Date: 2018-07-09	Copyright: Trenz Electronic GmbH / TT		Page3 of 28
Filename: J2.SchDoc			

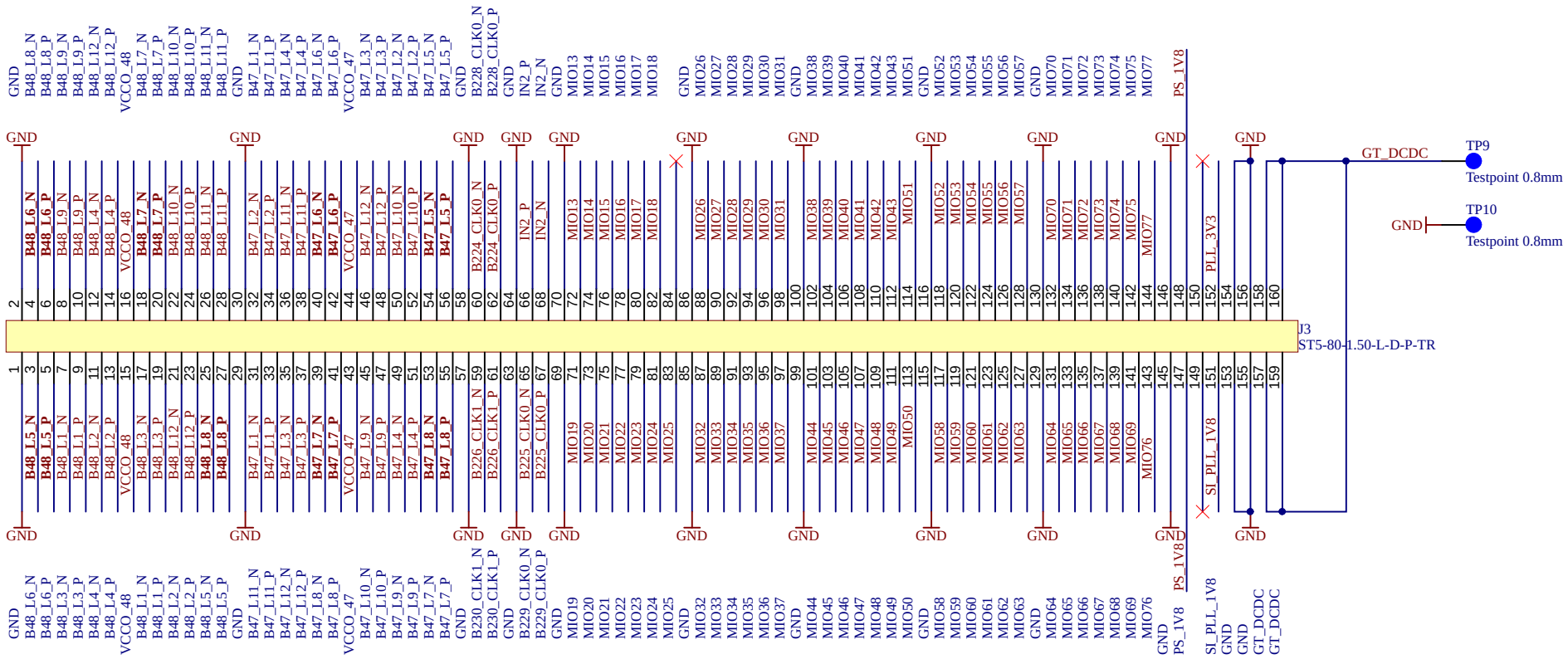

trenz electronic	Title: TE0807 - Connector J3		
A4	Number: TE0807 4AI21-A		Rev. 02
Date: 2018-07-09	Copyright: Trenz Electronic GmbH / TT		Page4 of 28
Filename: J3.SchDoc			

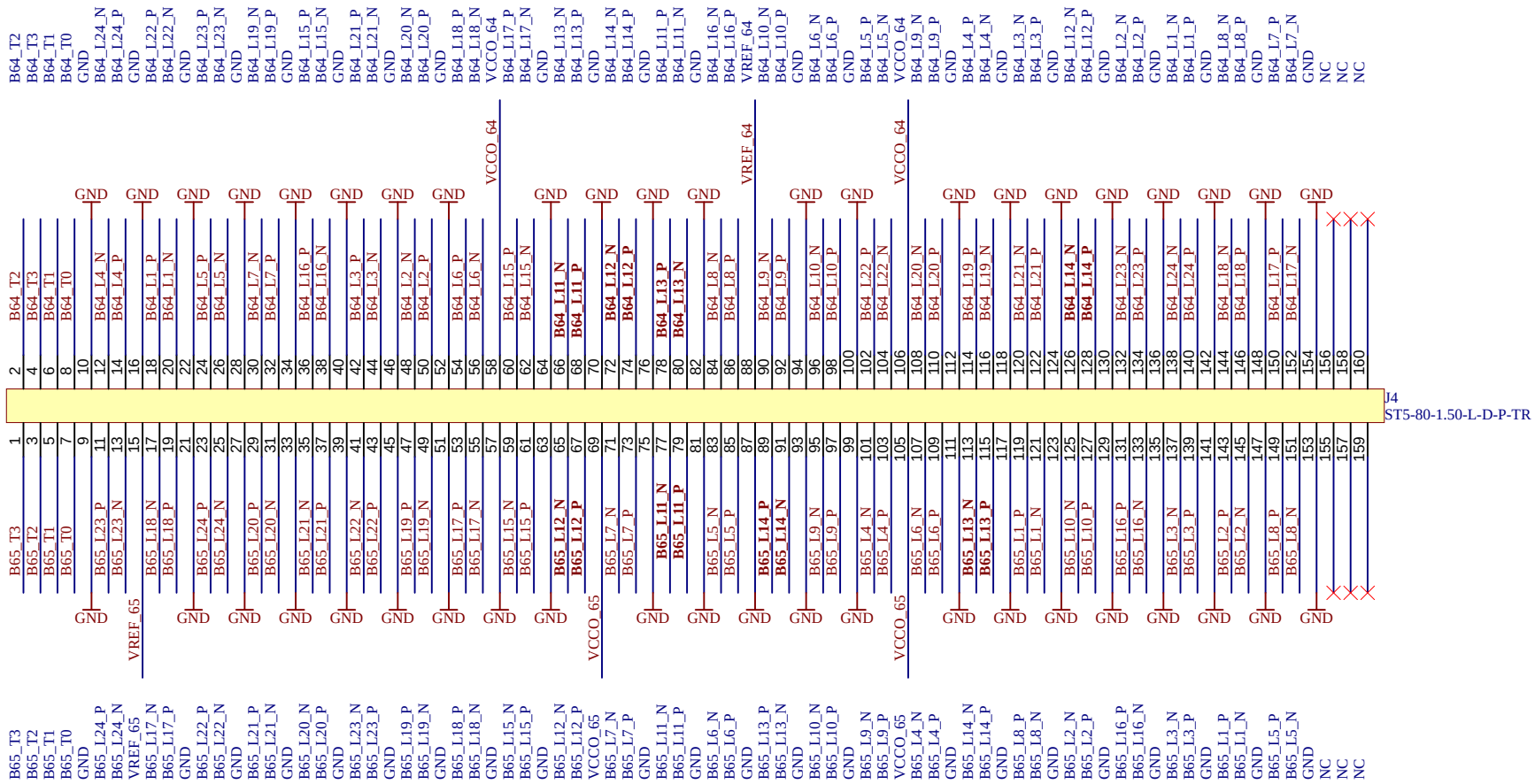

Title: TE0807 - Connector J4			
A4	Number: TE0807 4AI21-A		Rev. 02
Date: 2018-07-09	Copyright: Trenz Electronic GmbH / TT		Page5 of 28
Filename: J4.SchDoc			

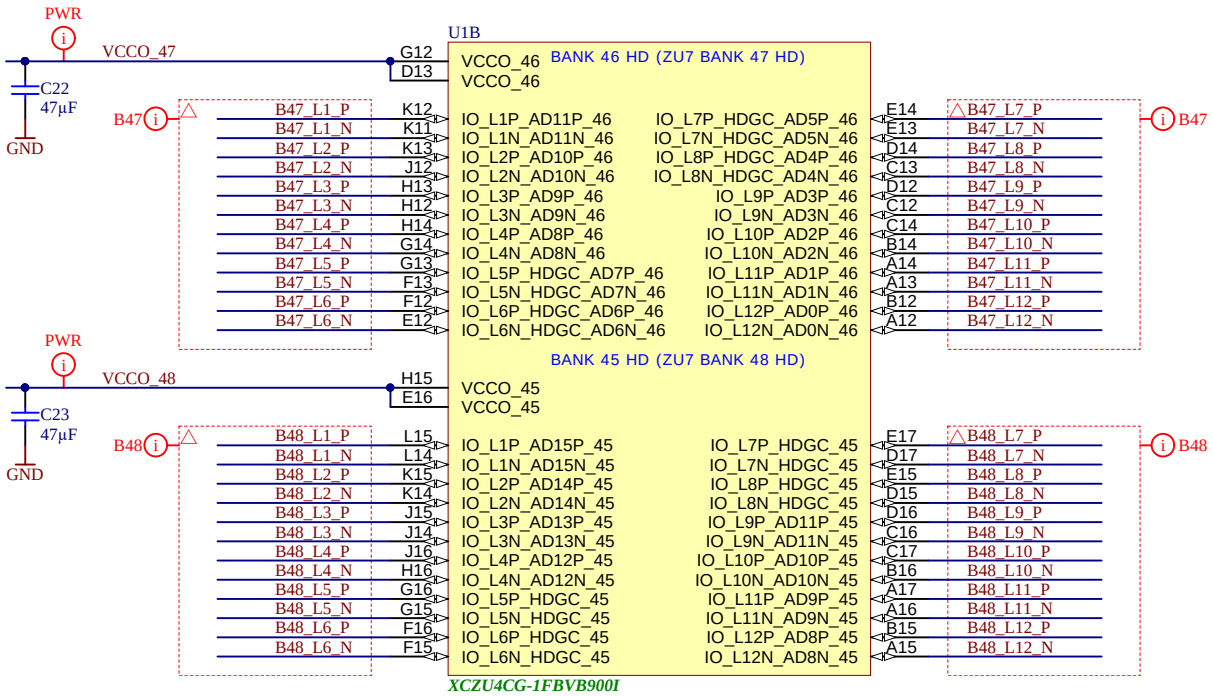

trenz electronic	Title: TE0807 - B47HD and B48HD		
A4	Number: TE0807 4AI21-A		Rev. 02
Date: 2018-07-09	Copyright: Trenz Electronic GmbH / TT		Page6 of 28
Filename: B_HD.SchDoc			

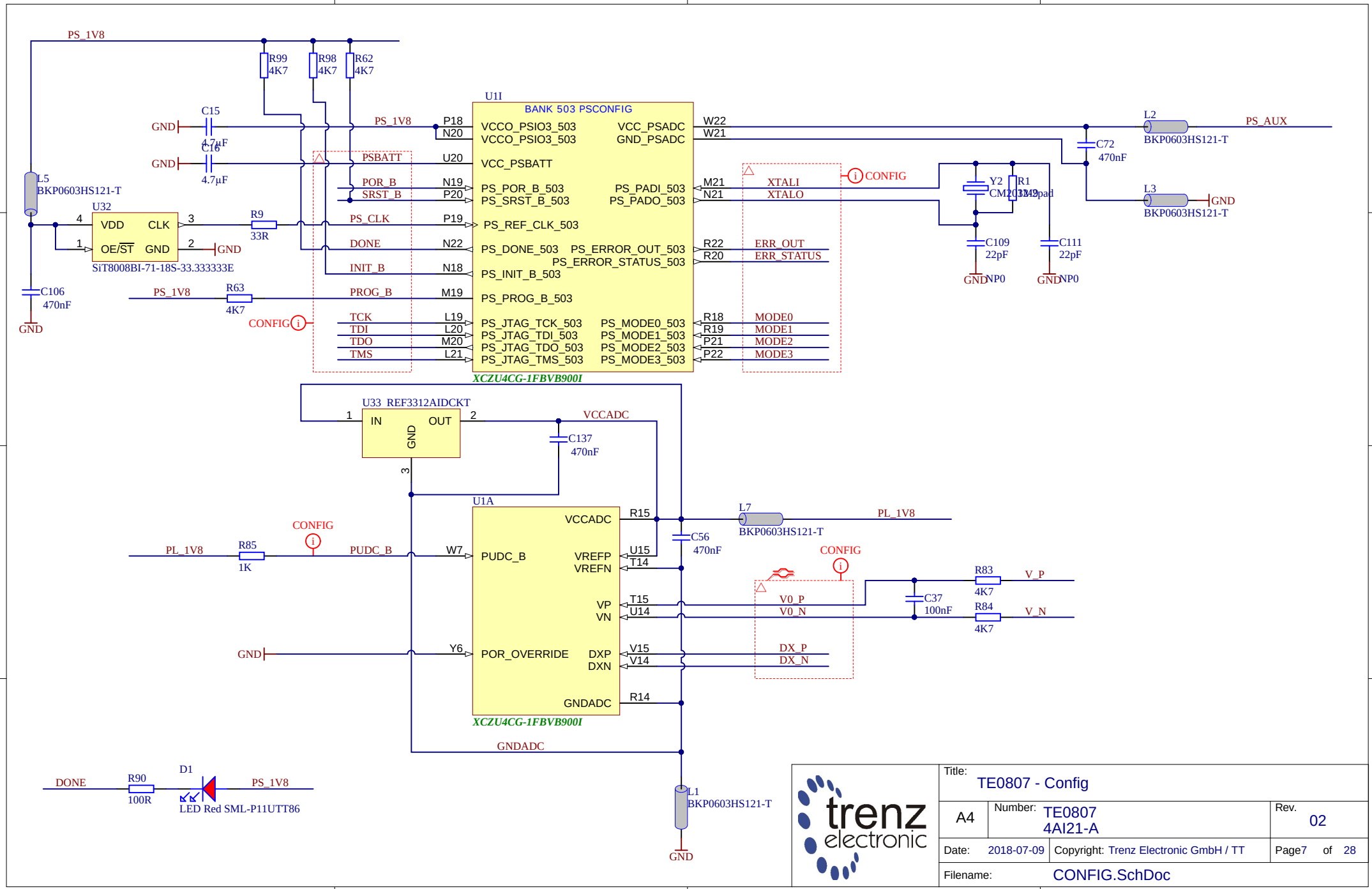
PS_1V8
R99 4K7
R98 4K7
R62 4K7
U1I
BANK 503 PSCONFIG
C15 4.7µF
C16 4.7µF
GND
PSBATT
POR_B
SRST_B
PS_CLK
DONE
INIT_B
PROG_B
TCK
TDI
TDO
TMS
VCCO_PSIO3_503
VCCO_PSIO3_503
VCC_PSADC
GND_PSADC
VCC_PSBATT
PS_POR_B_503
PS_SRST_B_503
PS_PADI_503
PS_PADO_503
PS_REF_CLK_503
PS_DONE_503
PS_ERROR_OUT_503
PS_ERROR_STATUS_503
PS_INIT_B_503
PS_PROG_B_503
PS_JTAG_TCK_503
PS_JTAG_TDI_503
PS_JTAG_TDO_503
PS_JTAG_TMS_503
PS_MODE0_503
PS_MODE1_503
PS_MODE2_503
PS_MODE3_503
XTALI
XTALO
ERR_OUT
ERR_STATUS
MODE0
MODE1
MODE2
MODE3
XCZU4CG-1FBVB900I
L2 BKP0603HS121-T
PS_AUX
C72 470nF
L3 BKP0603HS121-T
Y2 CM2016-49
R1 33pad
C109 22pF
C111 22pF
NP0
CONFIG
L5 BKP0603HS121-T
U32
VDD
CLK
OE/ST
GND
SiT8008BI-71-18S-33.333333E
R9 33R
C106 470nF
R63 4K7
U33 REF3312AIDCKT
IN
OUT
VCCADC
C137 470nF
U1A
VCCADC
PUDC_B
VREFP
VREFN
VP
VN
POR_OVERRIDE
DXP
DXN
GNDADC
XCZU4CG-1FBVB900I
L7 BKP0603HS121-T
PL_1V8
C56 470nF
R85 1K
V0_P
V0_N
DX_P
DX_N
R83 4K7
R84 4K7
C37 100nF
V_P
V_N
GNDADC
DONE
R90 100R
D1
LED Red SML-P11UTT86
L1 BKP0603HS121-T
trenz electronic
Title: TE0807 - Config
A4
Number: TE0807 4AI21-A
Rev. 02
Date: 2018-07-09
Copyright: Trenz Electronic GmbH / TT
Page7 of 28
Filename: CONFIG.SchDoc

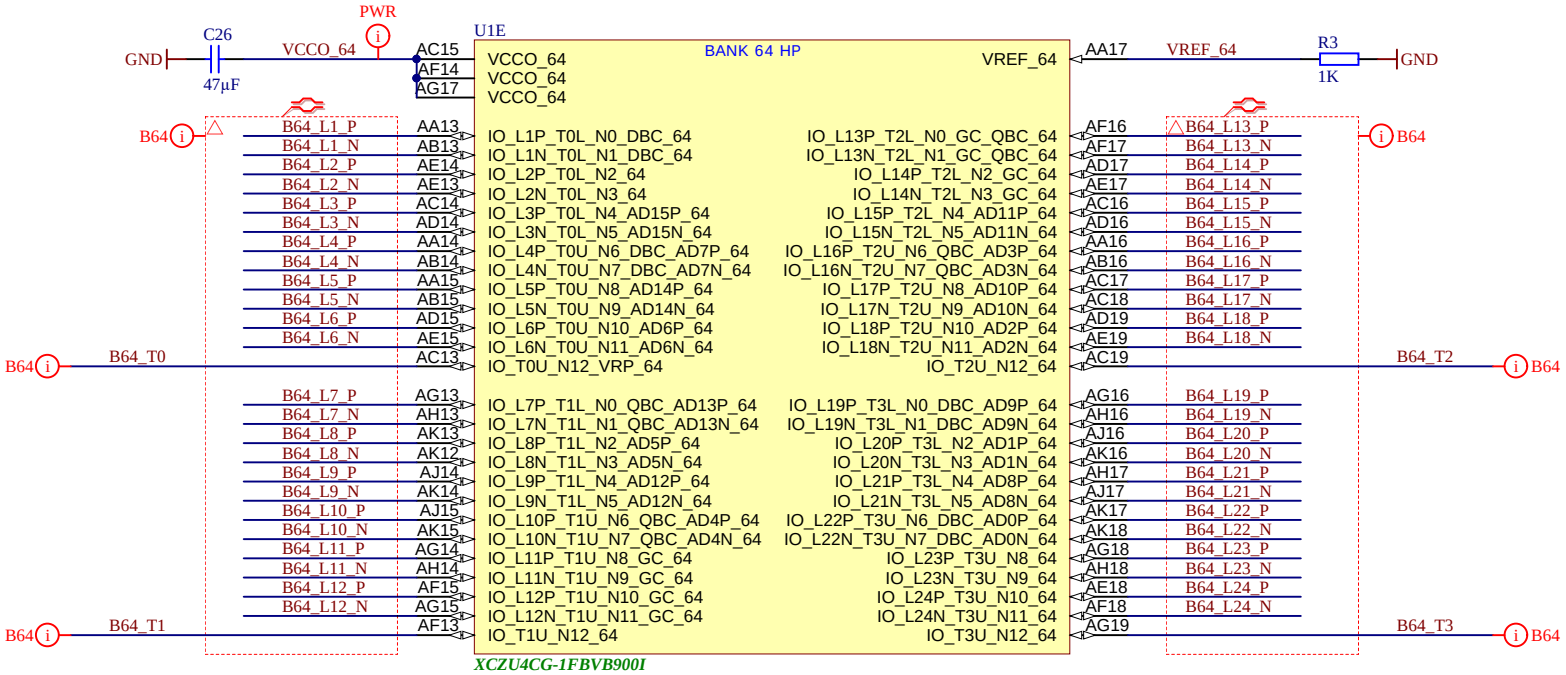

trenz electronic	Title: TE0807 - B64		
A4	Number: TE0807 4AI21-A		Rev. 02
Date: 2018-07-09	Copyright: Trenz Electronic GmbH / TT		Page8 of 28
Filename: B64.SchDoc			

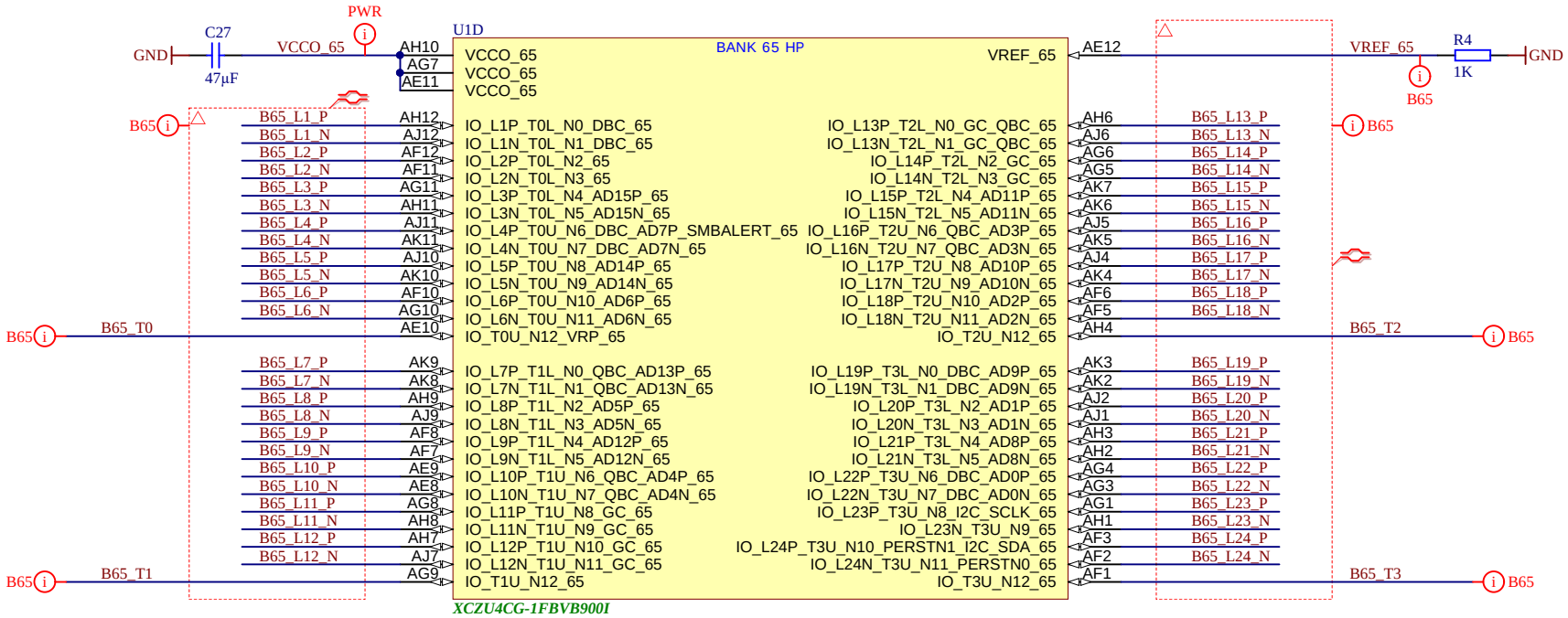

trenz electronic	Title: TE0807 - B65		
A4	Number: TE0807 4AI21-A		Rev. 02
Date: 2018-07-09	Copyright: Trenz Electronic GmbH / TT		Page9 of 28
Filename: B65.SchDoc			

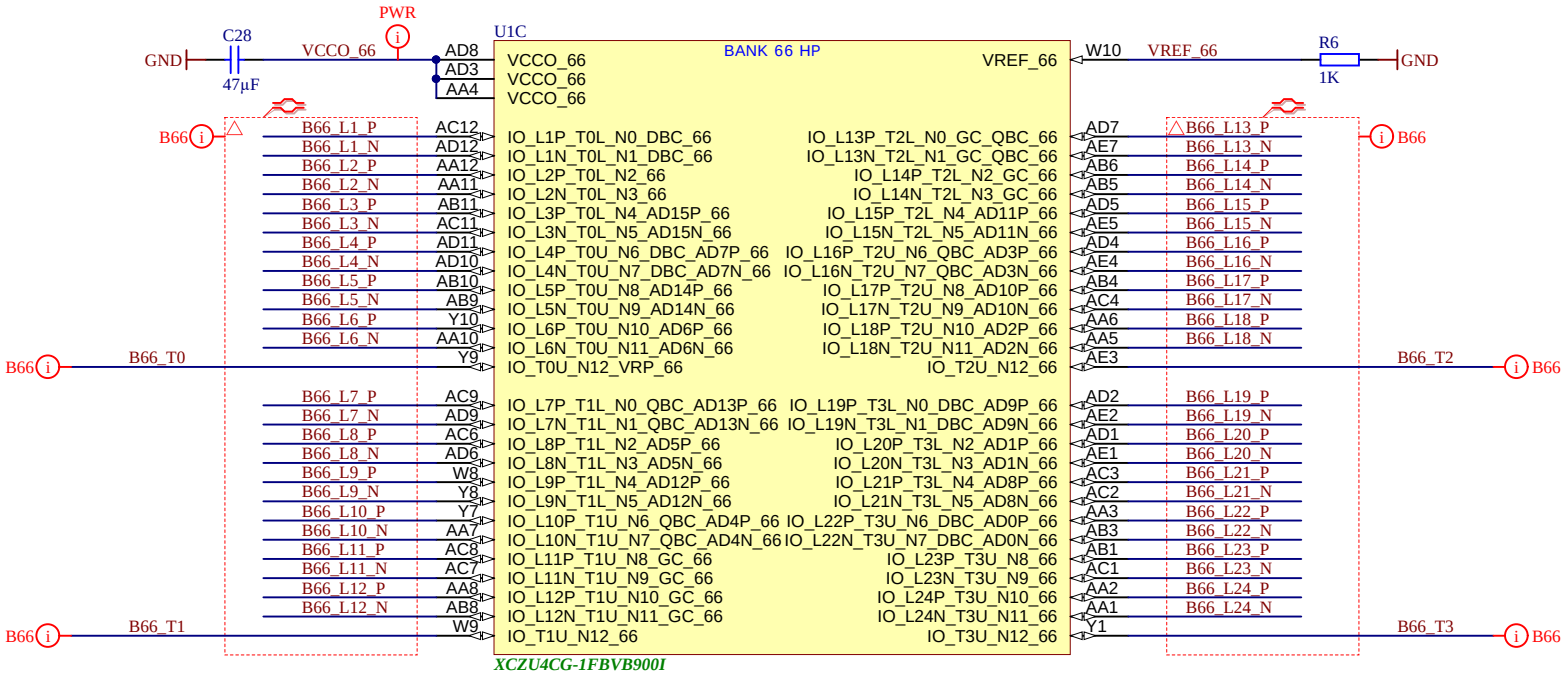

trenz electronic	Title: TE0807 - B66		
A4	Number: TE0807 4AI21-A		Rev. 02
Date: 2018-07-09	Copyright: Trenz Electronic GmbH / TT		Page10 of 28
Filename: B66.SchDoc			

trenz electronic	Title: TE0807 - GTH_Banks		
A4	Number: TE0807 4AI21-A		Rev. 02
Date: 2018-07-09	Copyright: Trenz Electronic GmbH / TT		Page11 of 28
Filename: B_GT.SchDoc			

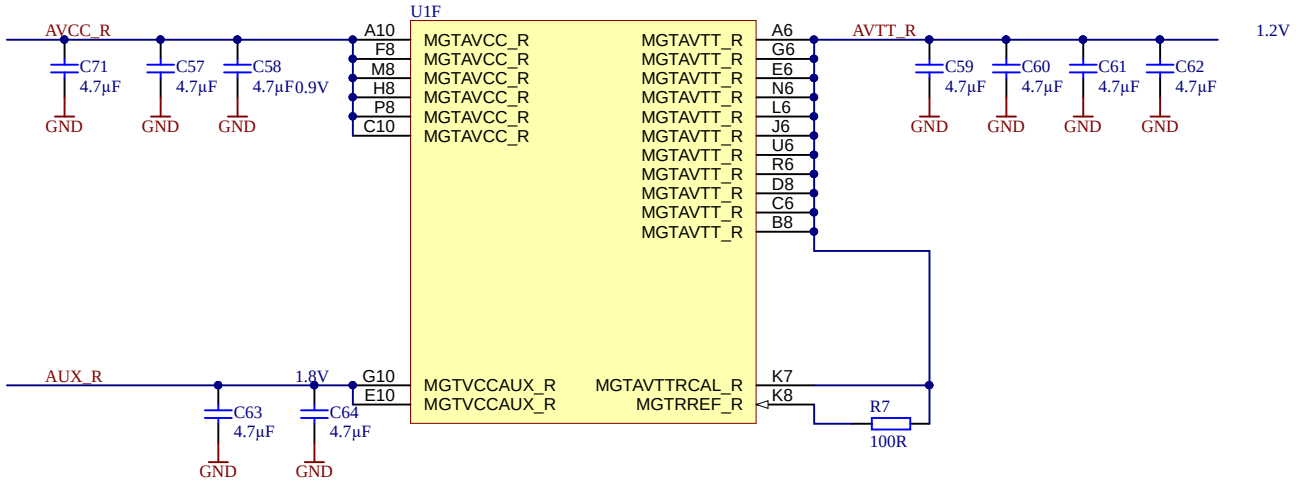

trenz electronic	Title: TE0807 - GTH_PWR		
A4	Number: TE0807 4AI21-A		Rev. 02
Date: 2018-07-09	Copyright: Trenz Electronic GmbH / TT		Page12 of 28
Filename: B_GT_2.SchDoc			

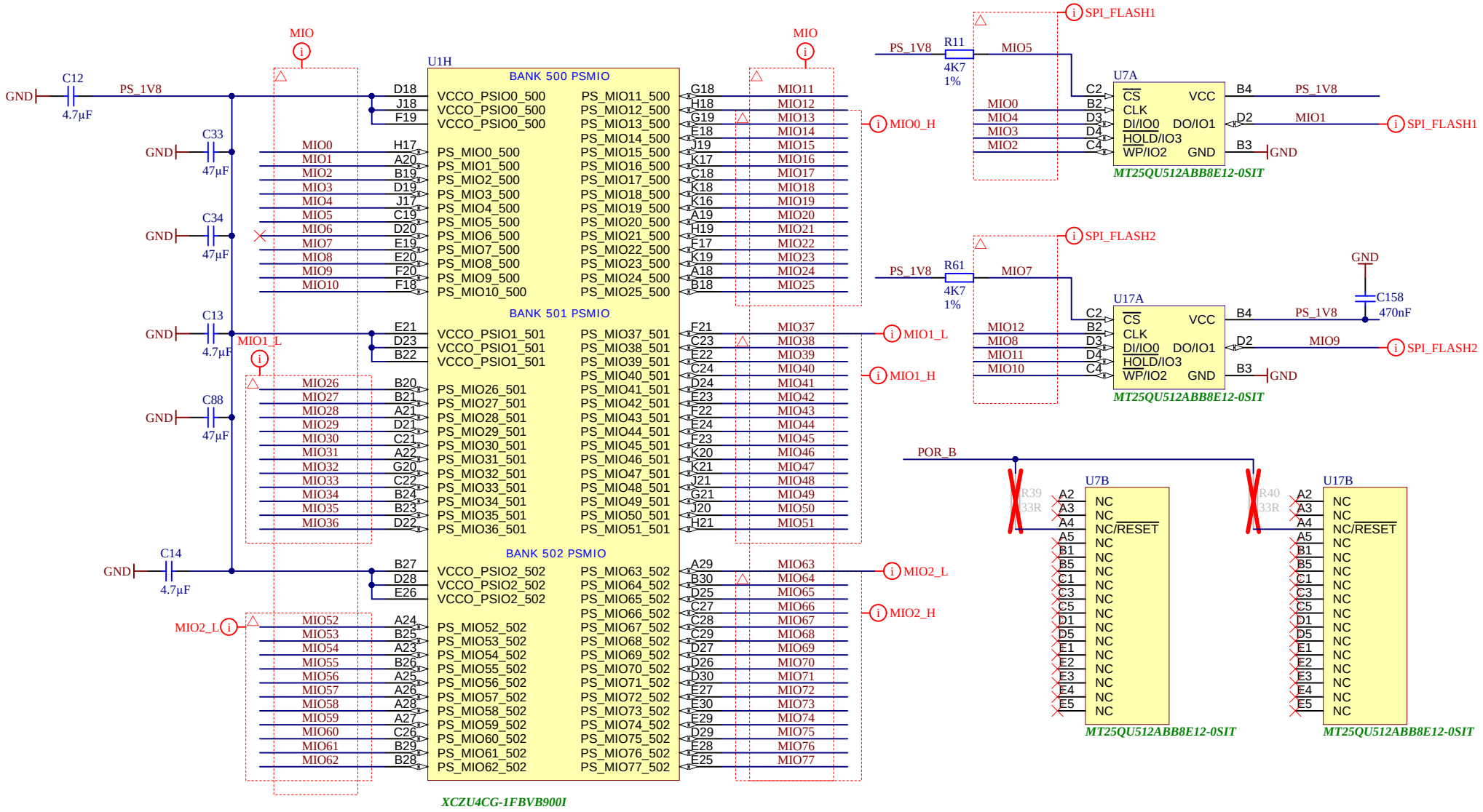

trenz electronic	Title: TE0807 - MIO Banks		
A4	Number: TE0807 4AI21-A		Rev. 02
Date: 2018-07-09	Copyright: Trenz Electronic GmbH / TT		Page13 of 28
Filename: B_MIO.SchDoc			

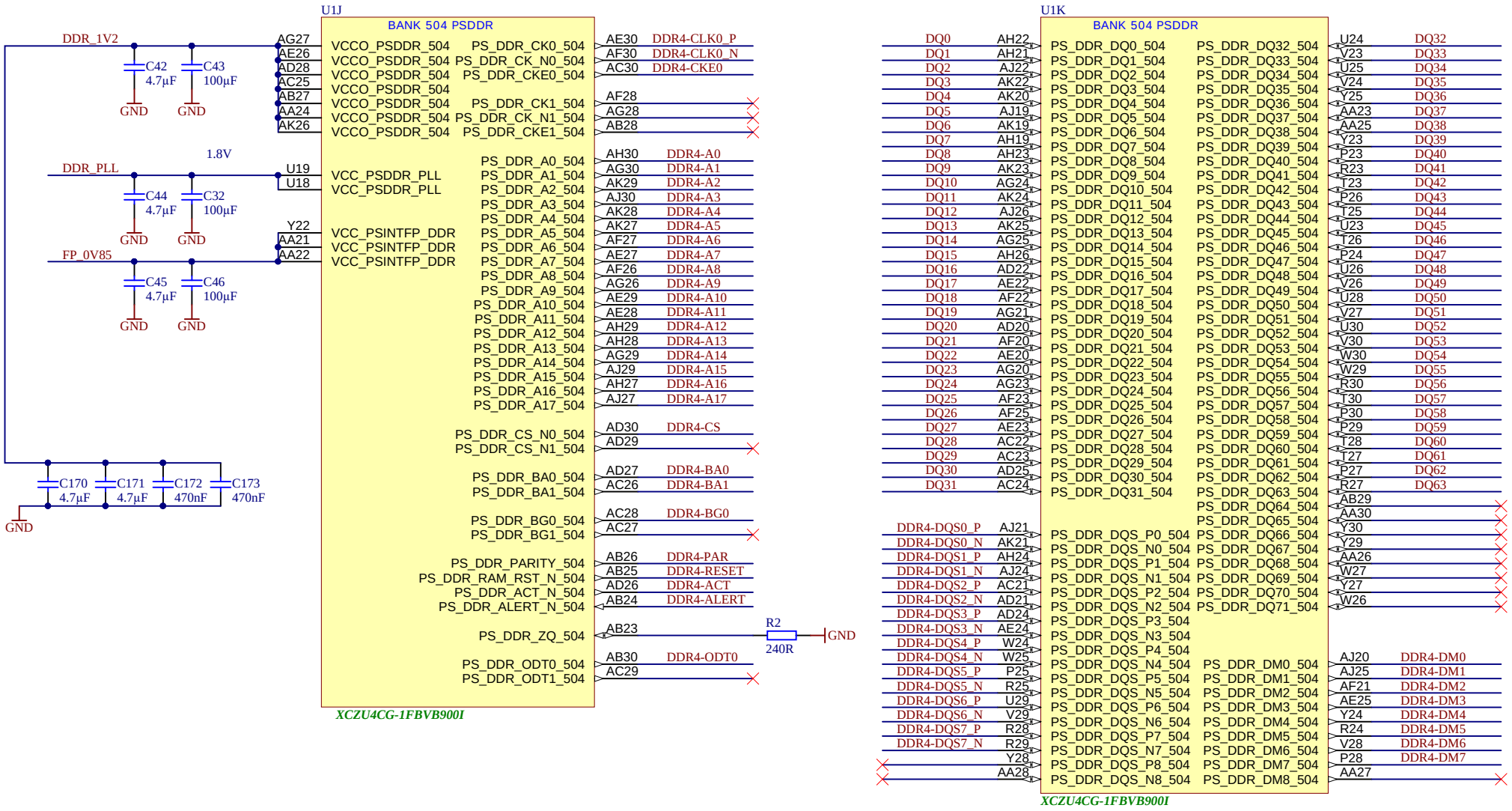

trenz electronic	Title: TE0807 - PS_DDR		
A4	Number: TE0807 4AI21-A		Rev. 02
Date: 2018-07-09	Copyright: Trenz Electronic GmbH / TT		Page14 of 28
Filename: PS_DDR.SchDoc			

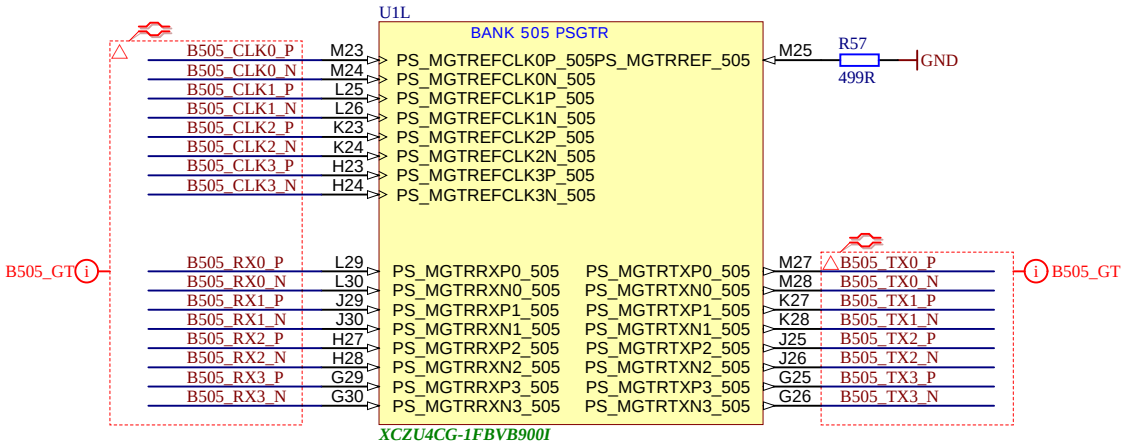

trenz electronic	Title: TE0807 - PS_GT		
A4	Number: TE0807 4AI21-A		Rev. 02
Date: 2018-07-09	Copyright: Trenz Electronic GmbH / TT		Page15 of 28
Filename: B_PS_GT.SchDoc			

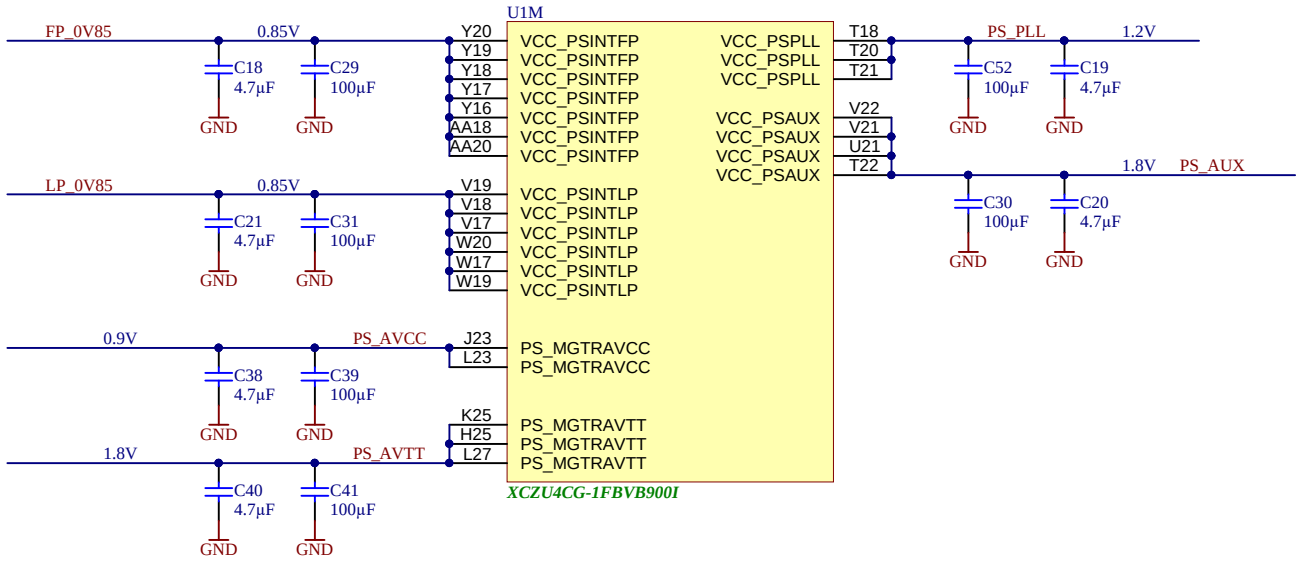

trenz electronic	Title: TE0807 - ZU_PS_POWER		
A4	Number: TE0807 4AI21-A		Rev. 02
Date: 2018-07-09	Copyright: Trenz Electronic GmbH / TT		Page16 of 28
Filename: ZU_PS_POWER.SchDoc			

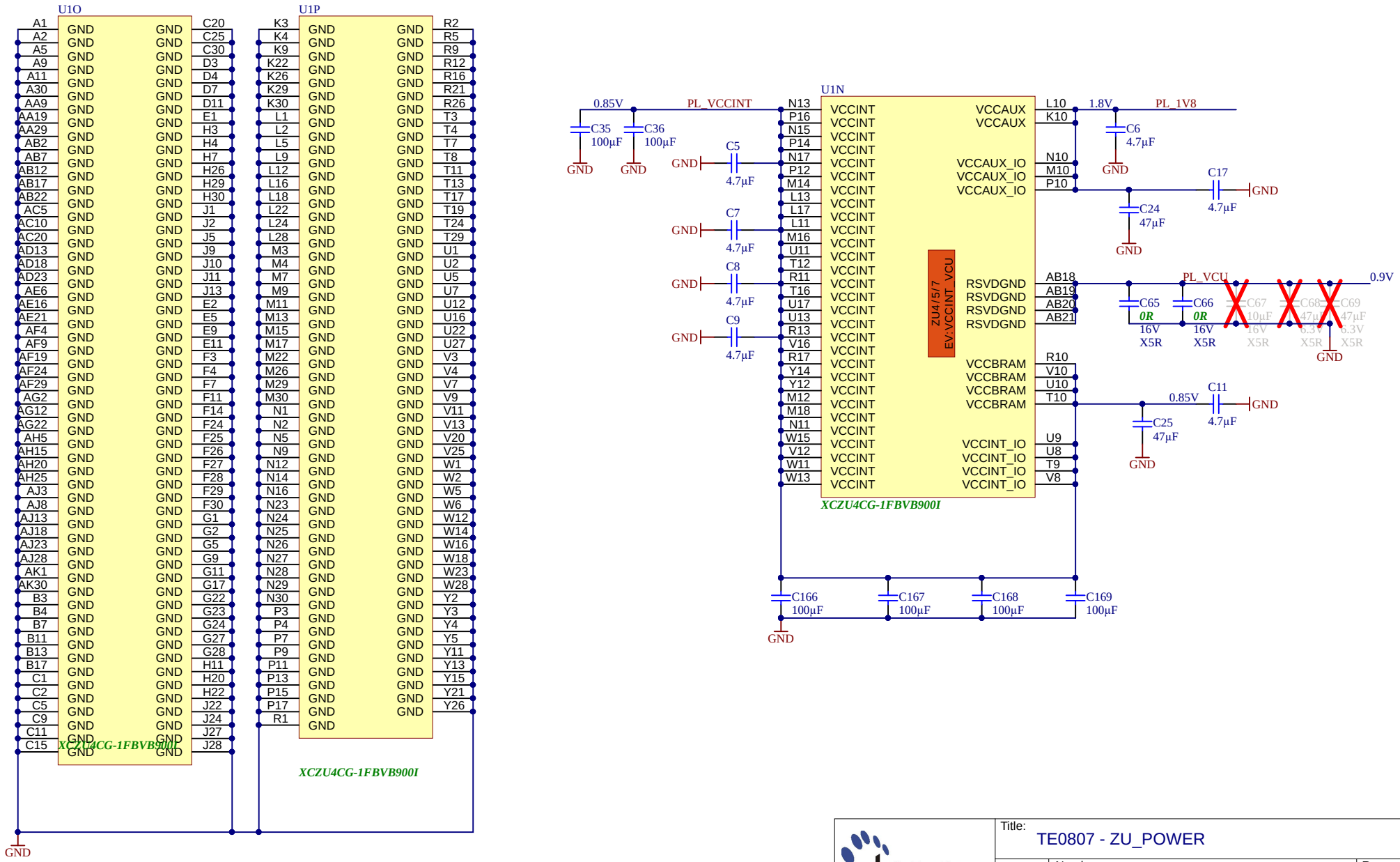

Title: TE0807 - ZU_POWER		
A4	Number: TE0807 4AI21-A	Rev. 02
Date: 2018-07-09	Copyright: Trenz Electronic GmbH / TT	Page17 of 28
Filename: ZU_POWER.SchDoc		

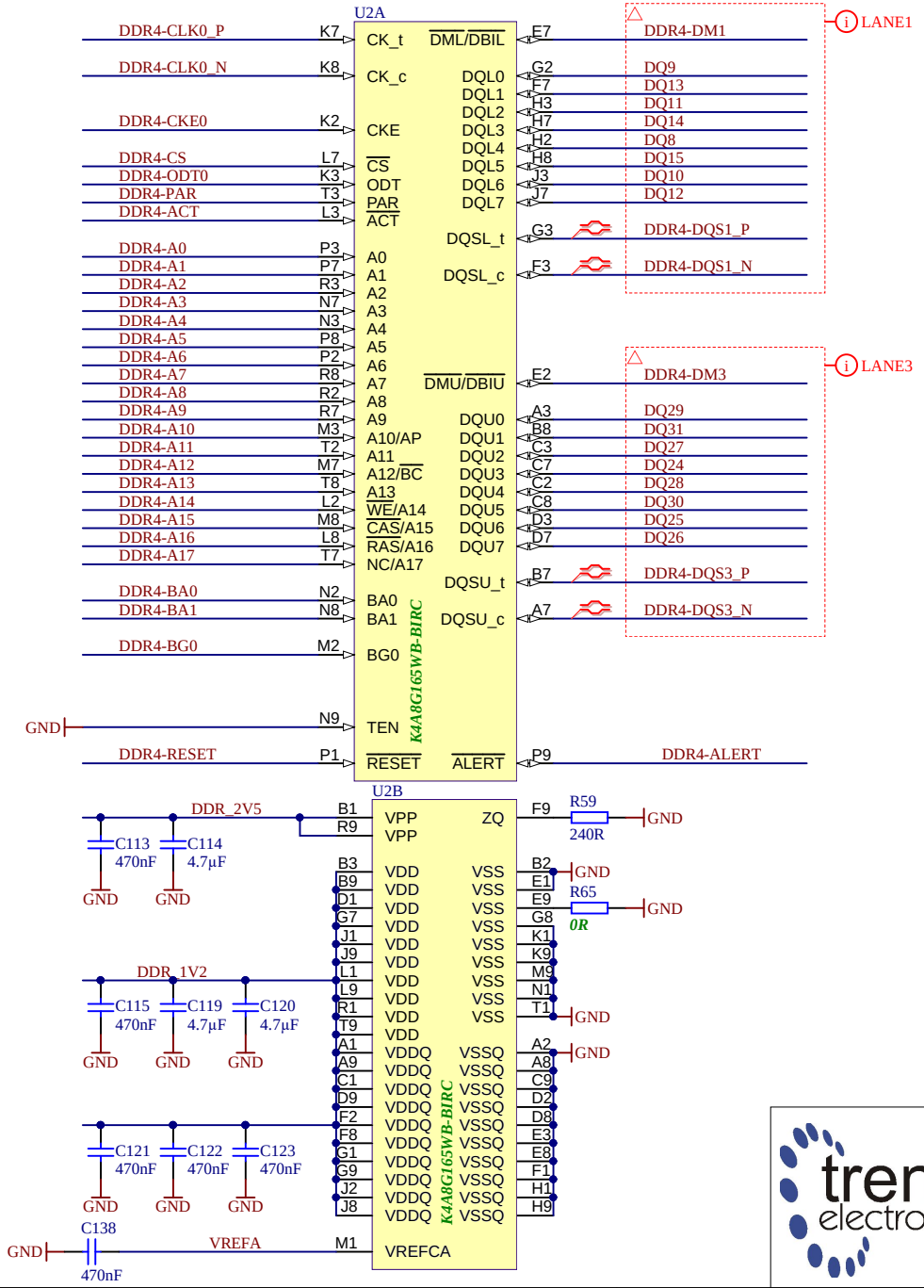

trenz electronic	Title: TE0807 - DDR4_1_RAM		
A4	Number: TE0807 4AI21-A		Rev. 02
Date: 2018-07-09	Copyright: Trenz Electronic GmbH / TT		Page18 of 28
Filename: DDR4-RAM.SchDoc			

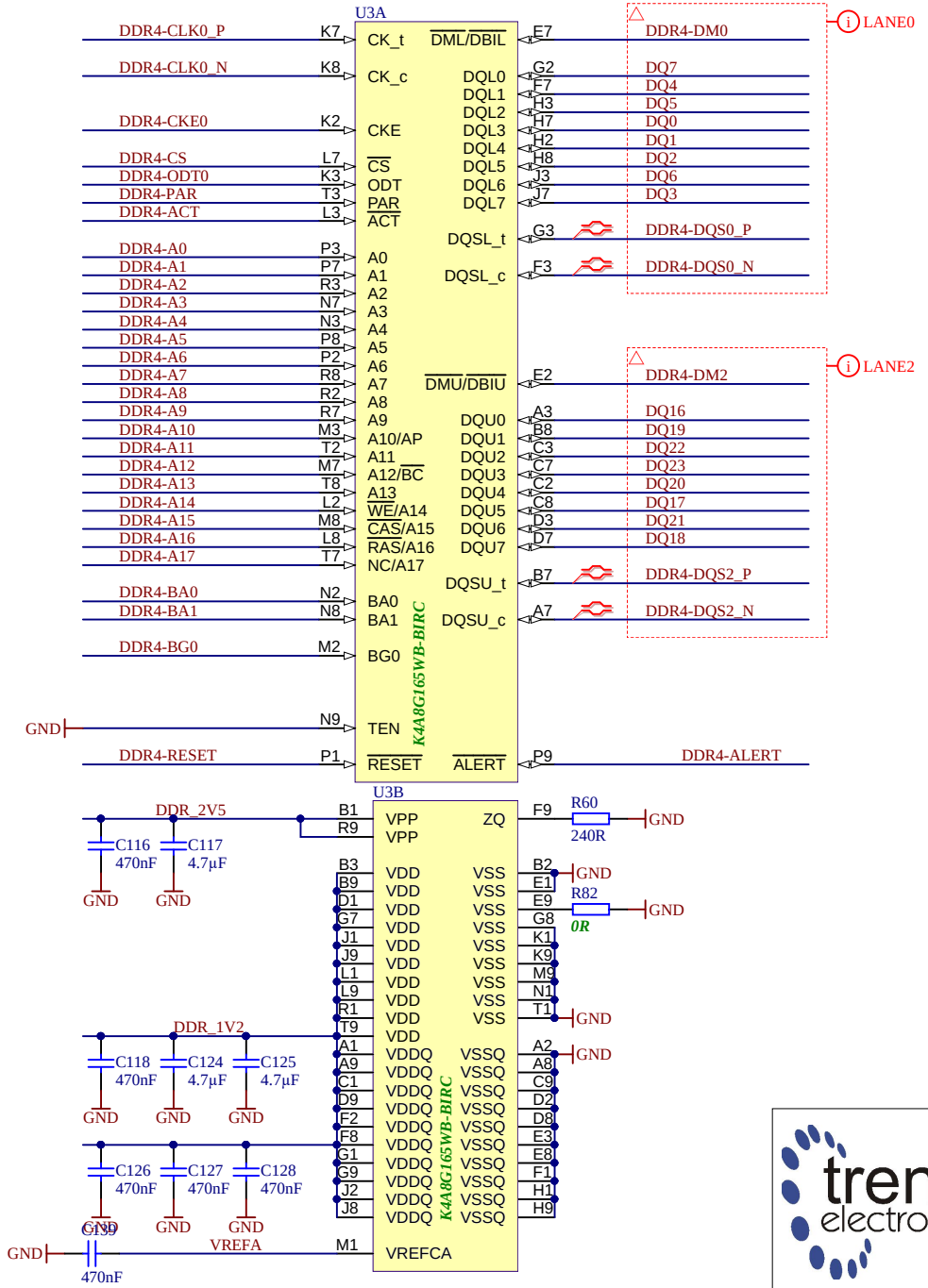

trenz electronic	Title: TE0807 - DDR4_2_RAM		
A4	Number: TE0807 4AI21-A		Rev. 02
Date: 2018-07-09	Copyright: Trenz Electronic GmbH / TT		Page19 of 28
Filename: DDR4-RAM_2.SchDoc			

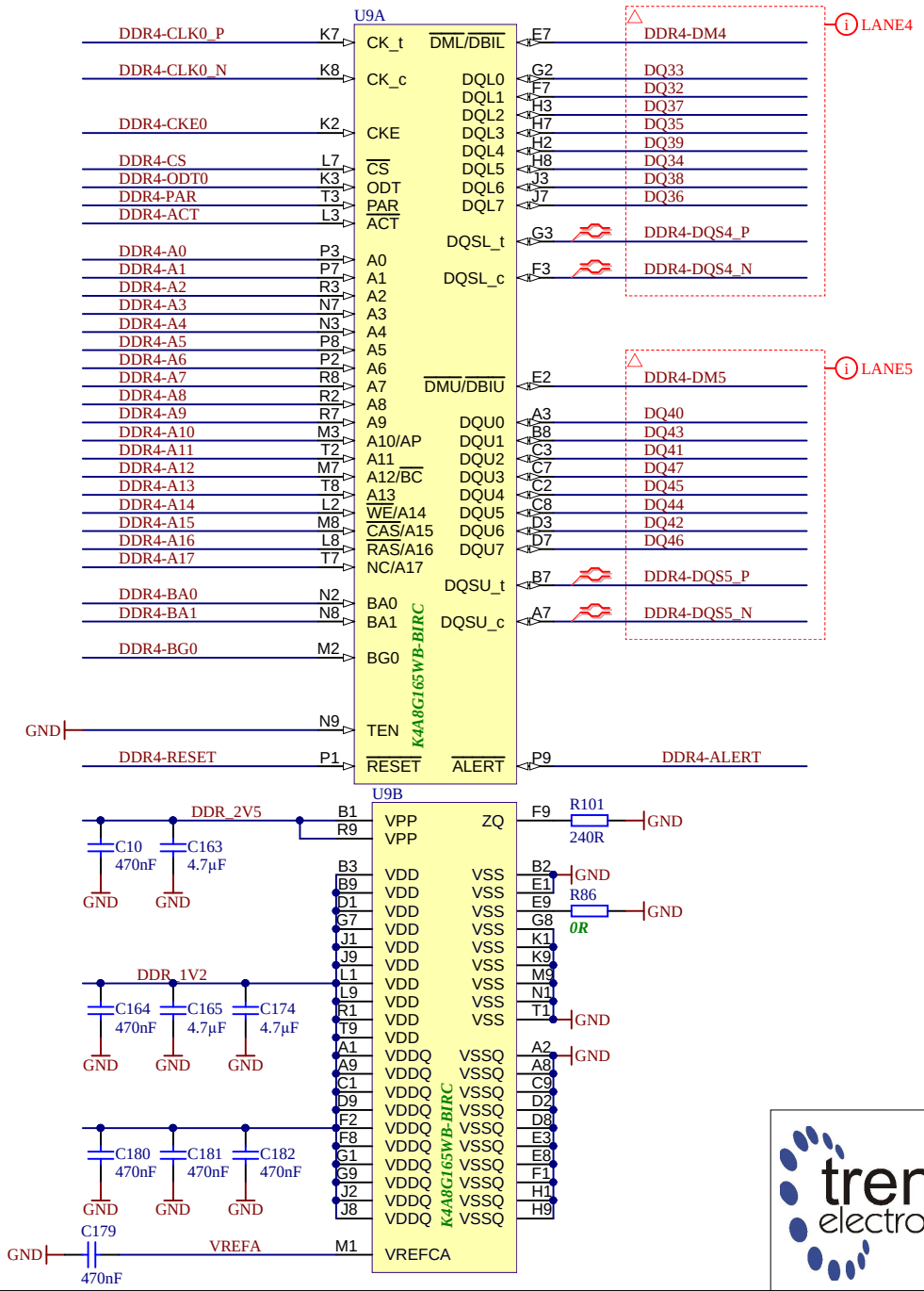

trenz electronic	Title: TE0807 - DDR4_3_RAM		
A4	Number: TE0807 4AI21-A		Rev. 02
Date: 2018-07-09	Copyright: Trenz Electronic GmbH / TT		Page20 of 28
Filename: DDR4-RAM_3.SchDoc			

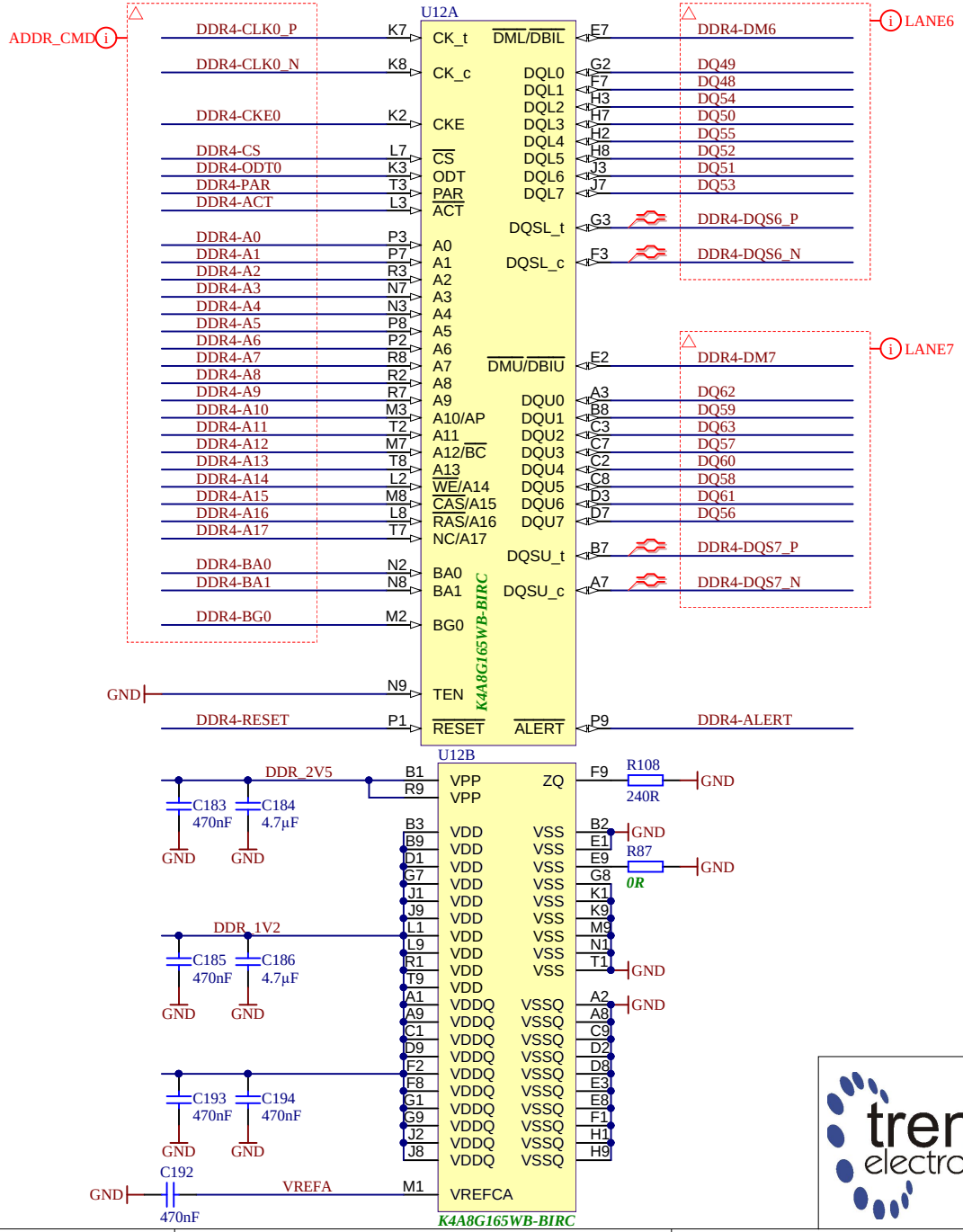

trenz electronic	Title: TE0807 - DDR4_4_RAM		
A4	Number: TE0807 4AI21-A		Rev. 02
Date: 2018-07-09	Copyright: Trenz Electronic GmbH / TT		Page21 of 28
Filename: DDR4-RAM_4.SchDoc			

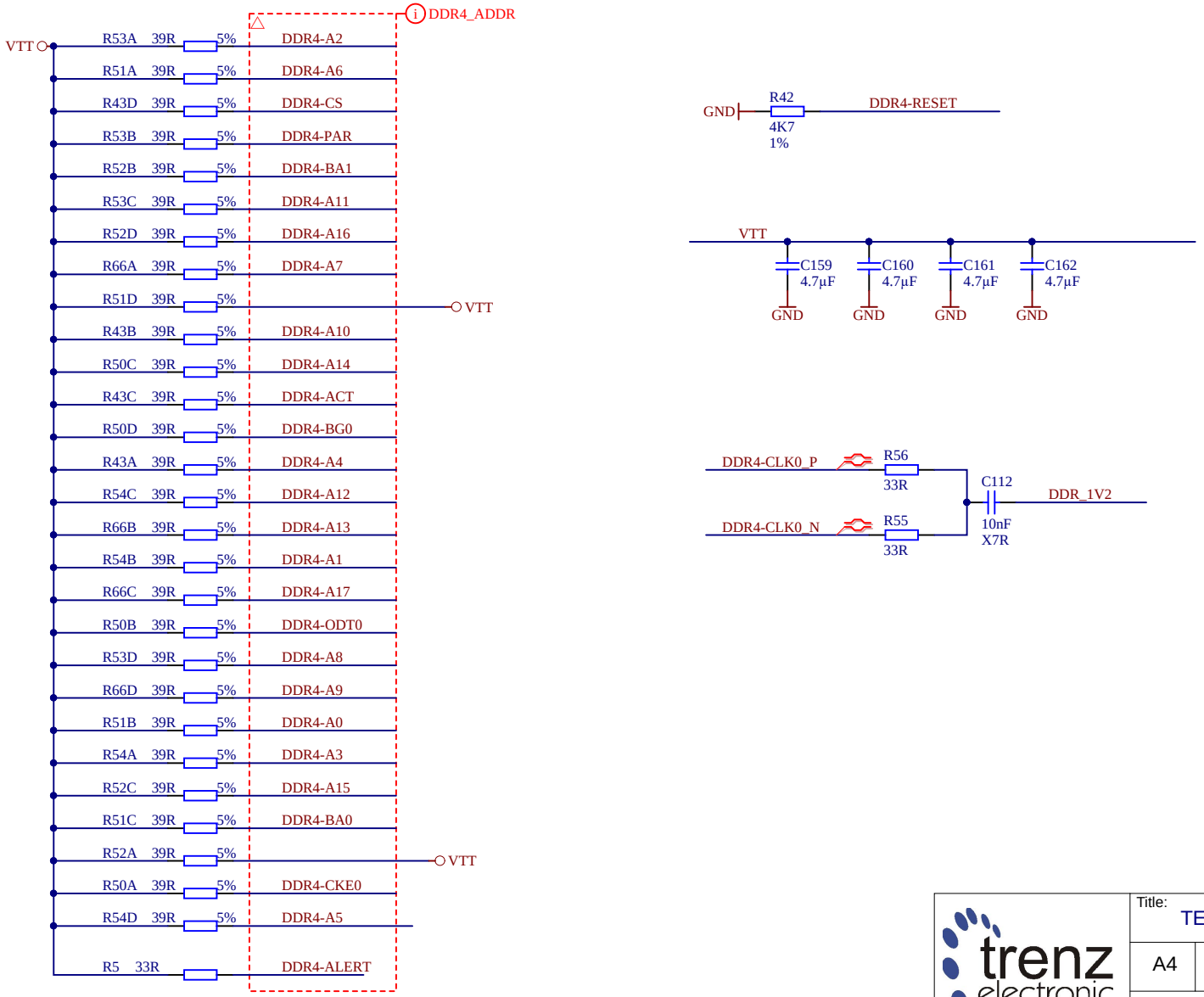

trenz electronic	Title: TE0807 - DDR4_TERM		
A4	Number: TE0807 4AI21-A		Rev. 02
Date: 2018-07-09	Copyright: Trenz Electronic GmbH / TT		Page22 of 28
Filename: DDR4-TERM.SchDoc			

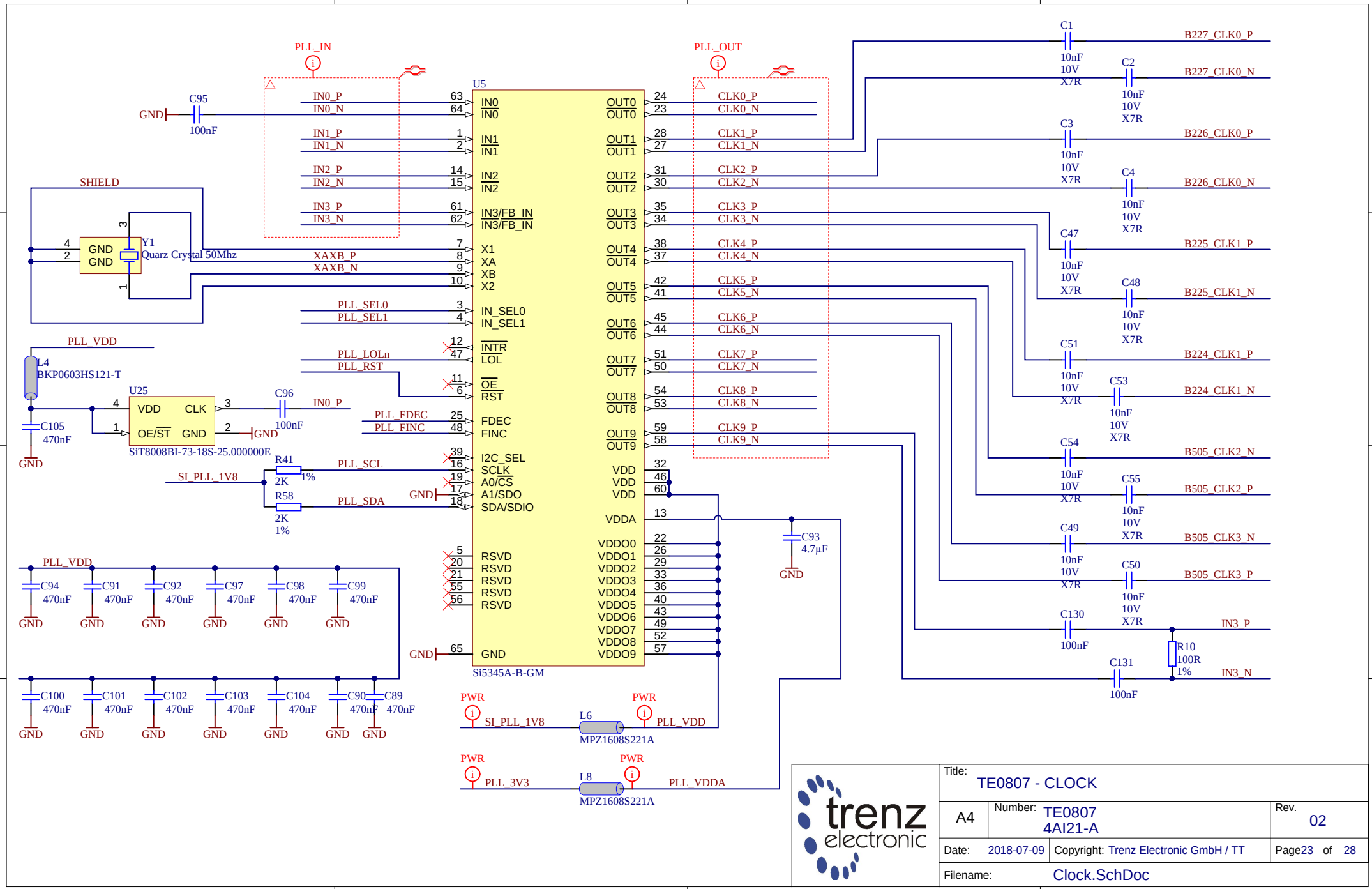

Title: TE0807 - CLOCK			
A4	Number: TE0807 4AI21-A		Rev. 02
Date: 2018-07-09	Copyright: Trenz Electronic GmbH / TT		Page23 of 28
Filename: Clock.SchDoc			

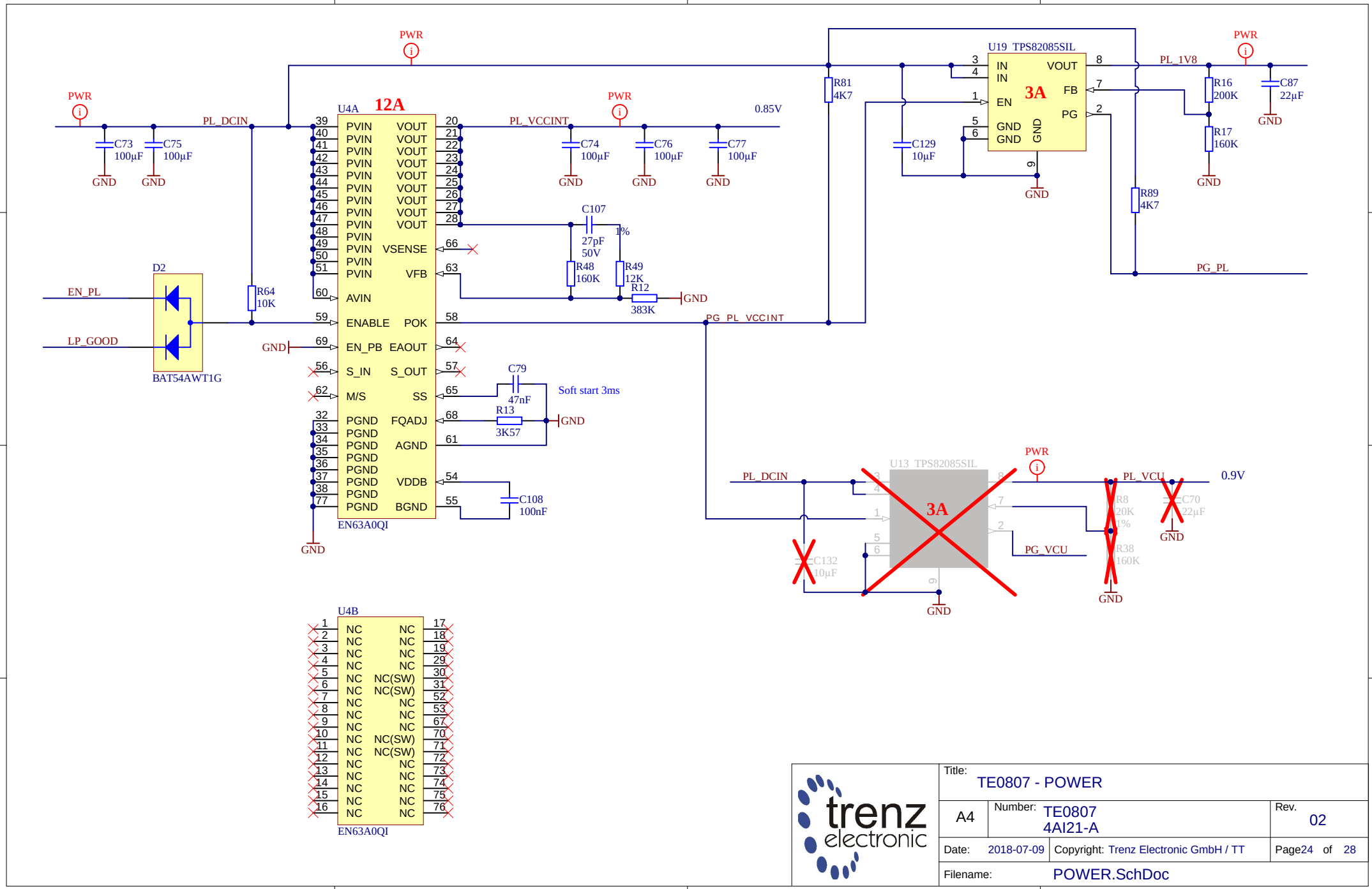
PWR
PL_DCIN
C73 100µF
C75 100µF
GND
U4A
12A
PVIN VOUT VSENSE VFB AVIN ENABLE POK EN_PB EAOUT S_IN S_OUT M/S SS PGND FQADJ AGND VDDB BGND
EN63A0QI
PL_VCCINT
C74 100µF
C76 100µF
C77 100µF
0.85V
C107 27pF 50V 1%
R48 160K
R49 12K
R12 383K
PG_PL_VCCINT
R81 4K7
U19 TPS82085SIL
IN IN EN GND GND VOUT FB PG
3A
C129 10µF
PL_1V8
R16 200K
R17 160K
C87 22µF
R89 4K7
PG_PL
D2
BAT54AWT1G
EN_PL
LP_GOOD
R64 10K
C79 47nF
R13 3K57
Soft start 3ms
C108 100nF
U4B
NC NC(SW)
EN63A0QI
U13 TPS82085SIL
PL_VCU
0.9V
R8 20K 1%
R38 160K
C70 22µF
C132 10µF
PG_VCU
trenz electronic
Title: TE0807 - POWER
A4
Number: TE0807 4AI21-A
Rev. 02
Date: 2018-07-09
Copyright: Trenz Electronic GmbH / TT
Page24 of 28
Filename: POWER.SchDoc

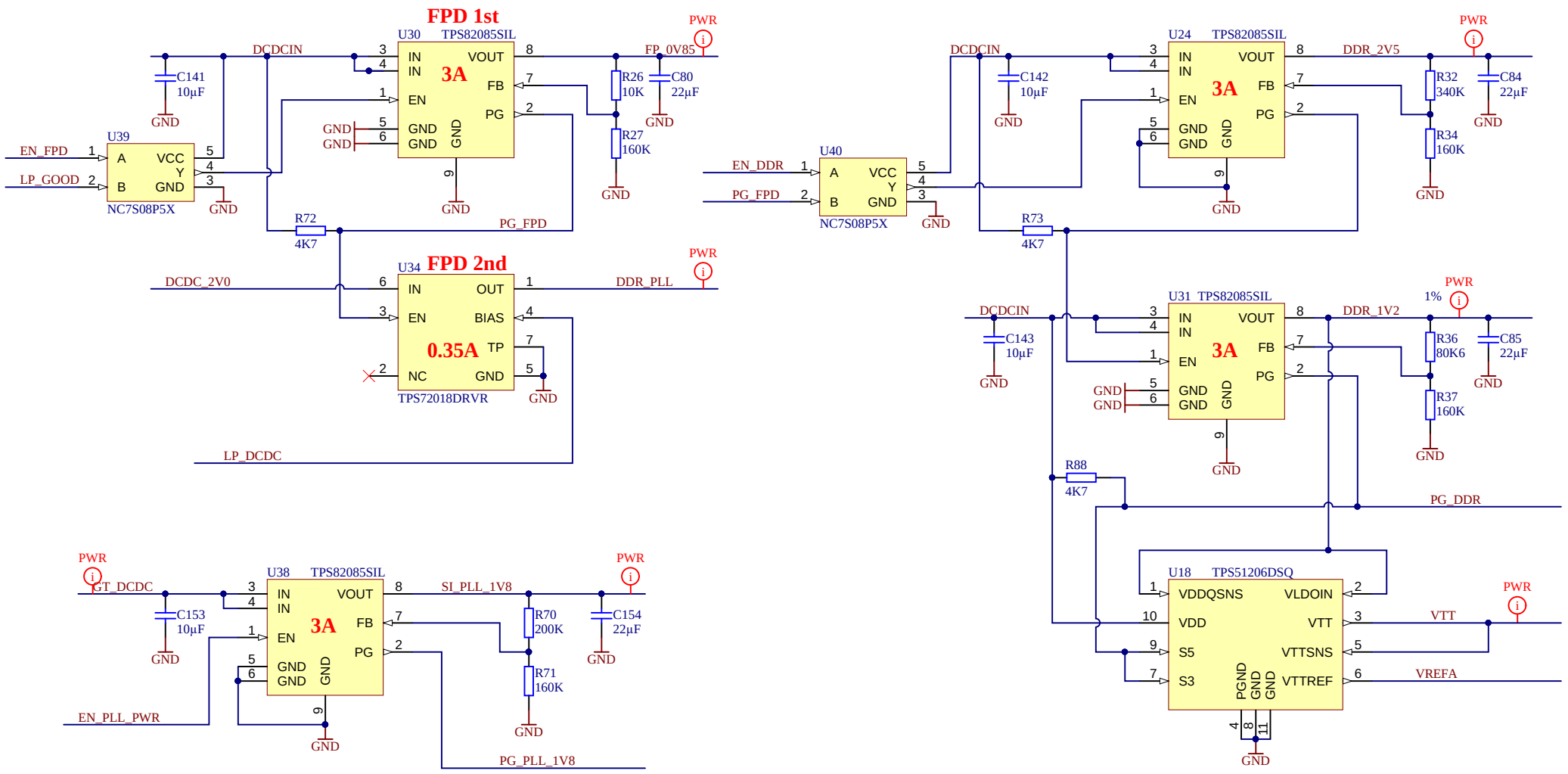

trenz electronic	Title: TE0807 - POWER_2		
A4	Number: TE0807 4AI21-A		Rev. 02
Date: 2018-07-09	Copyright: Trenz Electronic GmbH / TT		Page25 of 28
Filename: POWER_2.SchDoc			

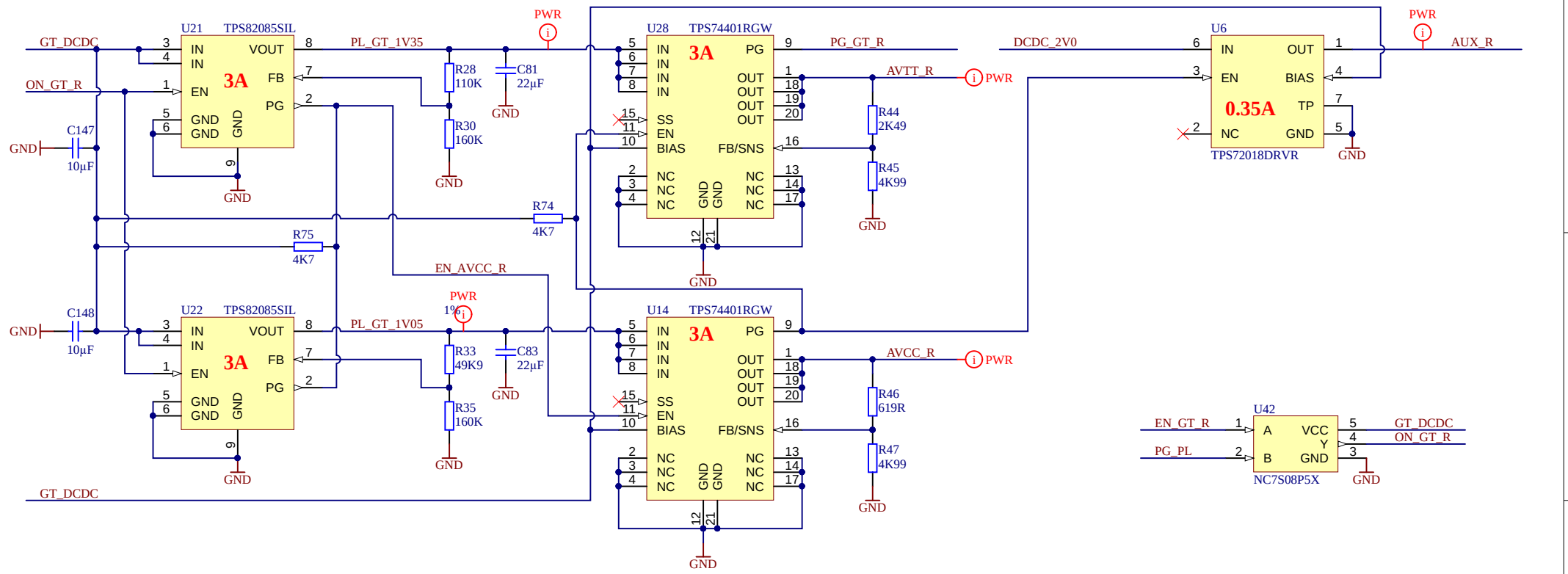

trenz electronic	Title: TE0807 - POWER_3		
A4	Number: TE0807 4AI21-A		Rev. 02
Date: 2018-07-09	Copyright: Trenz Electronic GmbH / TT		Page26 of 28
Filename: POWER_3.SchDoc			

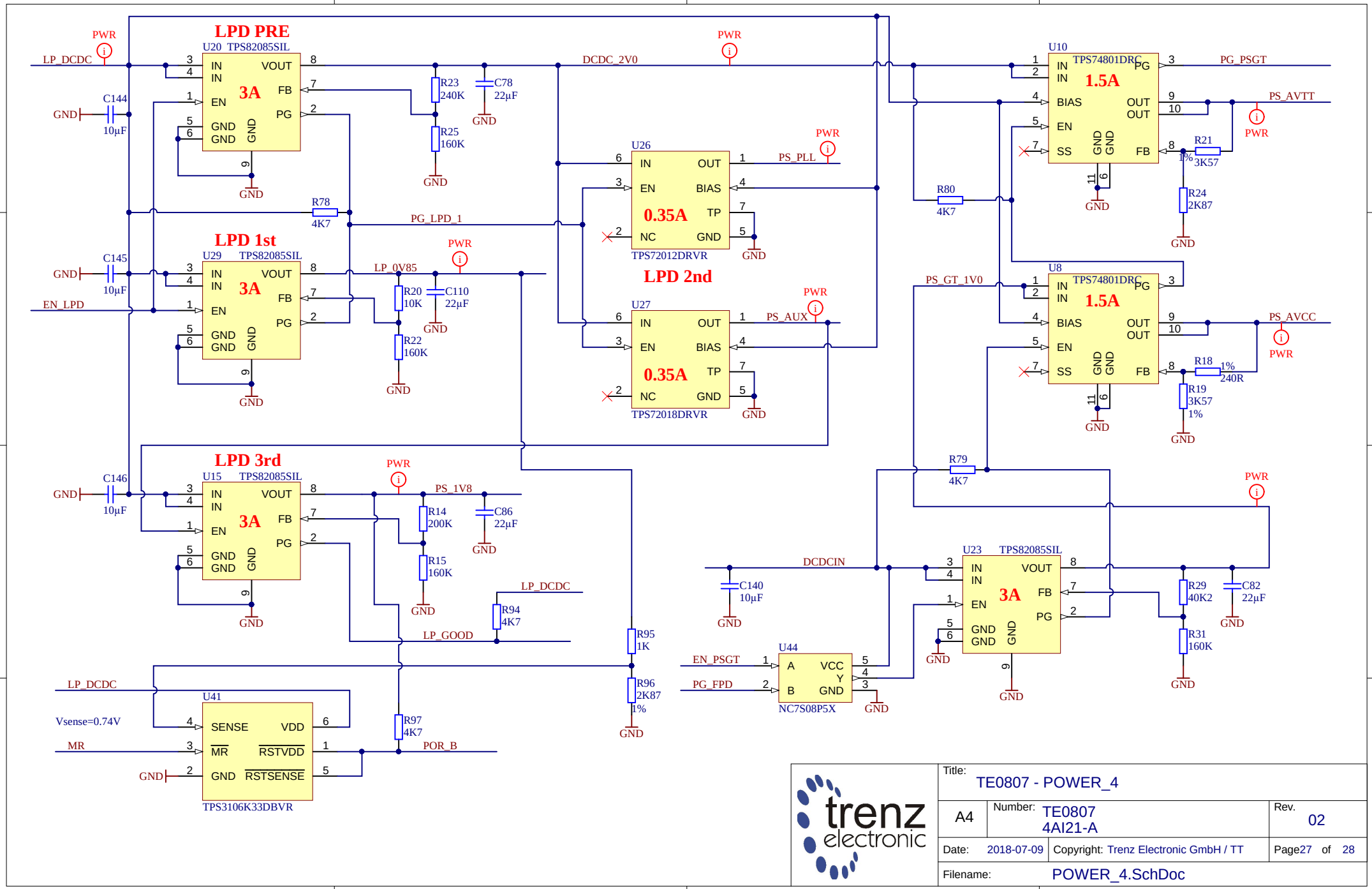
LPD PRE
U20 TPS82085SIL
3A
LP_DCDC
DCDC_2V0
PWR
C144
10µF
GND
R23
240K
R25
160K
C78
22µF
R78
4K7
PG_LPD_1
LPD 1st
U29 TPS82085SIL
C145
EN_LPD
LP_0V85
R20
10K
R22
160K
C110
22µF
U26
0.35A
TPS72012DRVR
PS_PLL
LPD 2nd
U27
TPS72018DRVR
PS_AUX
U10
TPS74801DRC
1.5A
PG_PSGT
PS_AVTT
R21
3K57
R24
2K87
R80
4K7
U8
PS_GT_1V0
PS_AVCC
R18
240R
R19
3K57
R79
4K7
LPD 3rd
U15 TPS82085SIL
C146
PS_1V8
R14
200K
R15
160K
C86
22µF
R94
4K7
LP_GOOD
R95
1K
R96
2K87
1%
U41
TPS3106K33DBVR
Vsense=0.74V
MR
R97
4K7
POR_B
DCDCIN
C140
10µF
U23 TPS82085SIL
R29
40K2
R31
160K
C82
22µF
U44
NC7S08P5X
EN_PSGT
PG_FPD
trenz electronic
Title:
TE0807 - POWER_4
A4
Number:
TE0807
4AI21-A
Rev.
02
Date:
2018-07-09
Copyright: Trenz Electronic GmbH / TT
Page27 of 28
Filename:
POWER_4.SchDoc

CHANGES REV01 to REV02
---
1) Added EEPROM (U11,24AA025E48T-I/OT)
2) Added optional resistors R39/R40 for QSPI flash (do not populated)
3) Fixed VCU connection (added additional DCDC and capacitors), recommendation from Xilinx
4) Changed obsolete DDR4 chips (NT5AD256M16B2-GN -> K4A8G165WB-BIRC)
5) Added net "PG_VCU" to J2 (pin97)
6) full update lib

trenz electronic	Title: TE0807 - Changes list		
A4	Number: TE0807 4AI21-A		Rev. 02
Date: 2018-07-09	Copyright: Trenz Electronic GmbH		Page28 of 28
Filename: Revision_Changes.SchDoc			