U_J1
J1.SchDoc

U_J2
J2.SchDoc

U_J3
J3.SchDoc

U_J4
J4.SchDoc

U_DDR4-TERM
DDR4-TERM.SchDoc

U_B64
B64.SchDoc

U_B65
B65.SchDoc

U_B66
B66.SchDoc

U_B_GT
B_GT.SchDoc

U_B_GT_2
B_GT_2.SchDoc

U_B_PS_GT
B_PS_GT.SchDoc

U_PS_DDR
PS_DDR.SchDoc

U_B_MIO
B_MIO.SchDoc

U_B_HD
B_HD.SchDoc

U_Clock
Clock.SchDoc

U_CONFIG
CONFIG.SchDoc

U_DDR4-RAM
DDR4-RAM.SchDoc

U_DDR4-RAM_2
DDR4-RAM_2.SchDoc

U_DDR4-RAM_3
DDR4-RAM_3.SchDoc

U_DDR4-RAM_4
DDR4-RAM_4.SchDoc

U_DDR4-TERM
DDR4-TERM.SchDoc

U_ZU_POWER
ZU_POWER.SchDoc

U_ZU_PS_POWER
ZU_PS_POWER.SchDoc

U_POWER
POWER.SchDoc

U_POWER_2
POWER_2.SchDoc

U_POWER_3.
POWER_3.SchDoc

U_POWER_4
POWER_4.SchDoc

GND
Mount.Hole 3.2mm für Unterlegscheibe

GND
Mount.Hole 3.2mm für Unterlegscheibe

GND
Mount.Hole 3.2mm für Unterlegscheibe

GND
Mount.Hole 3.2mm für Unterlegscheibe

GND
Mount.Hole 3.2mm für Unterlegscheibe

GND
Mount.Hole 3.2mm für Unterlegscheibe

GND
Mount.Hole 3.2mm für Unterlegscheibe

GND
Mount.Hole 3.2mm für Unterlegscheibe

LOGO1
TE Logo PRINT Layer
LOGO PRINT

FIDU-DOT - small
PM1

FIDU-DOT - small
PM2

FIDU-DOT - small
PM3

FIDU-DOT - small
PM4

FIDU-DOT - small
PM5

FIDU-DOT - small
PM6

Serial
Serial
Serialnumber 6,3 x 6.3mm

trenz electronic	Title: TE0808		
	A4	Number: TE0808 1EA	Rev. 04
	Date: 2017-01-27	Copyright: Trenz Electronic GmbH / TT	Page1 of 28
	Filename: TE0808.SchDoc		

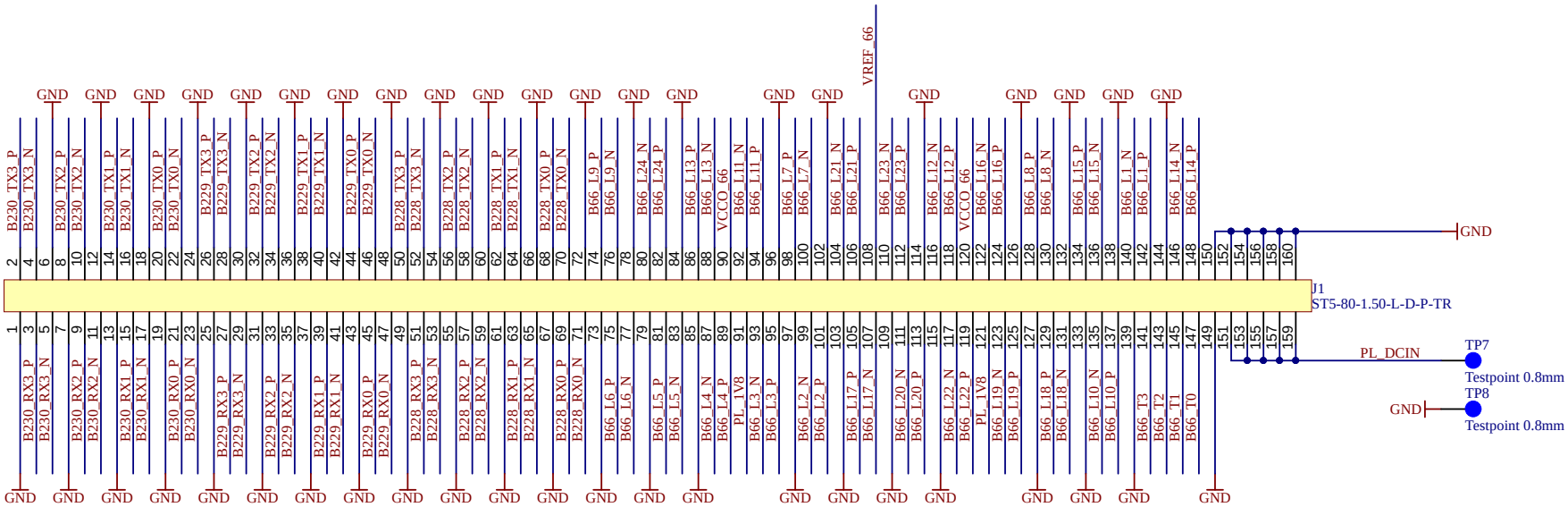

trenz electronic	Title: TE0808 - Connector J1		
A4	Number: TE0808 1EA		Rev. 04
Date: 2017-01-27	Copyright: Trenz Electronic GmbH / TT		Page2 of 28
Filename: J1.SchDoc			

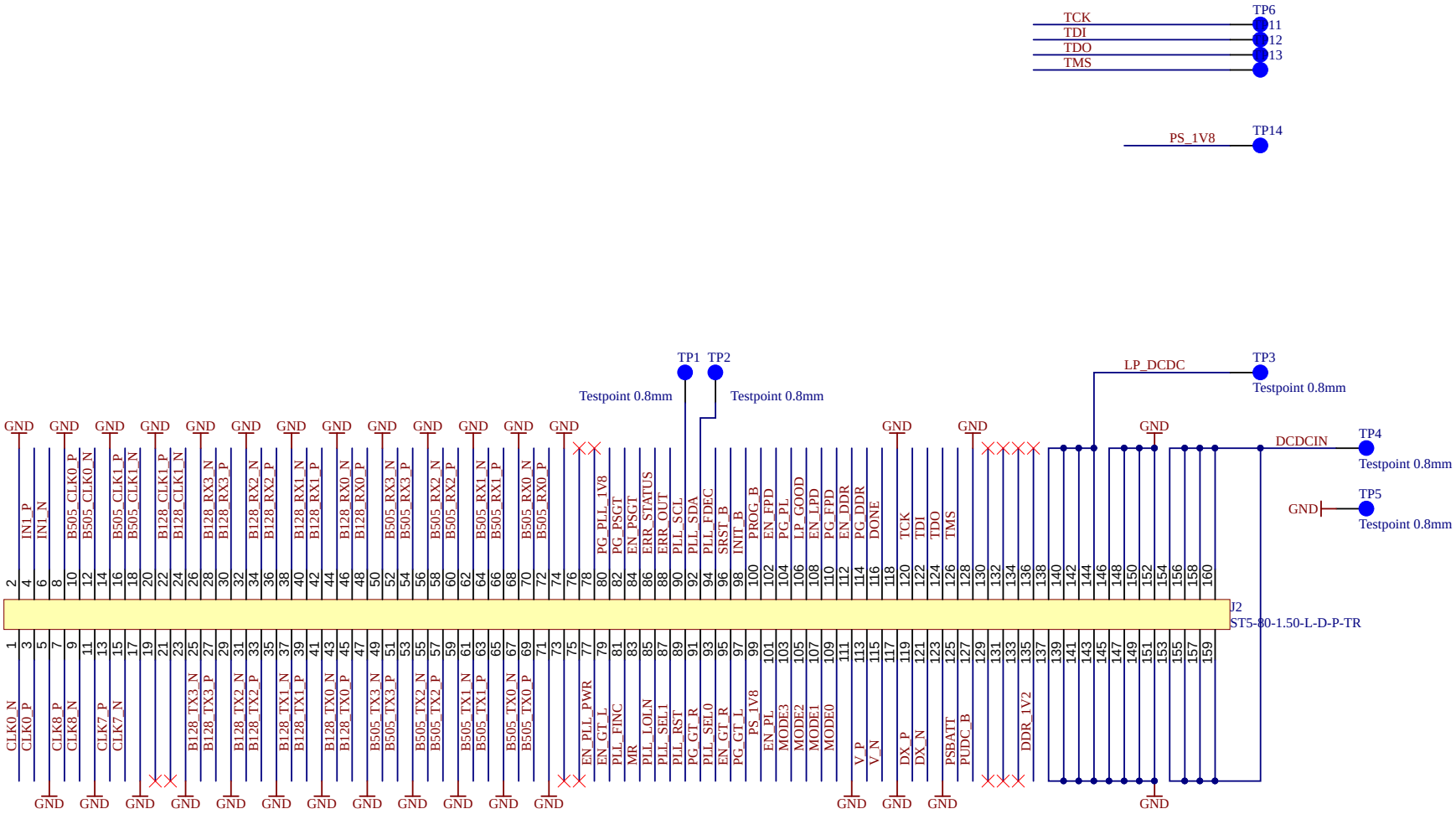

trenz electronic

Title: TE0808 - Connector J2			
A4	Number: TE0808 1EA		Rev. 04
Date: 2017-01-27	Copyright: Trenz Electronic GmbH / TT		Page3 of 28
Filename: J2.SchDoc			

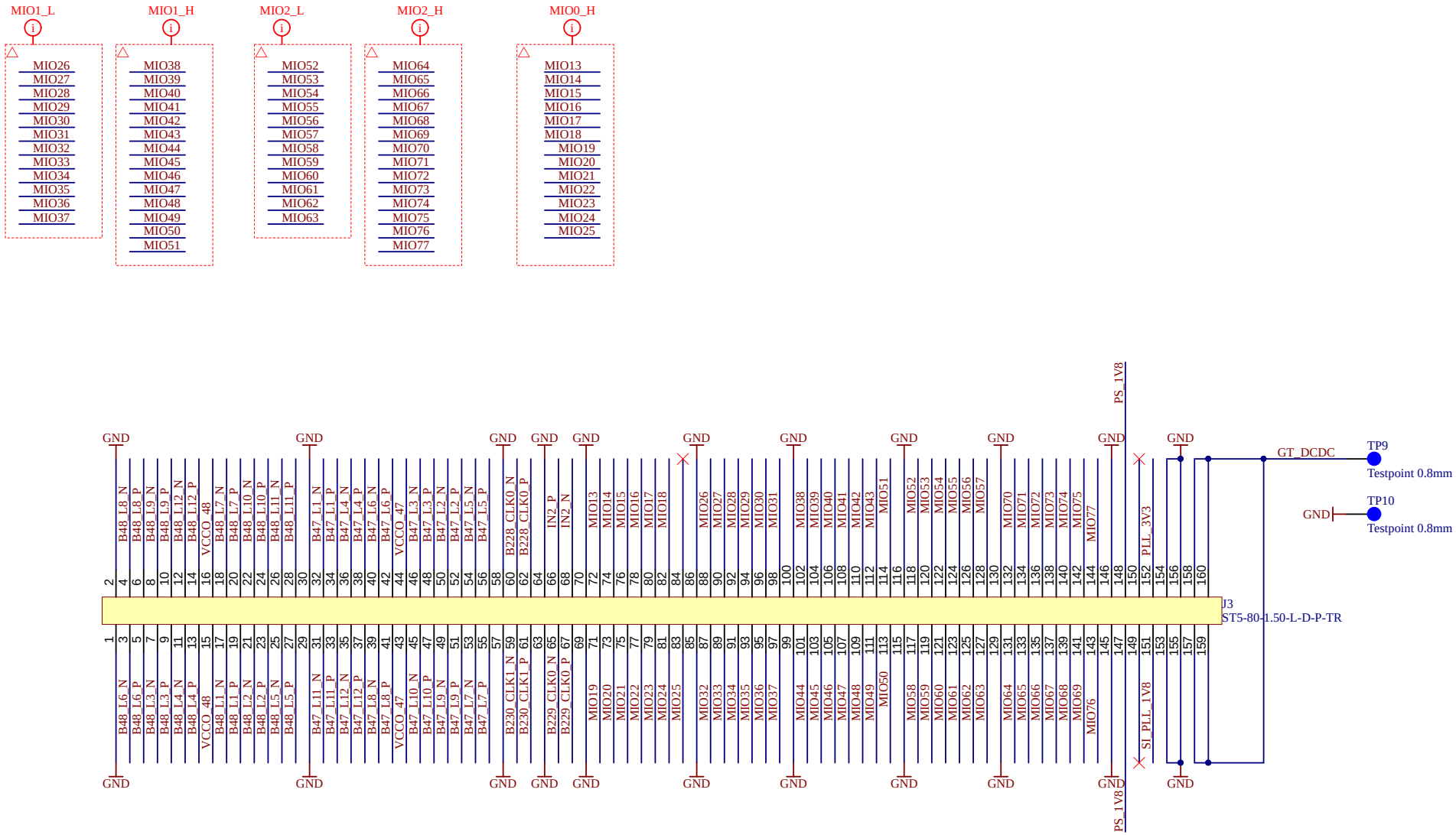

trenz electronic	Title: TE0808 - Connector J3		
A4	Number: TE0808 1EA		Rev. 04
Date: 2017-01-27	Copyright: Trenz Electronic GmbH / TT		Page4 of 28
Filename: J3.SchDoc			

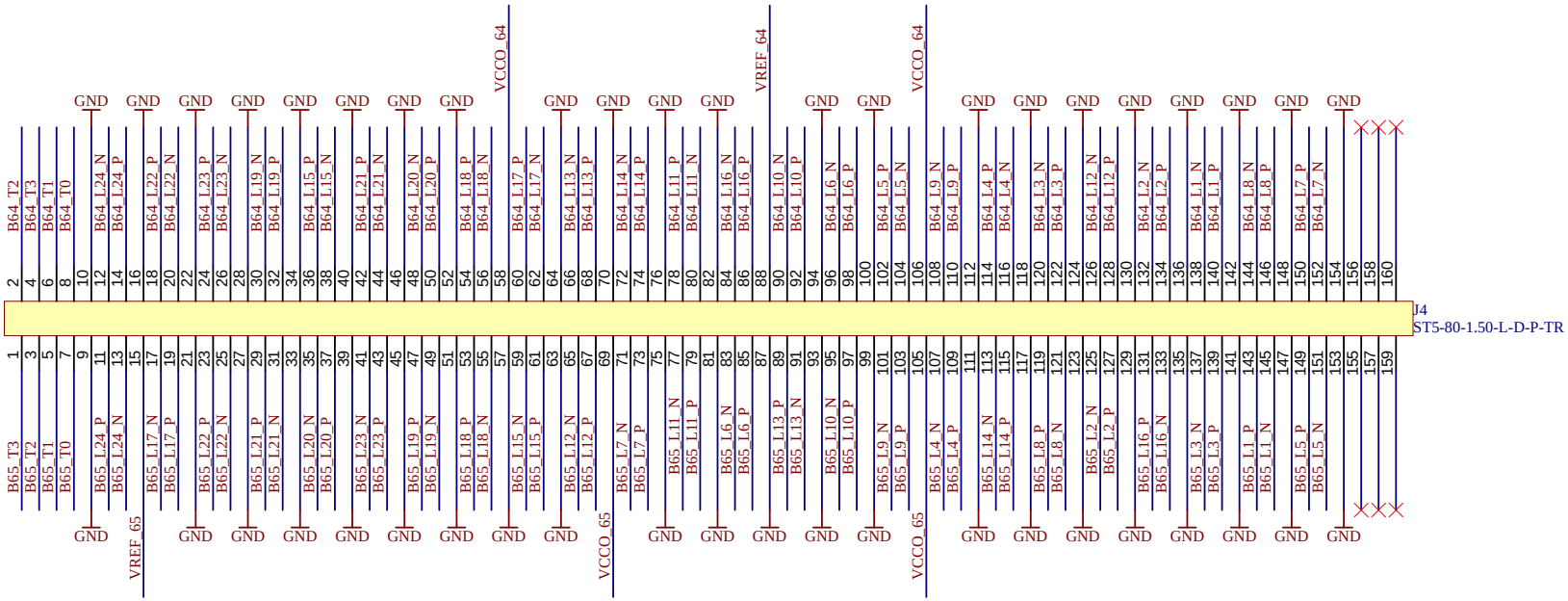

trenz electronic	Title: TE0808 - Connector J4		
A4	Number: TE0808 1EA		Rev. 04
Date: 2017-01-27	Copyright: Trenz Electronic GmbH / TT		Page5 of 28
Filename: J4.SchDoc			

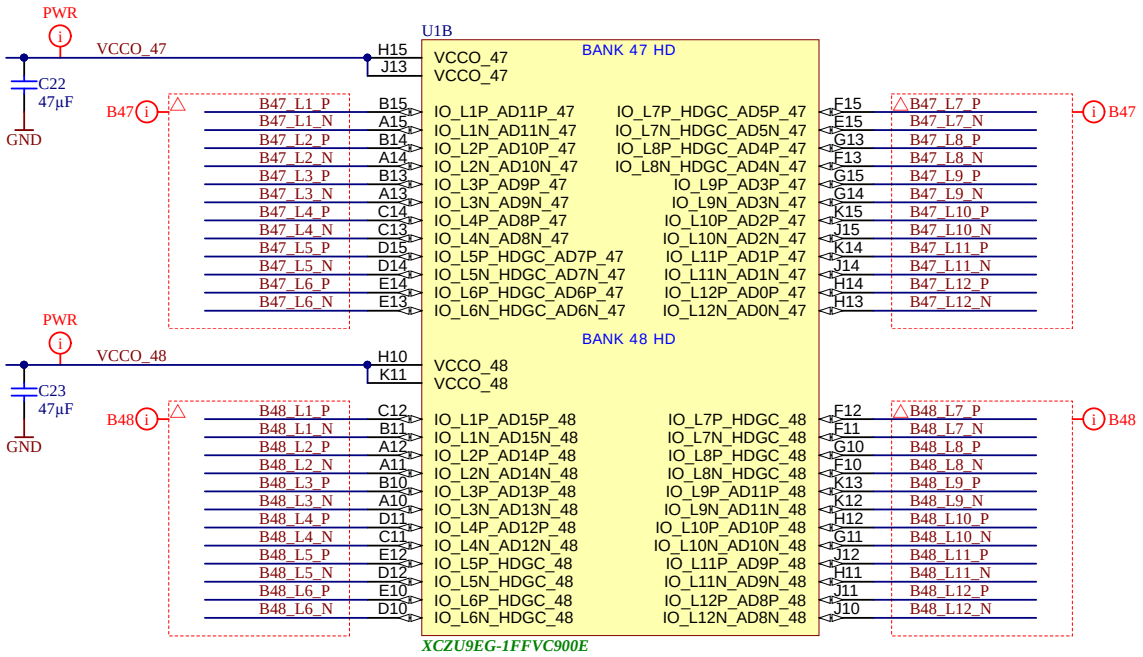

trenz electronic	Title: TE0808 - B47HD and B48HD		
A4	Number: TE0808 1EA		Rev. 04
Date: 2017-01-27	Copyright: Trenz Electronic GmbH / TT		Page6 of 28
Filename: B_HD.SchDoc			

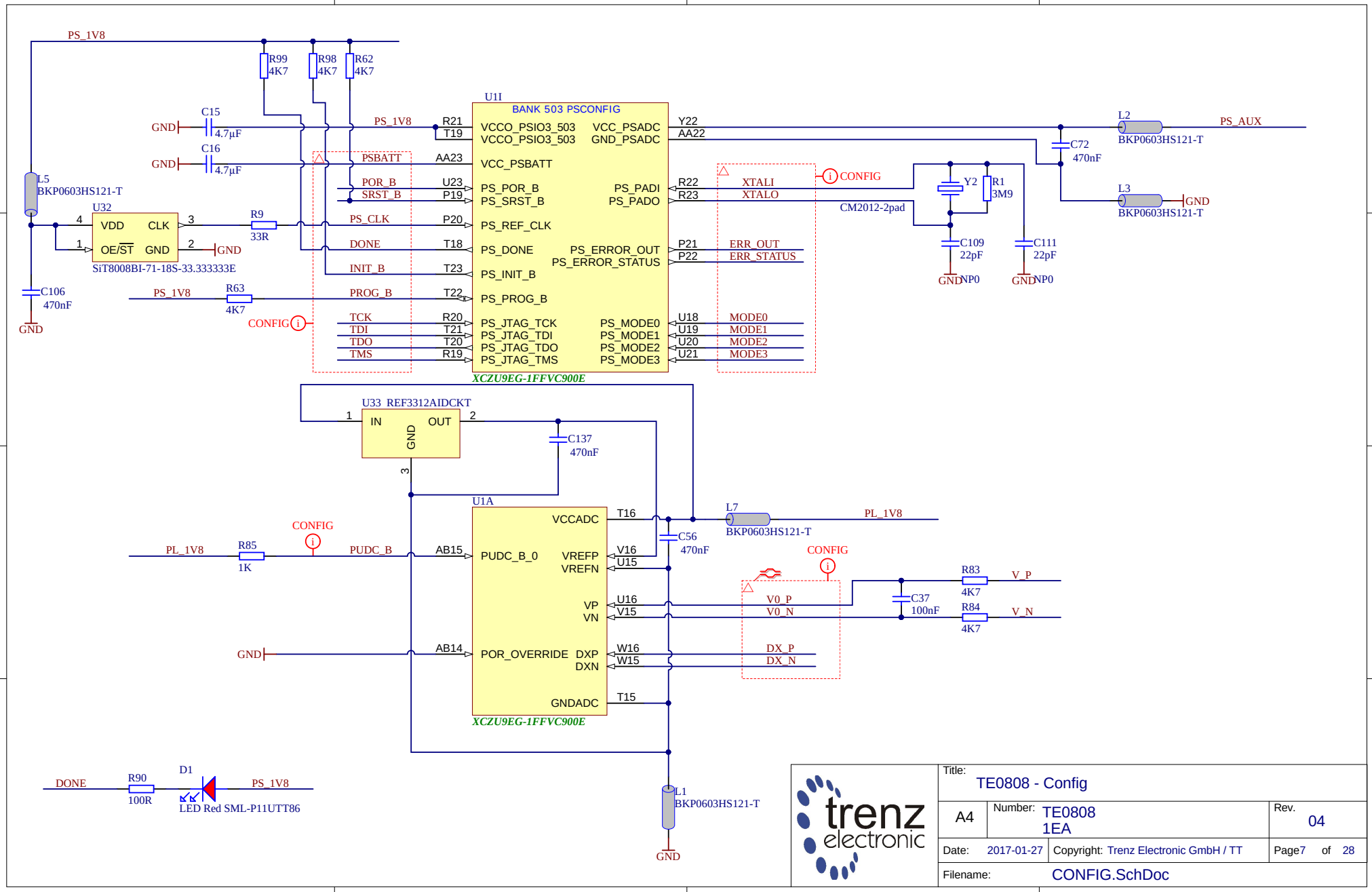
PS_1V8
R99 4K7
R98 4K7
R62 4K7
U1I
BANK 503 PSCONFIG
C15 4.7µF
C16 4.7µF
GND
PS_1V8
R21
T19
VCCO_PSIO3_503
VCCO_PSIO3_503
VCC_PSADC
GND_PSADC
Y22
AA22
L2
BKP0603HS121-T
PS_AUX
C72 470nF
PSBATT
AA23
VCC_PSBATT
L5
BKP0603HS121-T
U32
VDD
CLK
OE/ST
GND
SiT8008BI-71-18S-33.333333E
R9 33R
POR_B
SRST_B
U23
P19
PS_POR_B
PS_SRST_B
PS_PADI
PS_PADO
R22
R23
XTALI
XTALO
CONFIG
Y2
R1 3M9
CM2012-2pad
L3
BKP0603HS121-T
PS_CLK
P20
PS_REF_CLK
DONE
T18
PS_DONE
PS_ERROR_OUT
PS_ERROR_STATUS
P21
P22
ERR_OUT
ERR_STATUS
C109 22pF
C111 22pF
NP0
INIT_B
T23
PS_INIT_B
C106 470nF
PROG_B
T22
PS_PROG_B
R63 4K7
TCK
TDI
TDO
TMS
R20
T21
T20
R19
PS_JTAG_TCK
PS_JTAG_TDI
PS_JTAG_TDO
PS_JTAG_TMS
PS_MODE0
PS_MODE1
PS_MODE2
PS_MODE3
U18
U19
U20
U21
MODE0
MODE1
MODE2
MODE3
XCZU9EG-1FFVC900E
U33 REF3312AIDCKT
IN
OUT
GND
C137 470nF
U1A
VCCADC
T16
L7
BKP0603HS121-T
PL_1V8
C56 470nF
R85 1K
PUDC_B
AB15
PUDC_B_0
VREFP
VREFN
V16
U15
V0_P
V0_N
U16
V15
VP
VN
R83 4K7
R84 4K7
C37 100nF
V_P
V_N
AB14
POR_OVERRIDE
DXP
DXN
W16
W15
DX_P
DX_N
T15
GNDADC
XCZU9EG-1FFVC900E
DONE
R90 100R
D1
LED Red SML-P11UTT86
L1
BKP0603HS121-T
trenz electronic
Title:
TE0808 - Config
A4
Number:
TE0808
1EA
Rev.
04
Date:
2017-01-27
Copyright: Trenz Electronic GmbH / TT
Page7 of 28
Filename:
CONFIG.SchDoc

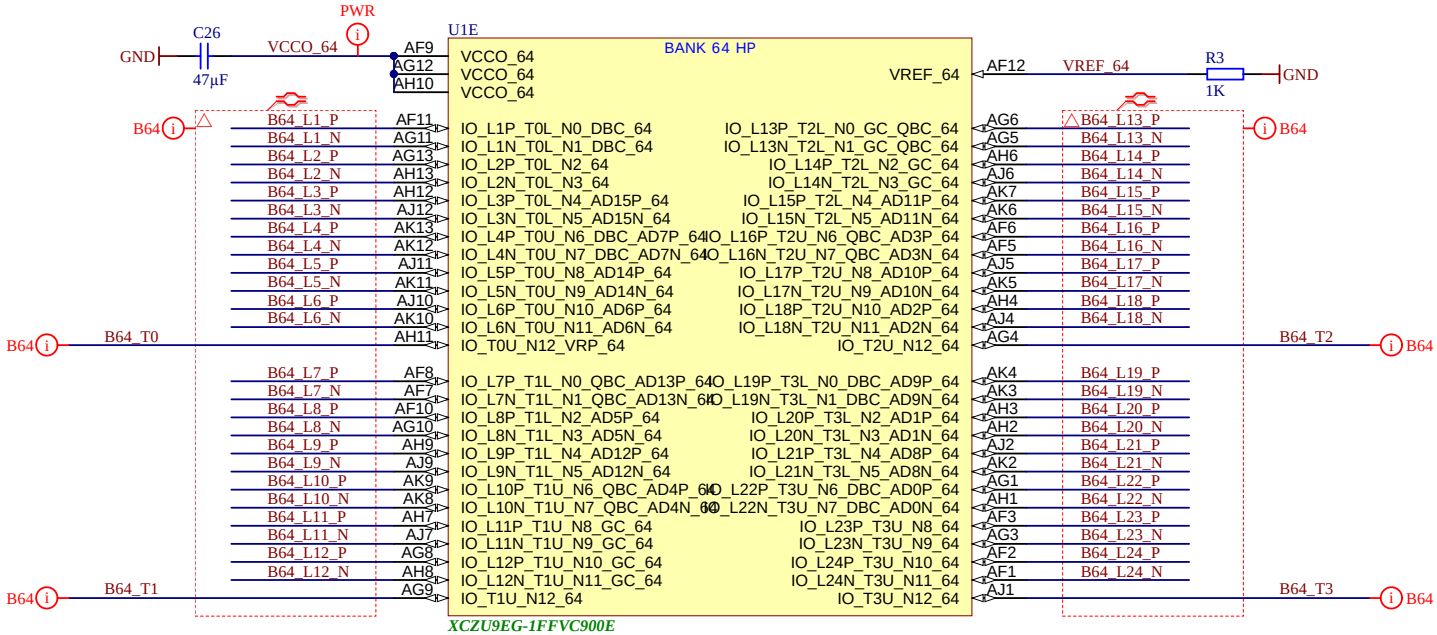

trenz electronic	Title: TE0808 - B64		
A4	Number: TE0808 1EA		Rev. 04
Date: 2017-01-27	Copyright: Trenz Electronic GmbH / TT		Page8 of 28
Filename: B64.SchDoc			

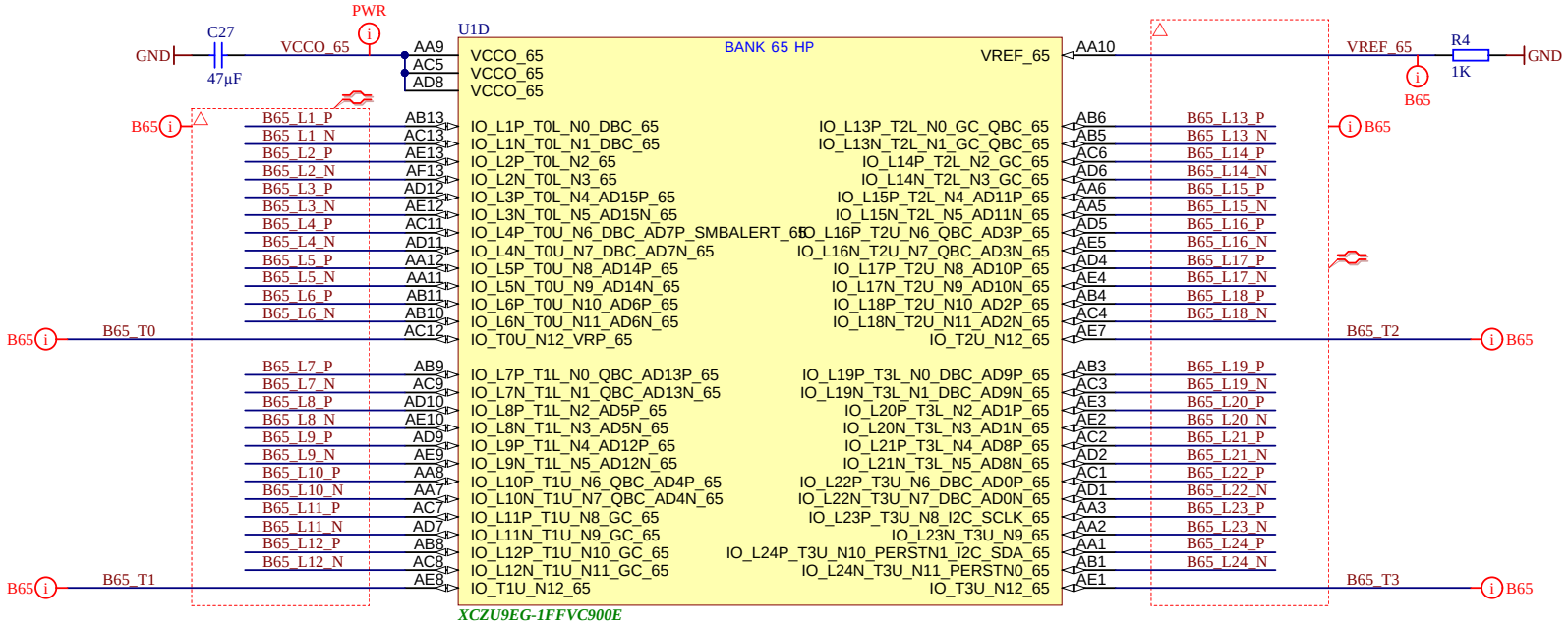

trenz electronic	Title: TE0808 - B65		
A4	Number: TE0808 1EA		Rev. 04
Date: 2017-01-27	Copyright: Trenz Electronic GmbH / TT		Page9 of 28
Filename: B65.SchDoc			

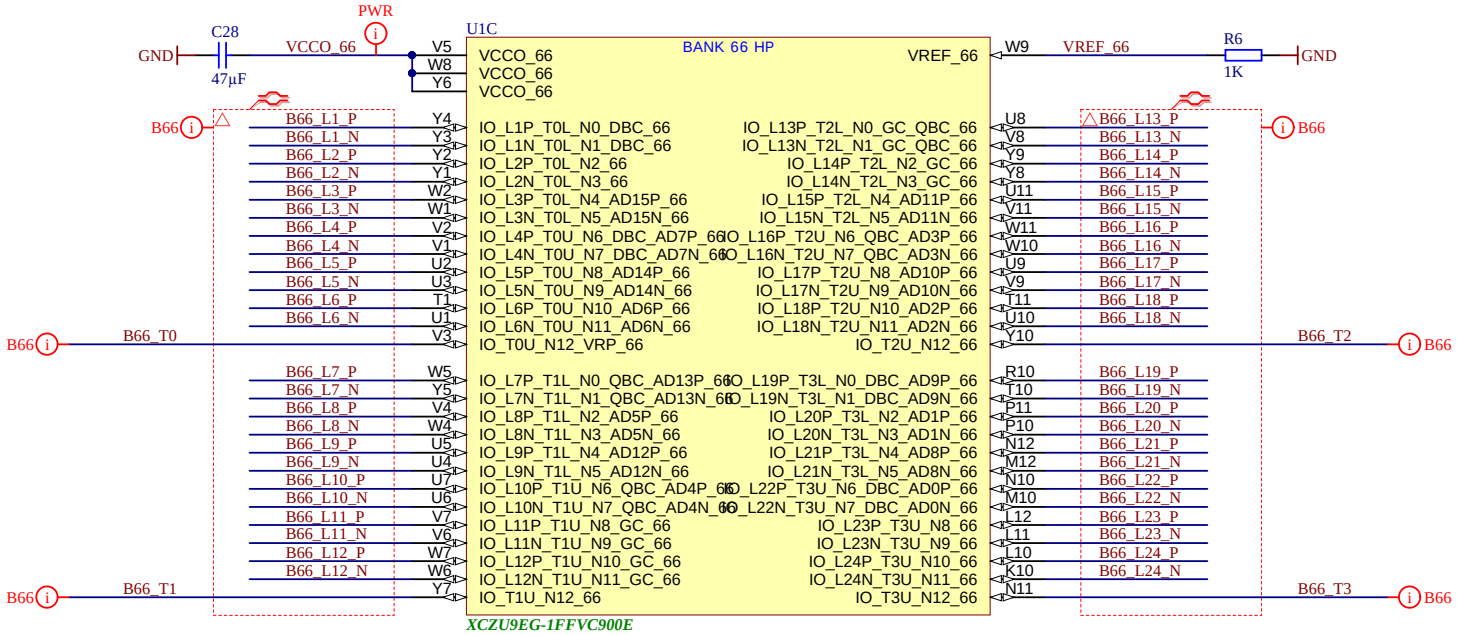

trenz electronic	Title: TE0808 - B66		
A4	Number: TE0808 1EA		Rev. 04
Date: 2017-01-27	Copyright: Trenz Electronic GmbH / TT		Page10 of 28
Filename: B66.SchDoc			

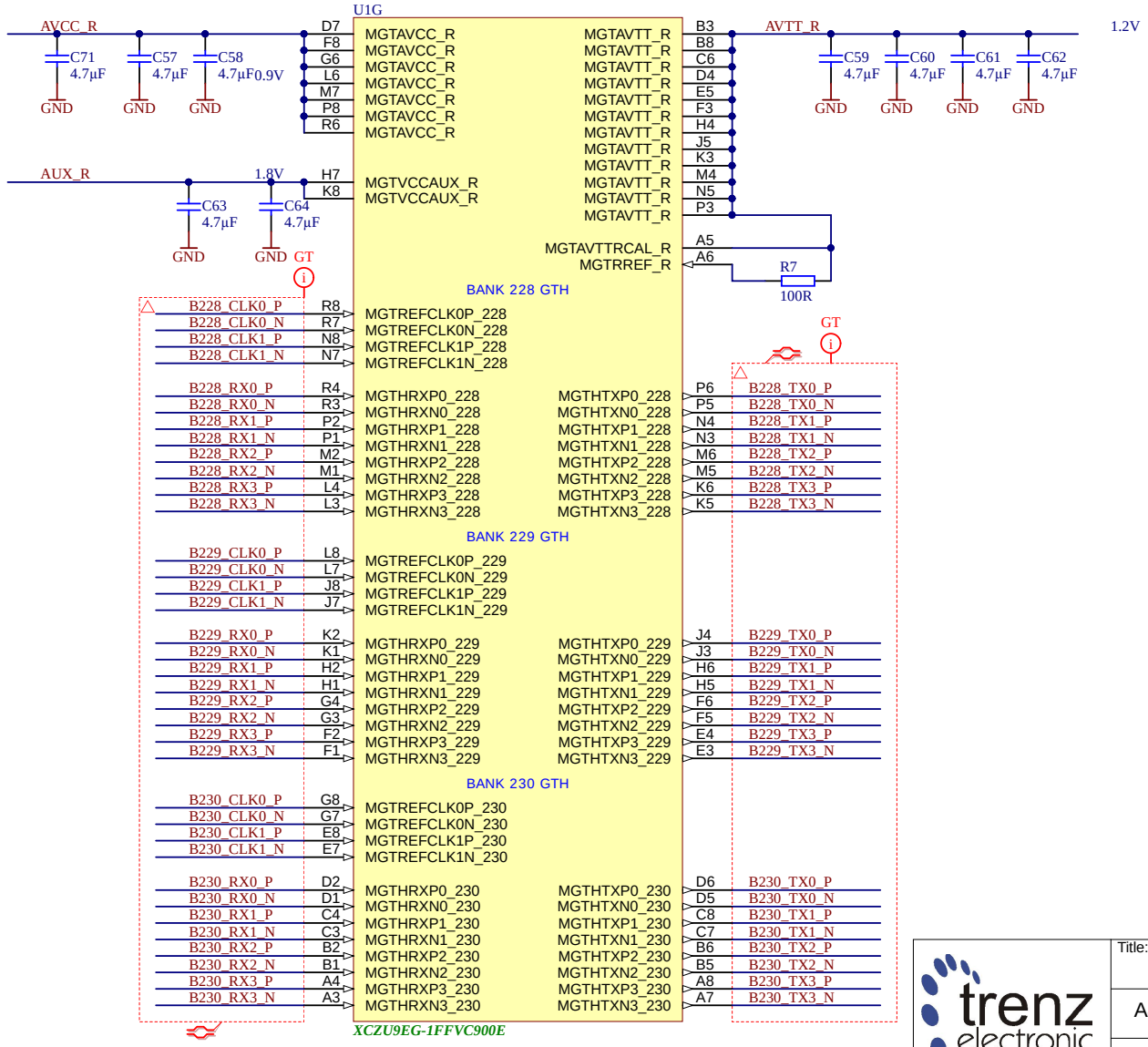

trenz electronic	Title: TE0808 - B228GTH_B229GTH_B230GTH		
A4	Number: TE0808 1EA		Rev. 04
Date: 2017-01-27	Copyright: Trenz Electronic GmbH / TT		Page11 of 28
Filename: B_GT.SchDoc			

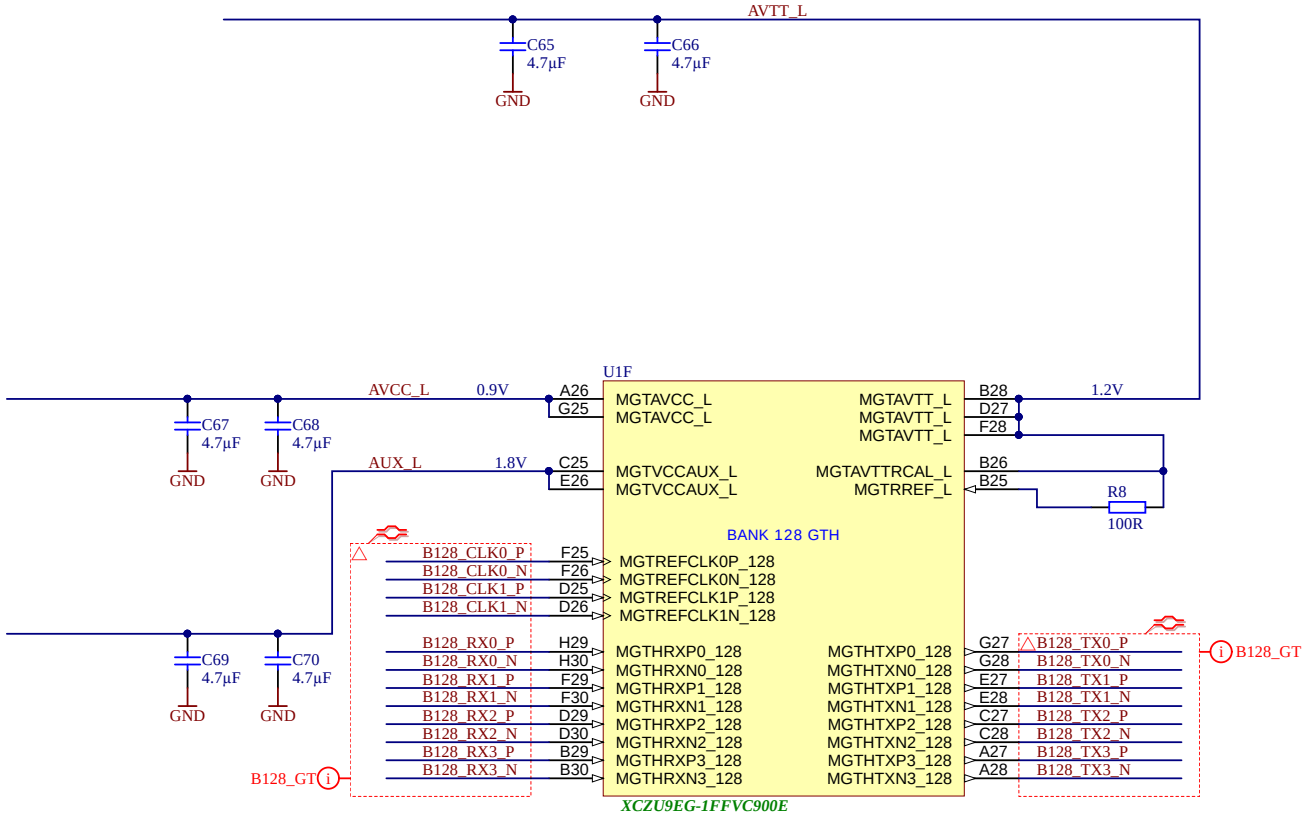

trenz electronic	Title: TE0808 - B128GTH		
A4	Number: TE0808 1EA		Rev. 04
Date: 2017-01-27	Copyright: Trenz Electronic GmbH / TT		Page12 of 28
Filename: B_GT_2.SchDoc			

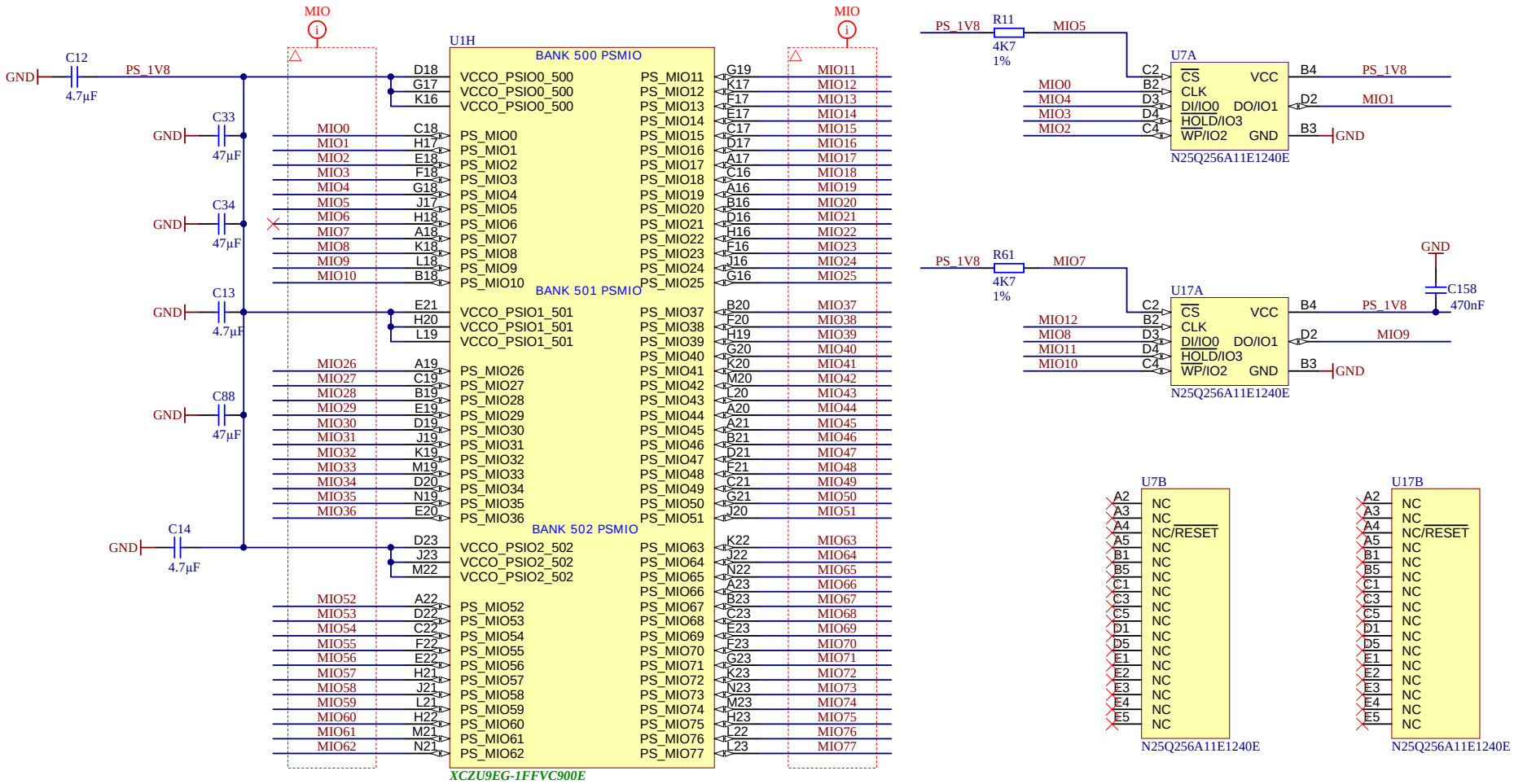

trenz electronic	Title: TE0808 - MIO Banks		
A4	Number: TE0808 1EA		Rev. 04
Date: 2017-01-27	Copyright: Trenz Electronic GmbH / TT		Page13 of 28
Filename: B_MIO.SchDoc			

trenz electronic	Title: TE0808 - PS_DDR		
A4	Number: TE0808 1EA		Rev. 04
Date: 2017-01-27	Copyright: Trenz Electronic GmbH / TT		Page14 of 28
Filename: PS_DDR.SchDoc			

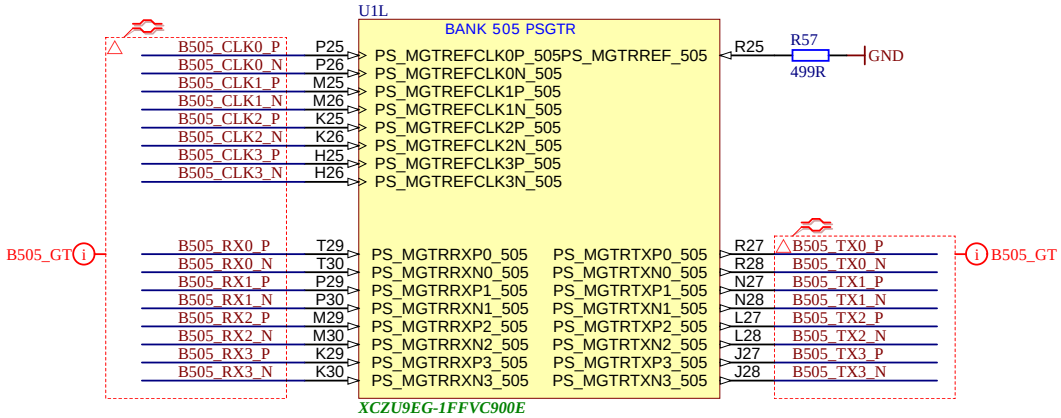

trenz electronic	Title: TE0808 - PS_GT		
A4	Number: TE0808 1EA		Rev. 04
Date: 2017-01-27	Copyright: Trenz Electronic GmbH / TT		Page15 of 28
Filename: B_PS_GT.SchDoc			

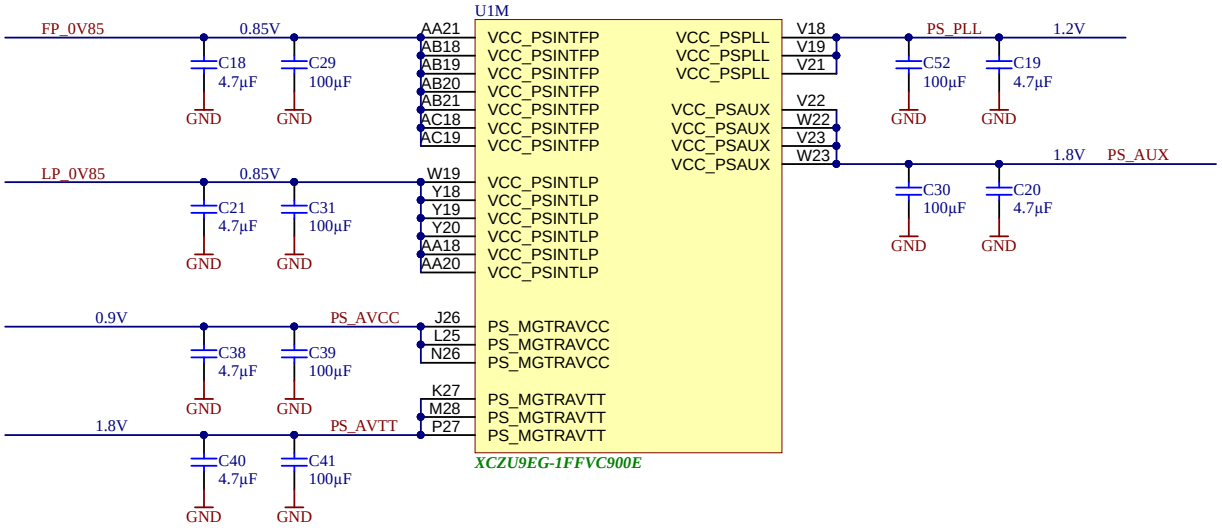

trenz electronic	Title: TE0808 - ZU_PS_POWER		
A4	Number: TE0808 1EA		Rev. 04
Date: 2017-01-27	Copyright: Trenz Electronic GmbH / TT		Page16 of 28
Filename: ZU_PS_POWER.SchDoc			

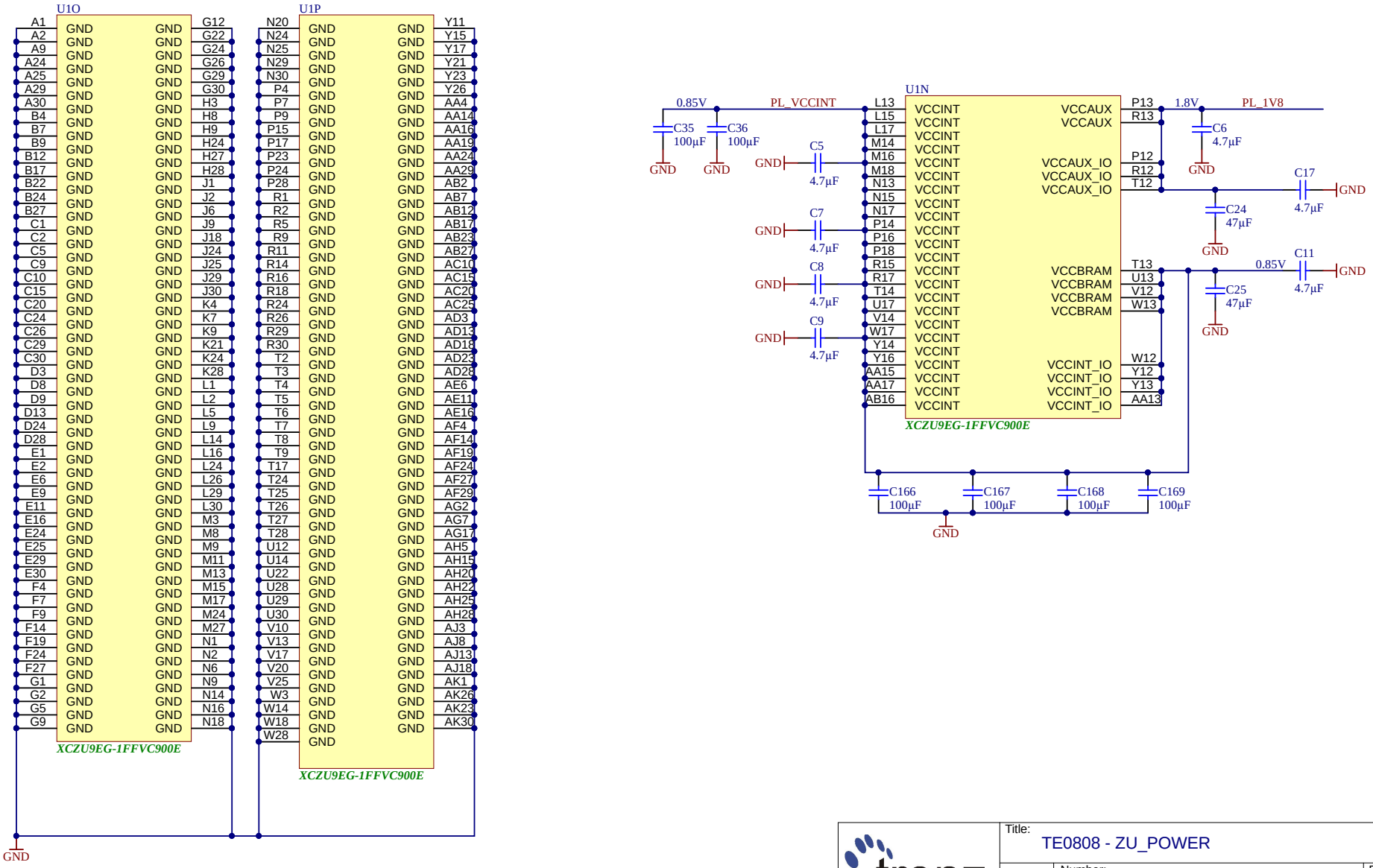

trenz electronic	Title: TE0808 - ZU_POWER		
A4	Number: TE0808 1EA		Rev. 04
Date: 2017-01-27	Copyright: Trenz Electronic GmbH / TT		Page17 of 28
Filename: ZU_POWER.SchDoc			

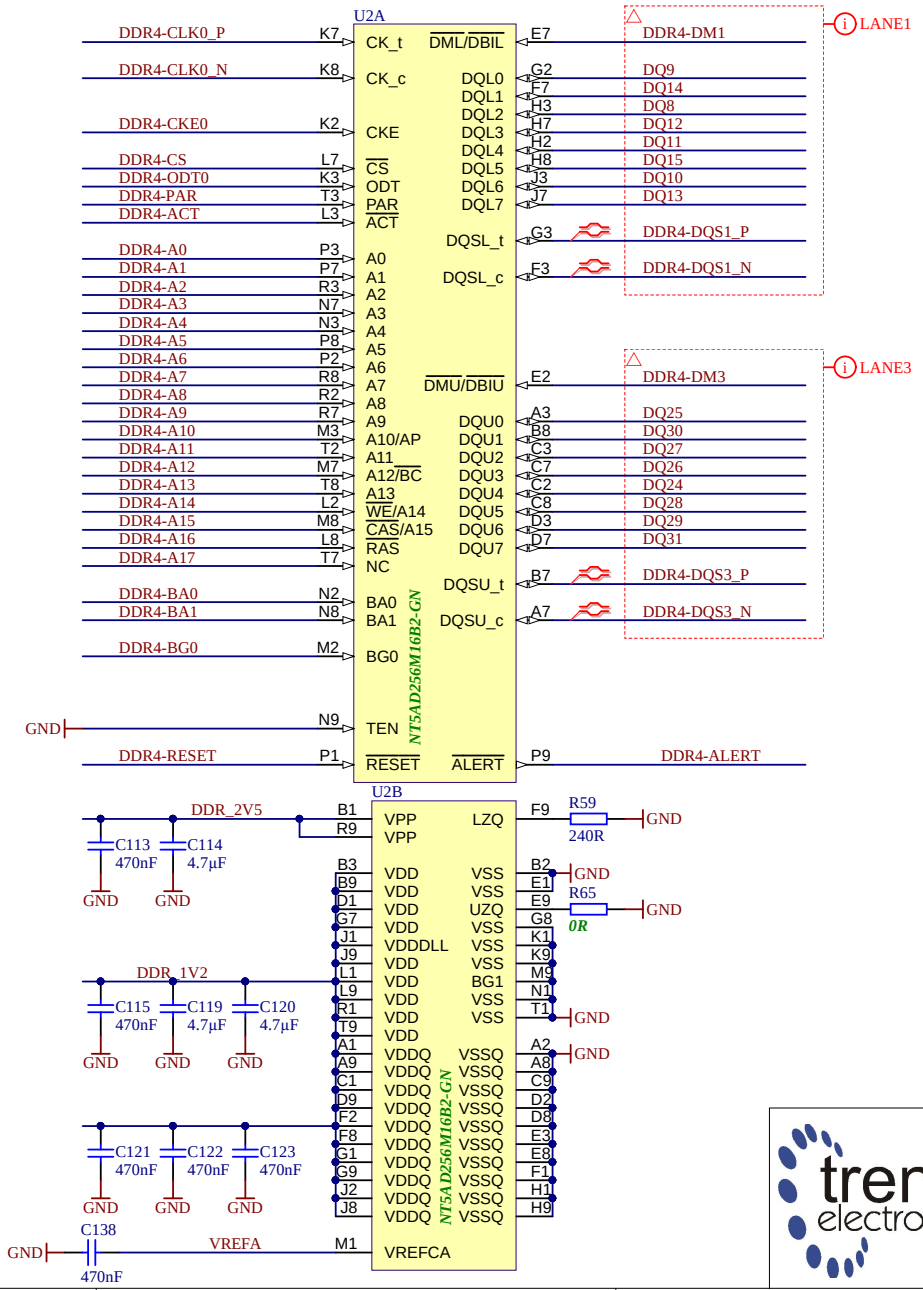

trenz electronic	Title: TE0808 - DDR4_1_RAM		
A4	Number: TE0808 1EA		Rev. 04
Date: 2017-01-27	Copyright: Trenz Electronic GmbH / TT		Page18 of 28
Filename: DDR4-RAM.SchDoc			

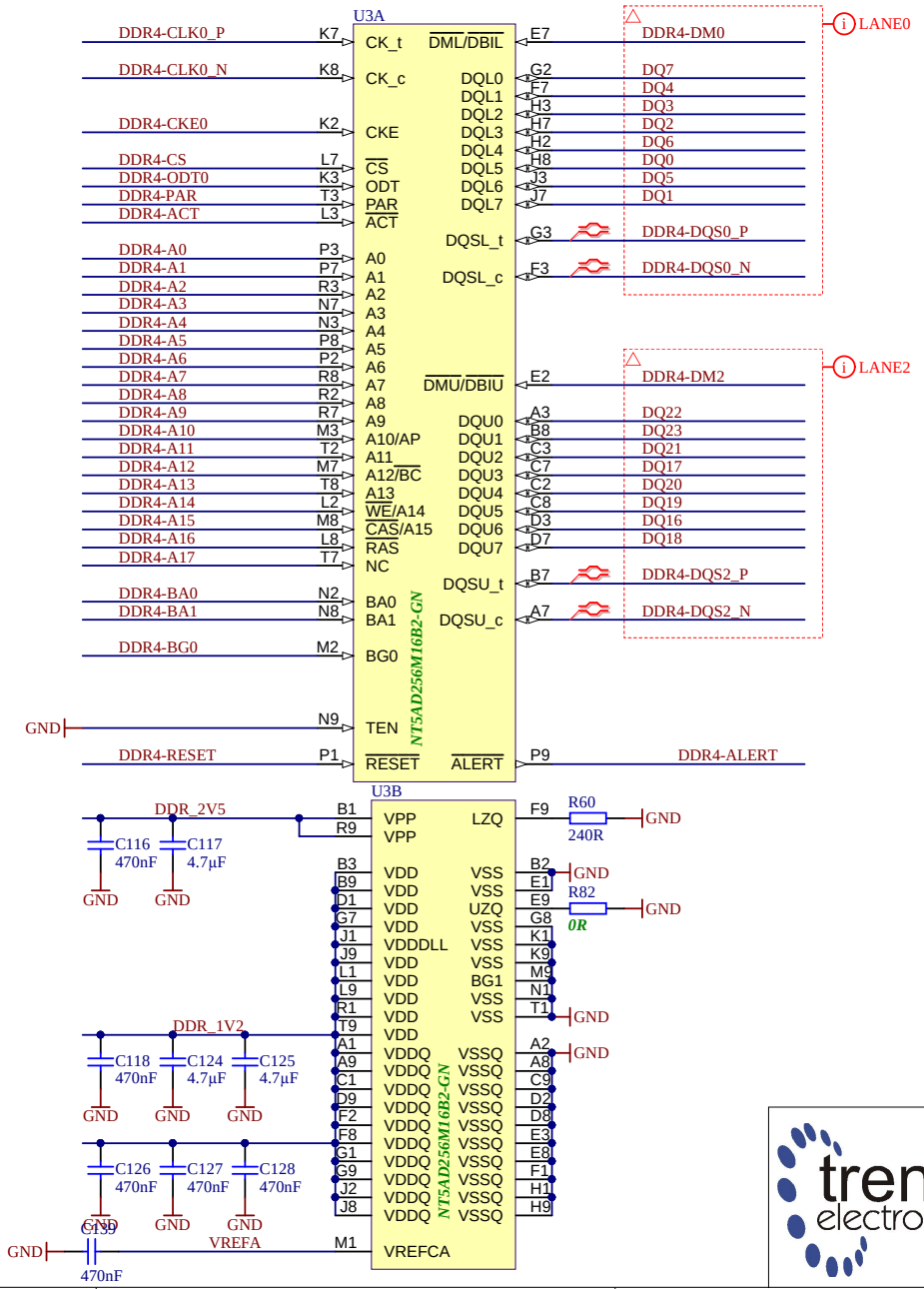

trenz electronic

Title: TE0808 - DDR4_2_RAM			
A4	Number: TE0808 1EA		Rev. 04
Date: 2017-01-27	Copyright: Trenz Electronic GmbH / TT		Page19 of 28
Filename: DDR4-RAM_2.SchDoc			

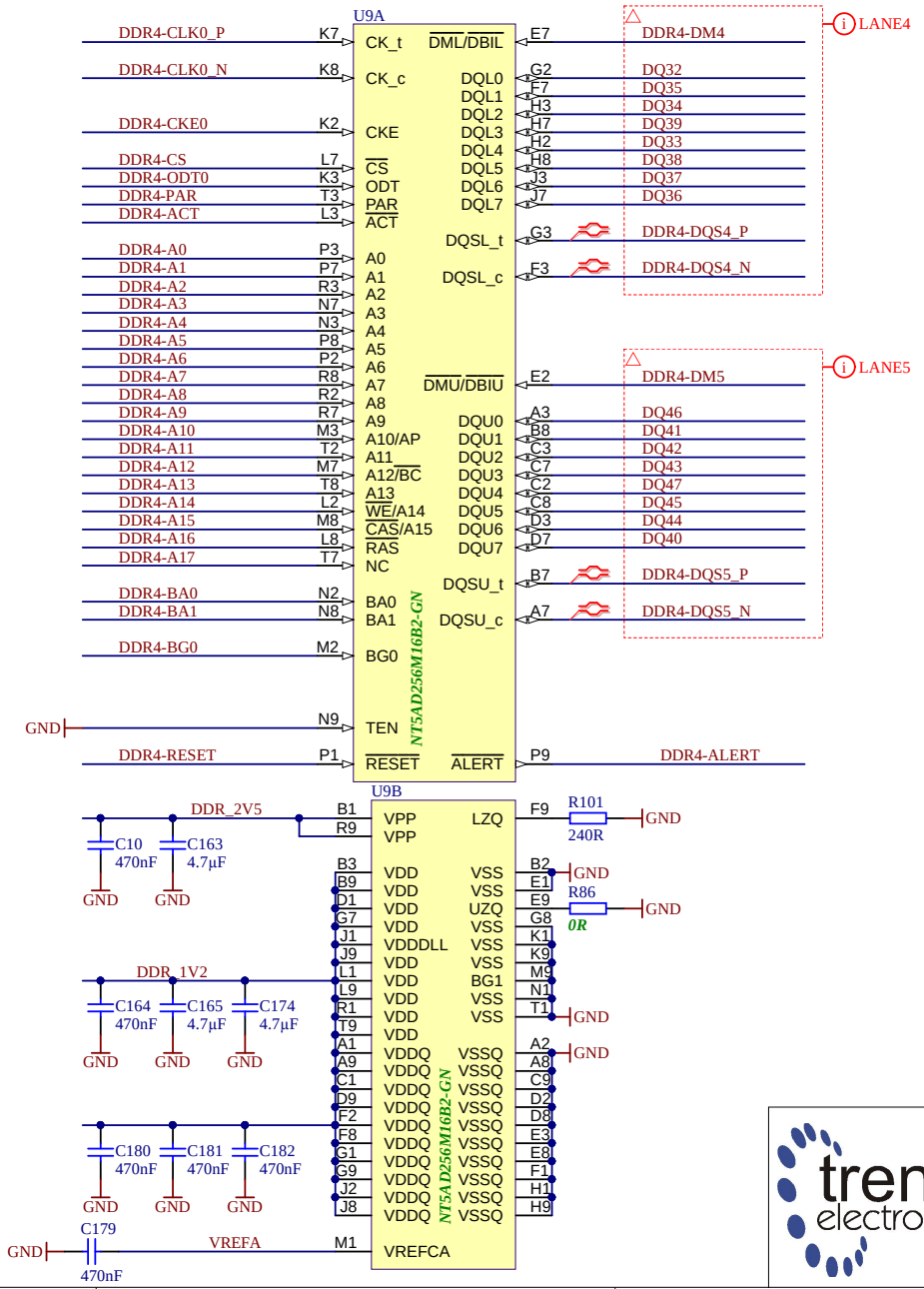

trenz electronic	Title: TE0808 - DDR4_3_RAM		
A4	Number: TE0808 1EA		Rev. 04
Date: 2017-01-27	Copyright: Trenz Electronic GmbH / TT		Page20 of 28
Filename: DDR4-RAM_3.SchDoc			

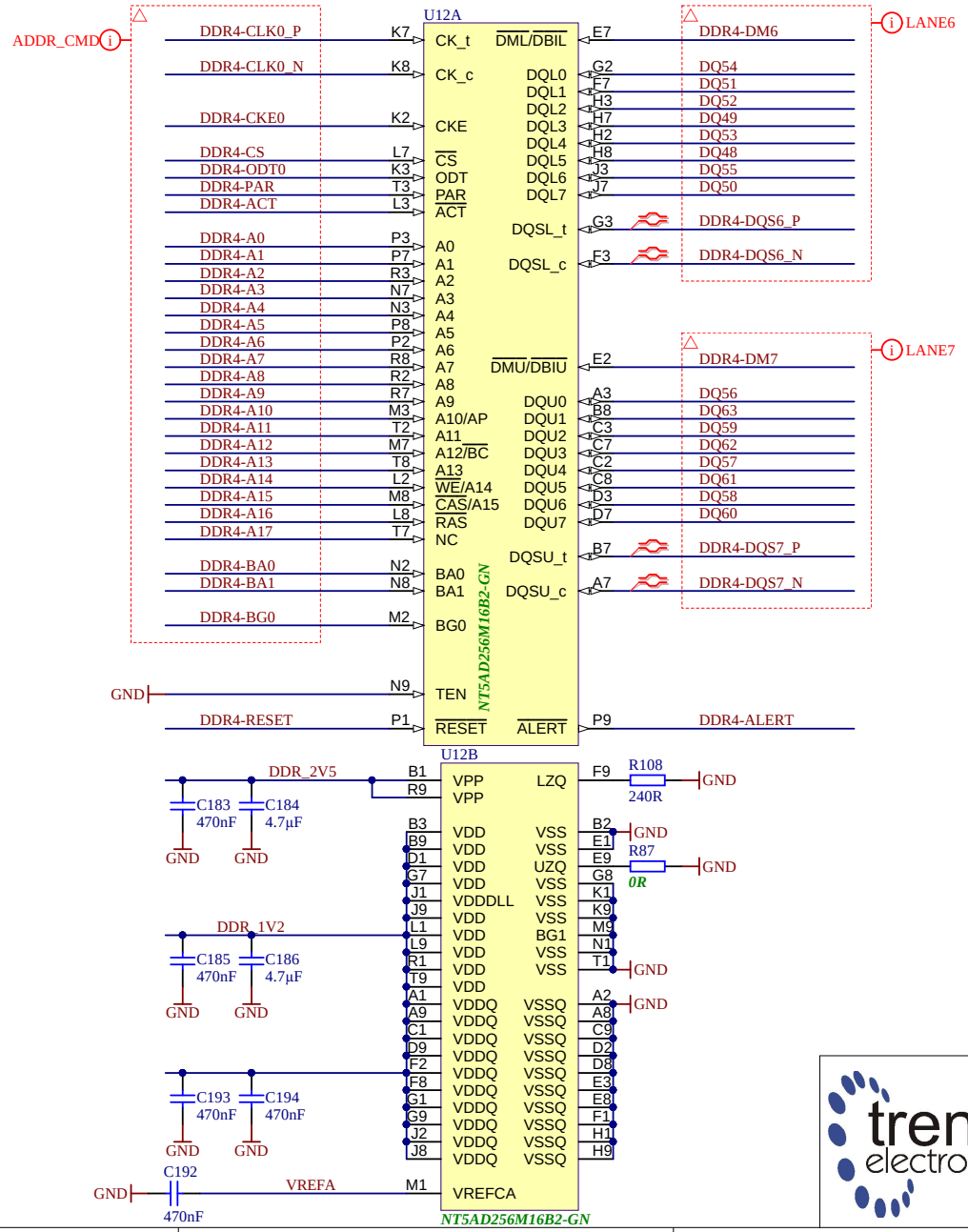

trenz electronic	Title: TE0808 - DDR4_4_RAM		
A4	Number: TE0808 1EA		Rev. 04
Date: 2017-01-27	Copyright: Trenz Electronic GmbH / TT		Page21 of 28
Filename: DDR4-RAM_4.SchDoc			

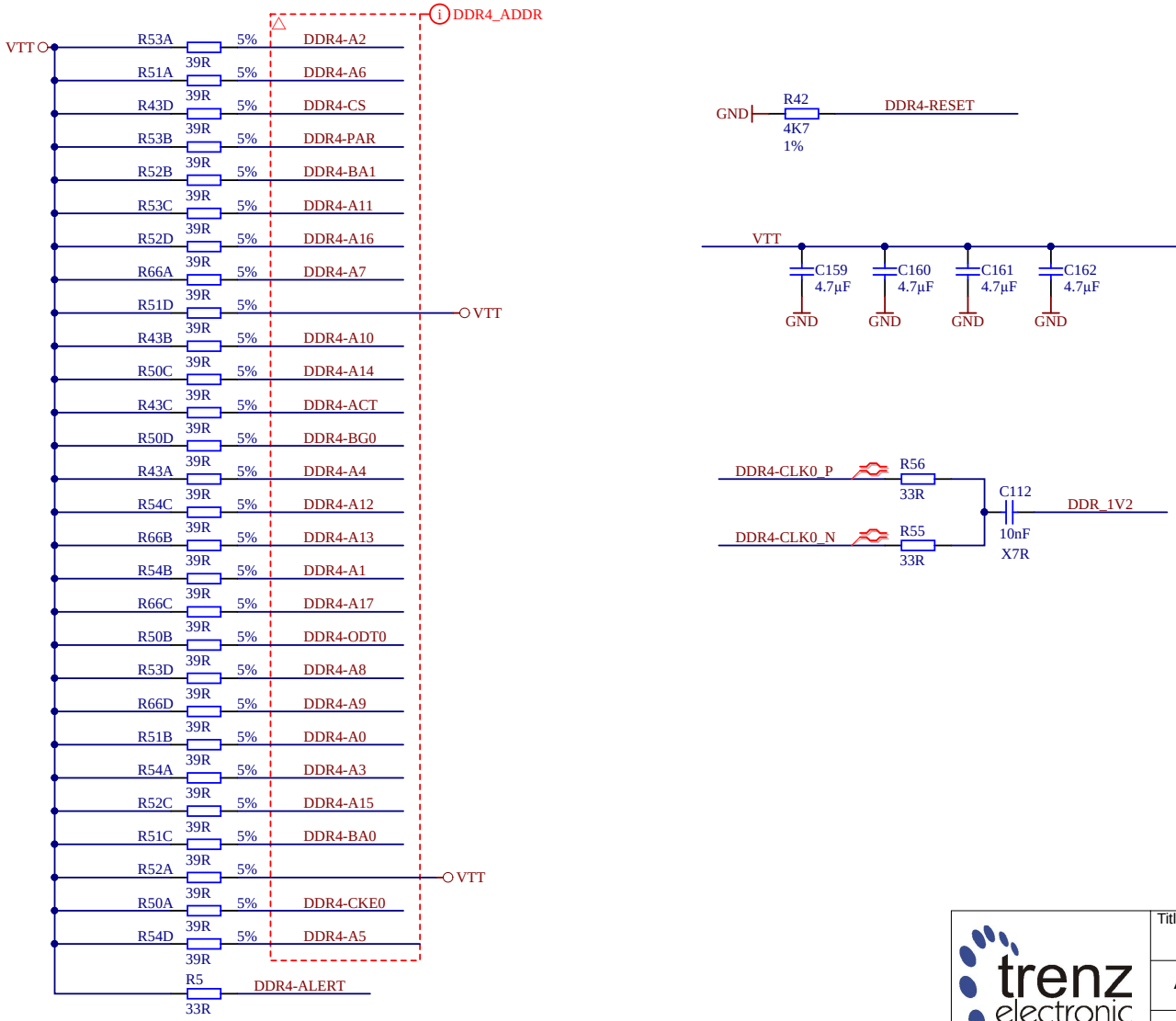

trenz electronic	Title: TE0808 - DDR4_TERM		
A4	Number: TE0808 1EA		Rev. 04
Date: 2017-01-27	Copyright: Trenz Electronic GmbH / TT		Page22 of 28
Filename: DDR4-TERM.SchDoc			

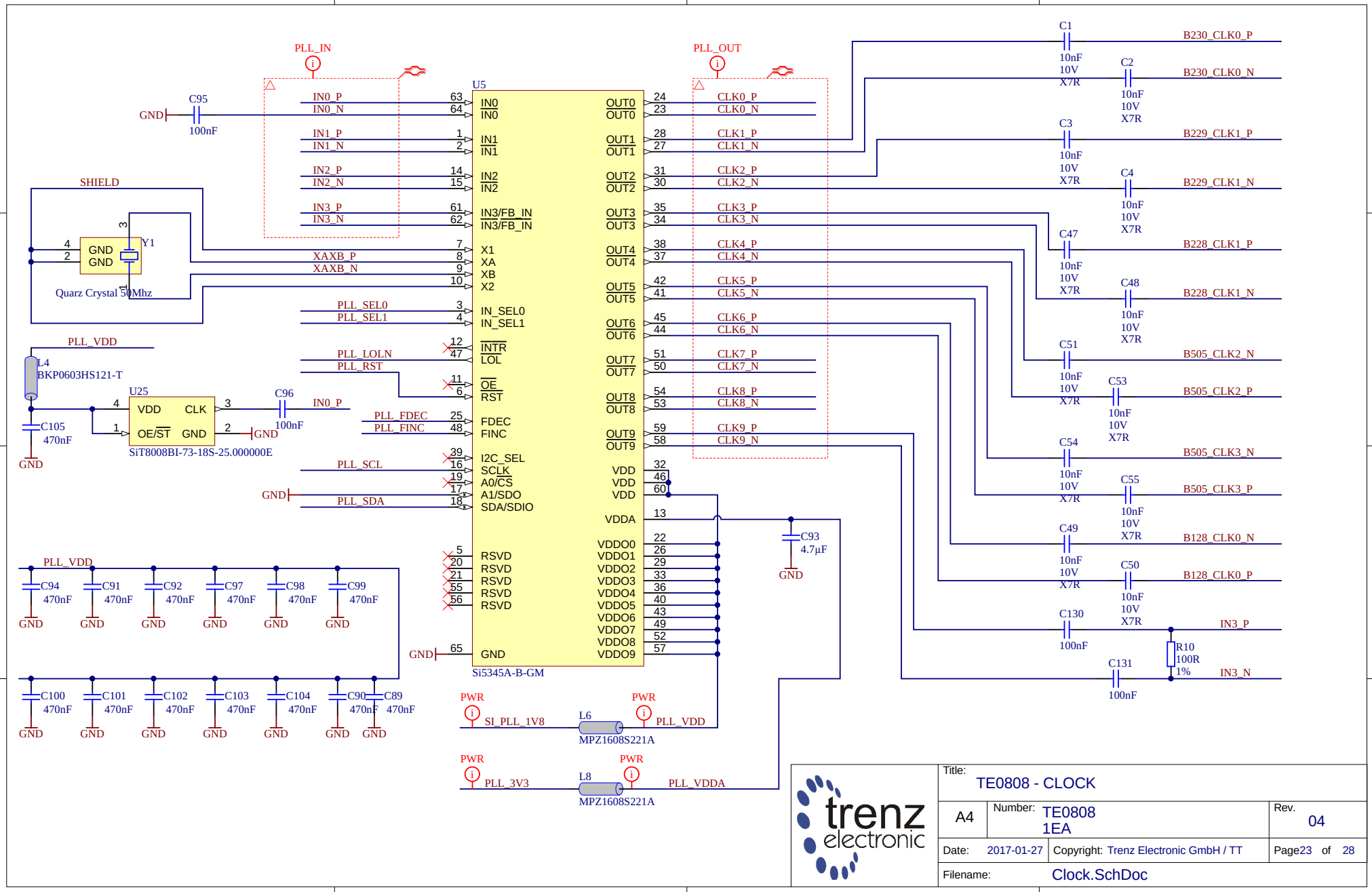

trenz electronic	Title: TE0808 - CLOCK		
A4	Number: TE0808 1EA		Rev. 04
Date: 2017-01-27	Copyright: Trenz Electronic GmbH / TT		Page23 of 28
Filename: Clock.SchDoc			

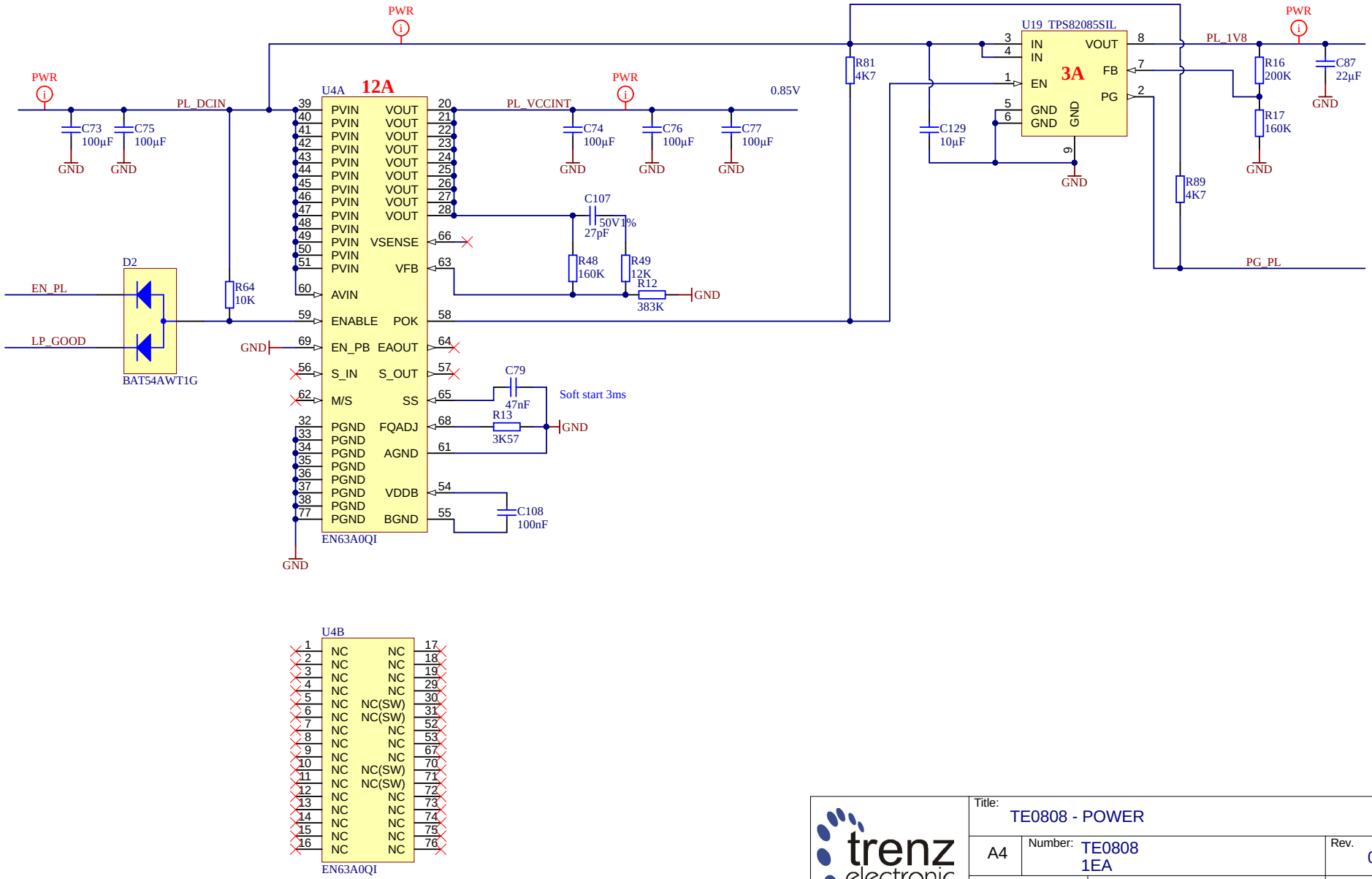

trenz electronic	Title: TE0808 - POWER		
A4	Number: TE0808 1EA		Rev. 04
Date: 2017-01-27	Copyright: Trenz Electronic GmbH / TT		Page24 of 28
Filename: POWER.SchDoc			

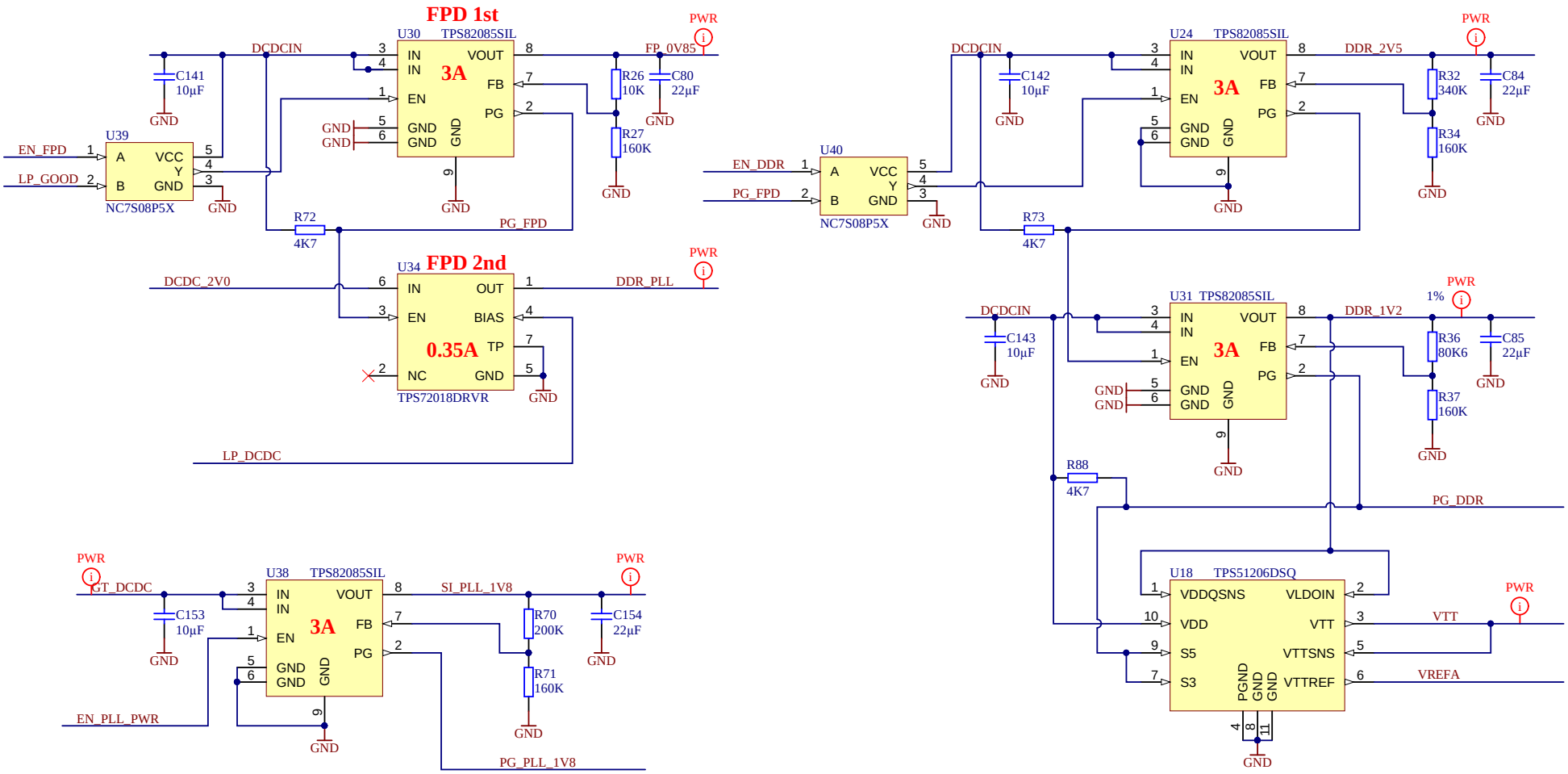

trenz electronic	Title: TE0808 - POWER_2		
A4	Number: TE0808 1EA		Rev. 04
Date: 2017-01-27	Copyright: Trenz Electronic GmbH / TT		Page25 of 28
Filename: POWER_2.SchDoc			

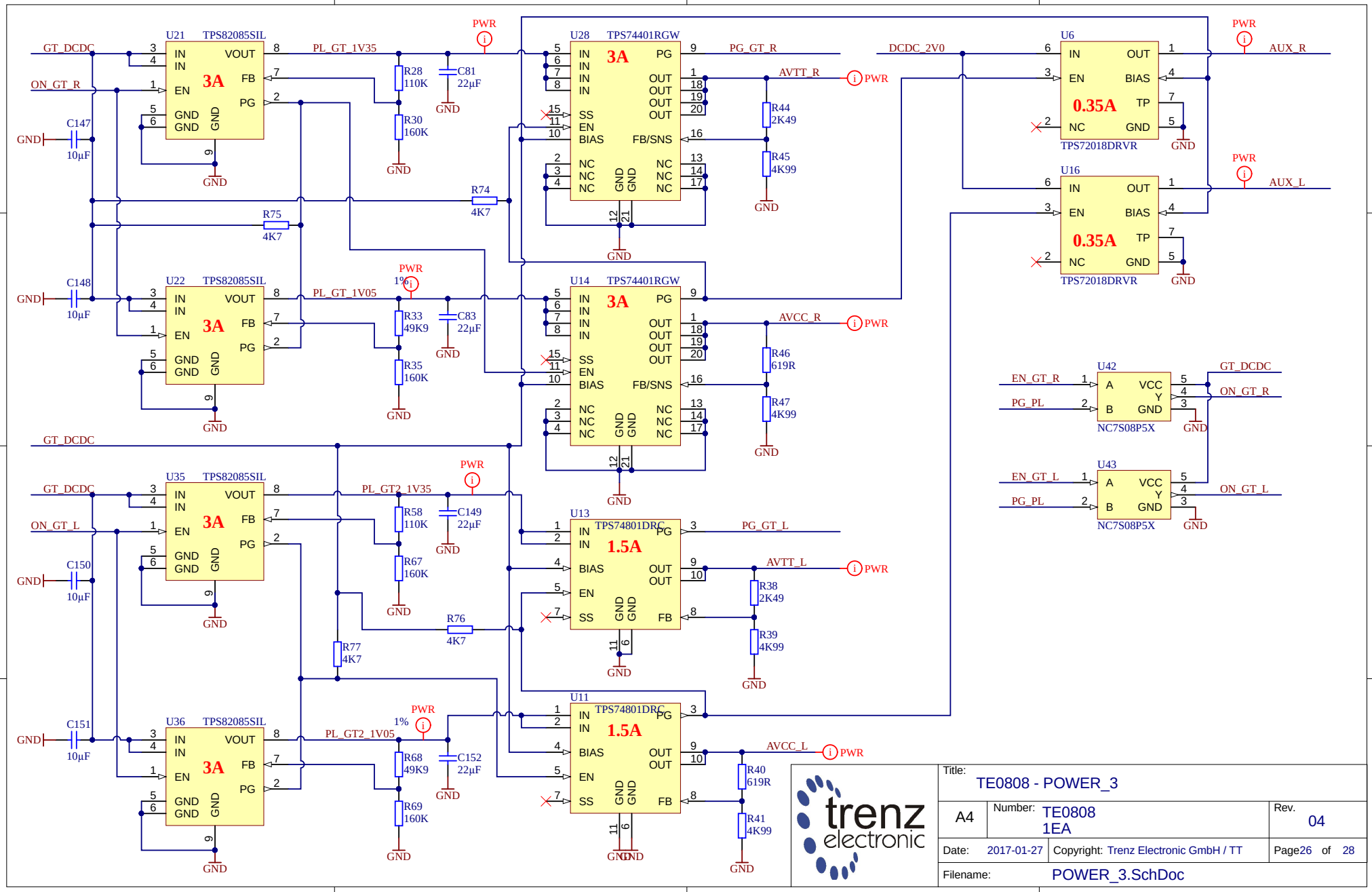

Title: TE0808 - POWER_3			
A4	Number: TE0808 1EA		Rev. 04
Date: 2017-01-27	Copyright: Trenz Electronic GmbH / TT		Page26 of 28
Filename: POWER_3.SchDoc			

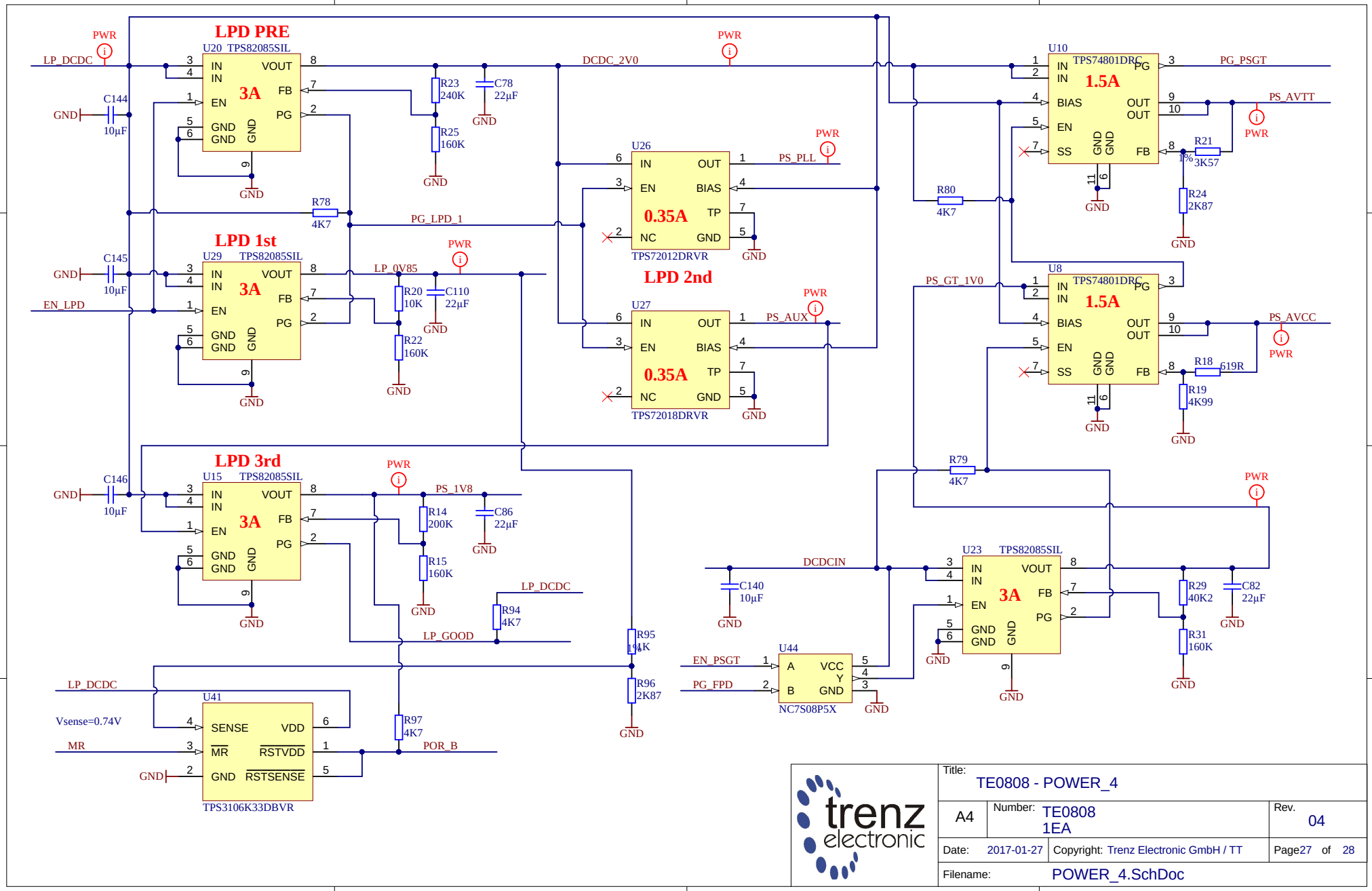

trenz electronic	Title: TE0808 - POWER_4		
A4	Number: TE0808 1EA		Rev. 04
Date: 2017-01-27	Copyright: Trenz Electronic GmbH / TT		Page27 of 28
Filename: POWER_4.SchDoc			

CHANGES REV03 to REV04
---
1) added resistors R65,R82,R86,R87 (240R) for each DDR4-chip for supporting DDP DDR4 chips
2) full update lib

Title: TE0808 - Changes list			
A4	Number: TE0808 1EA		Rev. 04
Date: 2017-01-27	Copyright: Trenz Electronic GmbH		Page28 of 28
Filename: Revision_Changes.SchDoc			