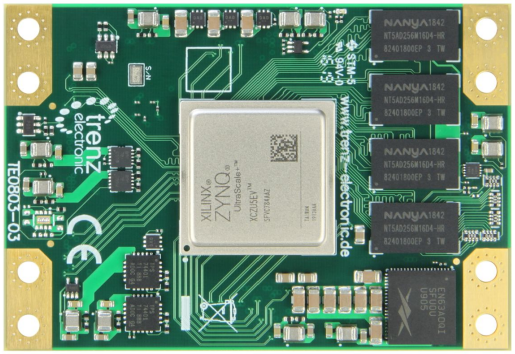

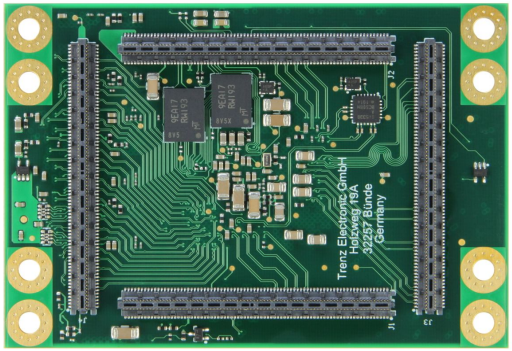

Regarding the usage of our schematics and alike documentation for Trenz module TE0813.

Project is protected under copyright and we strongly and strictly prohibit the reverse engineering or recreation, even if the design is just adapted or modified. TE0813is protected under such right and in case of plagiarism we will have to do anything necessary in order to protect our assets.

Schematics and other handouts serve for informational purposes only!

trenz electronic	Title: TE0813		
	A4	Number: TE0813 4GE11-A	Rev. 01
	Date: 2021-08-16	Copyright: Trenz Electronic GmbH / TT	Page 1 of 30
	Filename: Legal Notices Modules.SchDoc		

TE0813-01

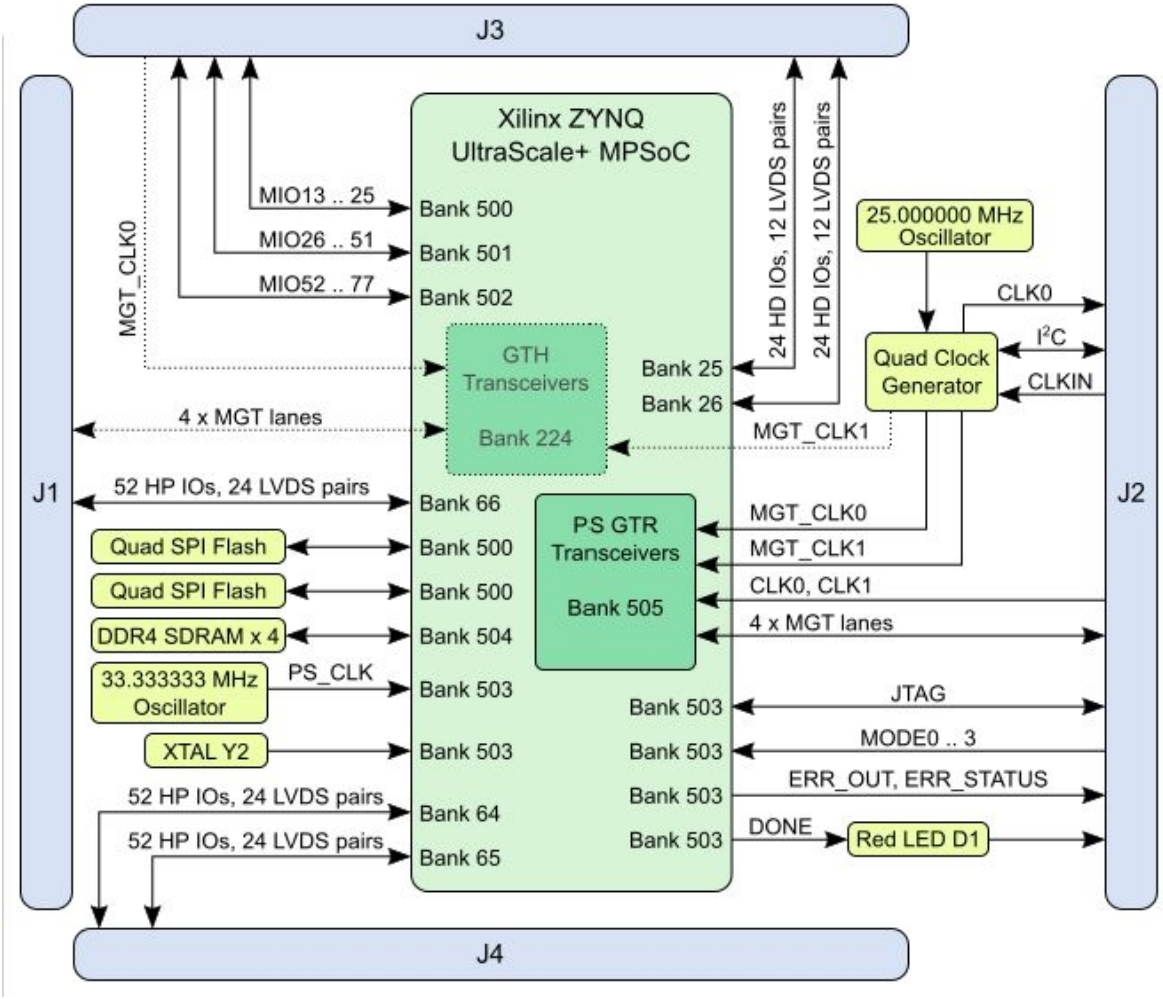

trenz electronic	Title: Module TE0813 - System Overview		
A4	Number: TE0813 4GE11-A		Rev. 01
Date: 2021-08-16	Copyright: 2015 Trenz Electronic GmbH		Page 2 of 30
Filename: TE0813-Overview.SchDoc			

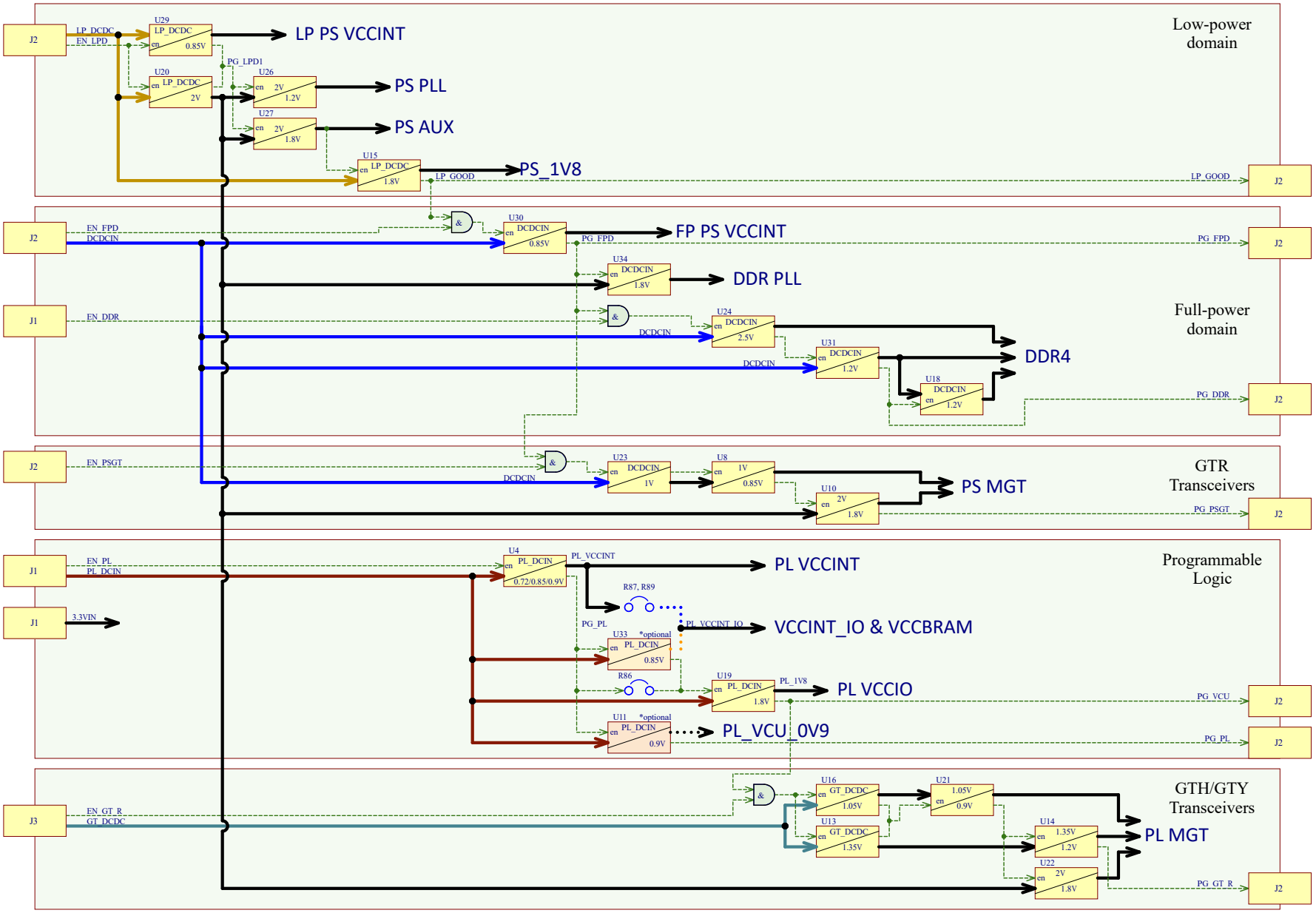

EN_GT_R — Net name

Power bus

Control signal

Power bus in FPGA speedgrade -1/-2/-3 assembly variants

Power bus in FPGA speedgrade -1L/-2L assembly variants (low power)

PL_DCIN 0.9V — Optional power converter

& — Logic AND gate

Power-on sequencing:

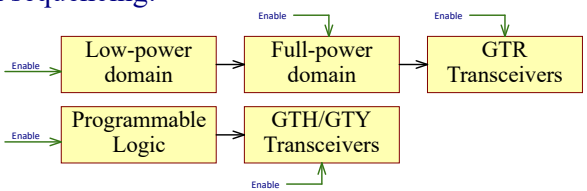

Title: TE0813 - Power Diagram			
A3	Nummer: TE0813 4GE11-A		Rev. 01
Datum: 2021-01-19	Copyright:Trenz Electronic GmbH / TT		Page 3 of 30
Filename: Power_Diagram.SchDoc			

U_J1
J1.SchDoc

U_J2
J2.SchDoc

U_J3
J3.SchDoc

U_J4
J4.SchDoc

U_DDR4-TERM
DDR4-TERM.SchDoc

U_B64
B64.SchDoc

U_B65
B65.SchDoc

U_B66
B66.SchDoc

U_B_GT
B_GT.SchDoc

U_PD
Power_Diagram.SchDoc

U_B_PS_GT
B_PS_GT.SchDoc

U_PS_DDR
PS_DDR.SchDoc

U_B_MIO
B_MIO.SchDoc

U_B_HD
B_HD.SchDoc

U_Clock
Clock.SchDoc

U_CONFIG
CONFIG.SchDoc

U_DDR4-RAM
DDR4-RAM.SchDoc

U_DDR4-RAM_2
DDR4-RAM_2.SchDoc

U_DDR4-RAM_3
DDR4-RAM_3.SchDoc

U_DDR4-RAM_4
DDR4-RAM_4.SchDoc

U_LN
Legal Notices Modules.SchDoc

U_ZU_POWER
ZU_POWER.SchDoc

U_ZU_PS_POWER
ZU_PS_POWER.SchDoc

U_POWER
POWER.SchDoc

U_POWER_1
POWER_1.SchDoc

U_POWER_2
POWER_2.SchDoc

U_POWER_4
POWER_3.SchDoc

U_REV_CH
Revision Changes.SchDoc

U_OVERVIEW
TE0813-Overview.SchDoc

Special notes:

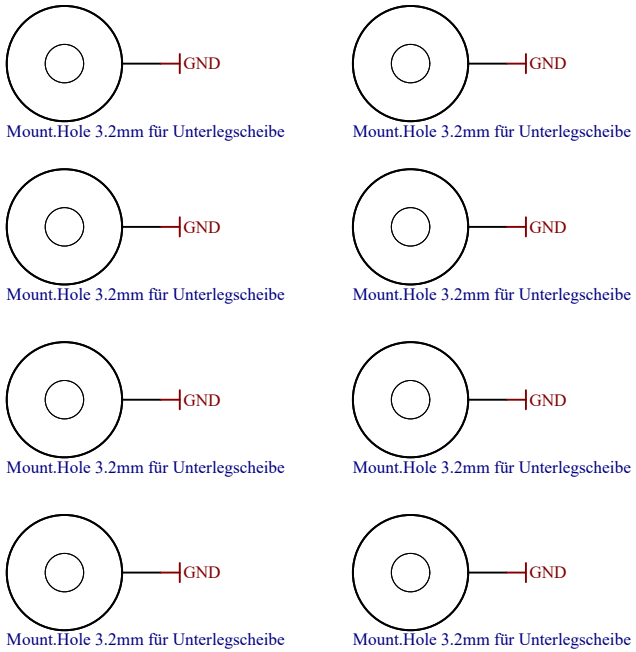

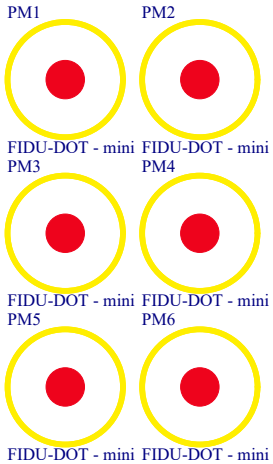

MECH1
TE Address Overlay
LOGO ADDRESS

LOGO1
TE Logo PRINT Layer
LOGO PRINT

Serial
Serial
Serialnumber 6,3 x 6.3mm

Assembly variant	4GE11-A
Created by	ED
Modified by	ED
Modified at	2021-07-08
SVN Revision	12304 [Locally Modified]

trenz electronic

Title: TE0813		
A4	Number: TE0813 4GE11-A	Rev. 01
Date: 2021-08-16	Copyright: Trenz Electronic GmbH / TT	Page 4 of 30
Filename: TE0813.SchDoc		

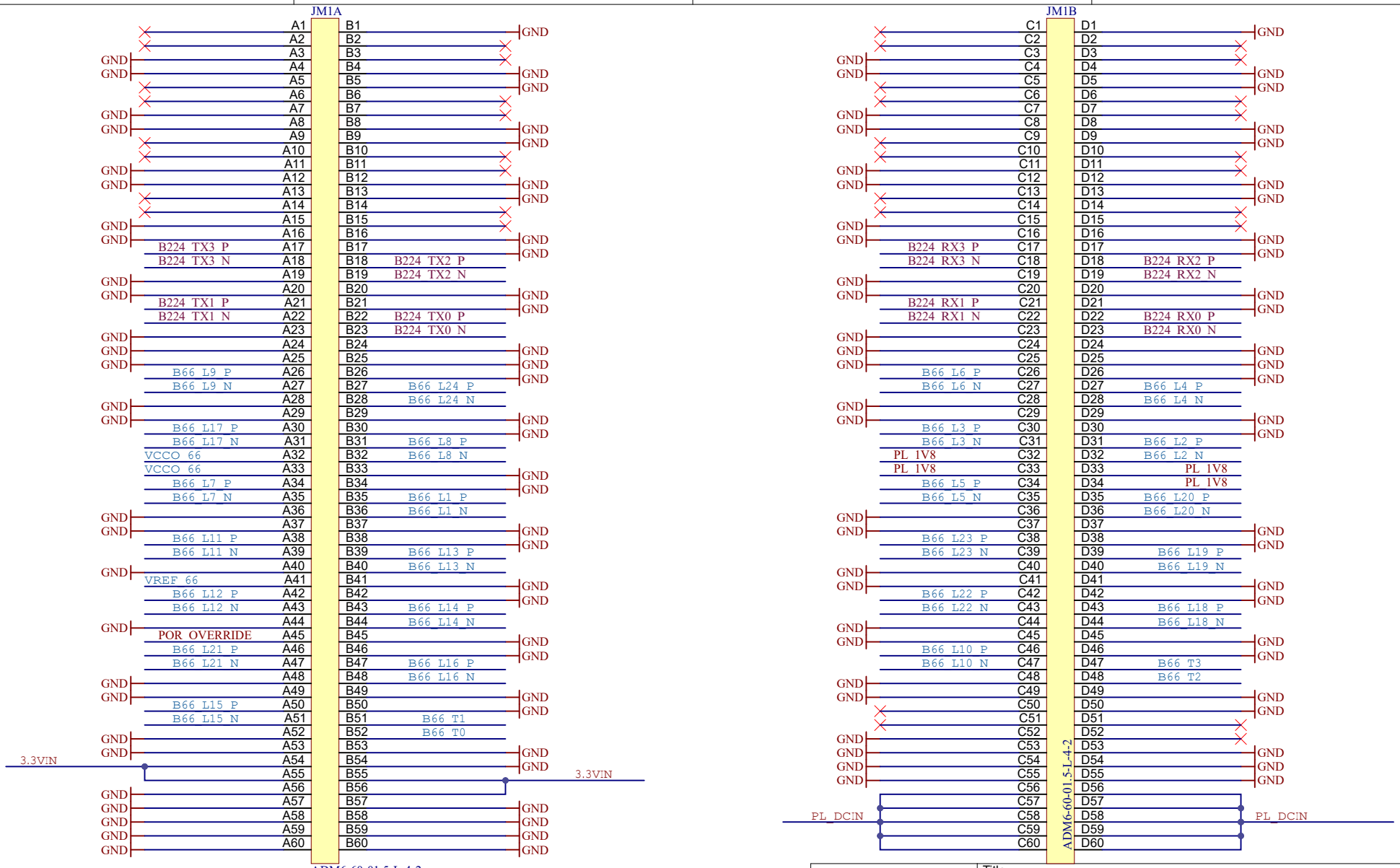

trenz electronic	Title: TE0813 - Connector J1		
A4	Number: TE0813 4GE11-A		Rev. 01
Date: 2021-08-16	Copyright: Trenz Electronic GmbH / TT		Page 5 of 30
	Filename: J1.SchDoc		

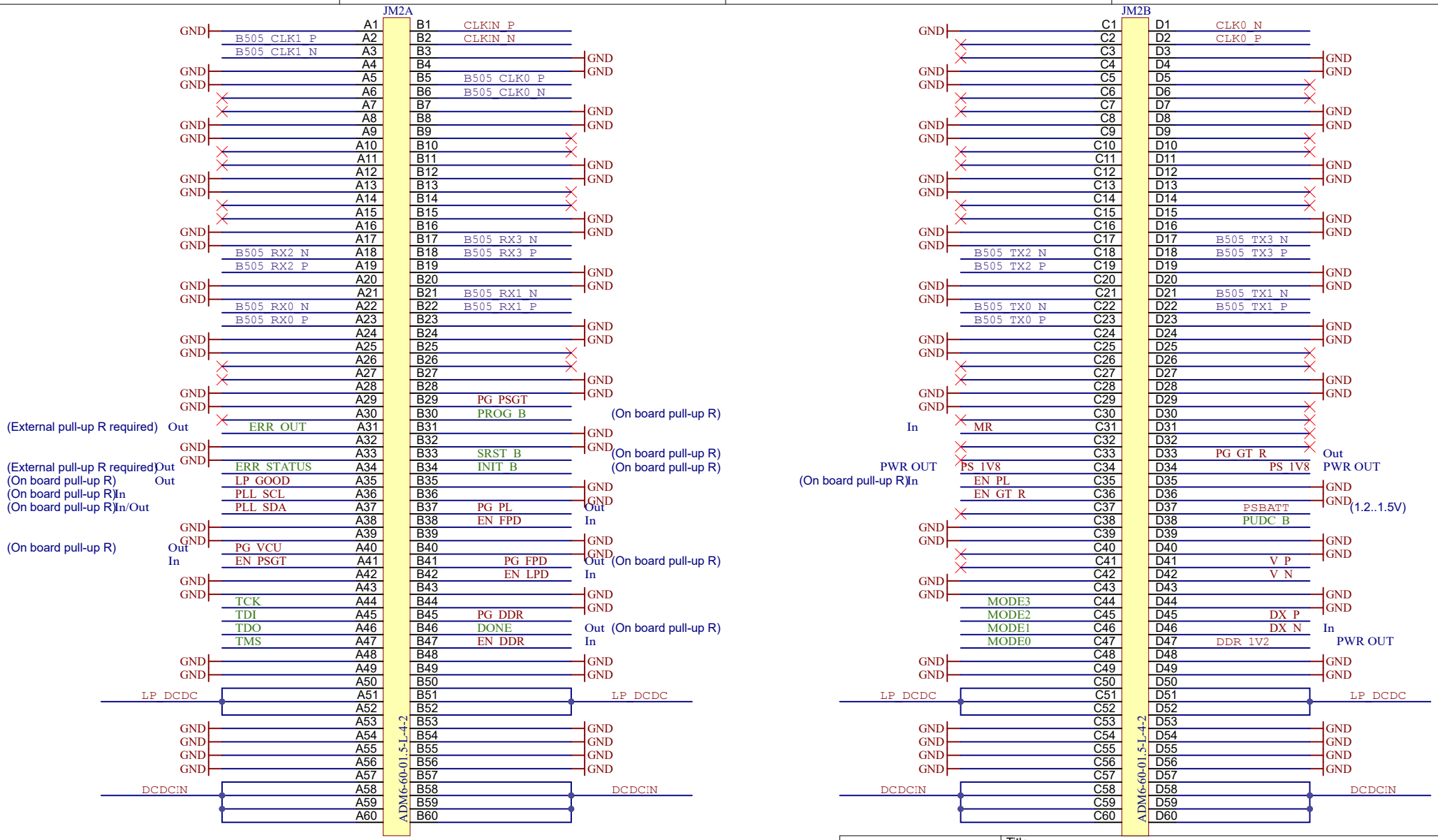

Title: TE0813 - Connector J2			
A4	Number: TE0813 4GE11-A		Rev. 01
Date: 2021-08-16	Copyright: Trenz Electronic GmbH / TT		Page 6 of 30
Filename: J2.SchDoc			

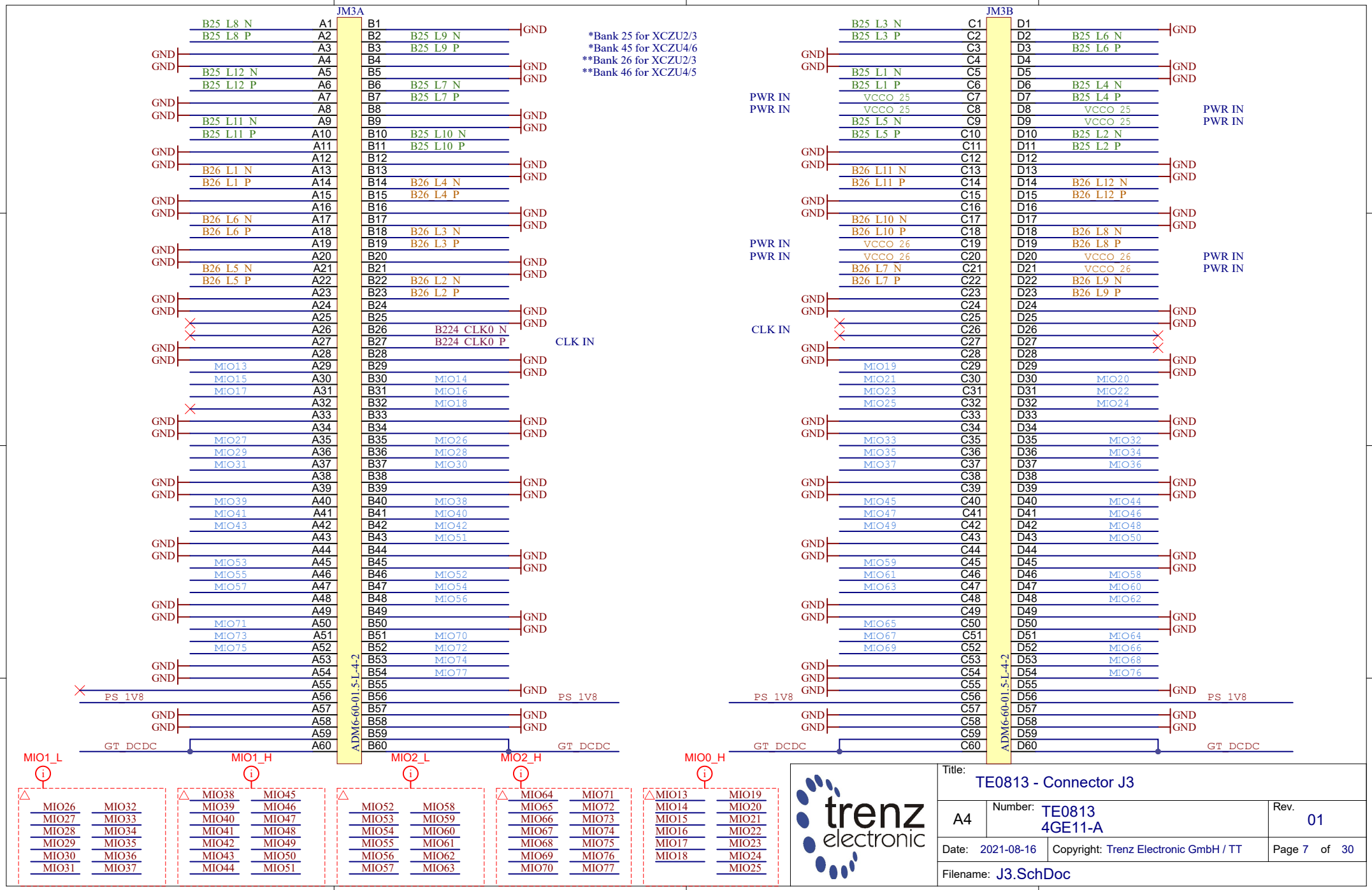
JM3A
JM3B
ADM6-60-01.5-L-4-2
*Bank 25 for XCZU2/3
*Bank 45 for XCZU4/6
**Bank 26 for XCZU2/3
**Bank 46 for XCZU4/5
CLK IN
PWR IN
PS 1V8
GT DCDC
GND
MIO1_L
MIO1_H
MIO2_L
MIO2_H
MIO0_H
trenz electronic
Title: TE0813 - Connector J3
A4
Number: TE0813 4GE11-A
Rev. 01
Date: 2021-08-16
Copyright: Trenz Electronic GmbH / TT
Page 7 of 30
Filename: J3.SchDoc

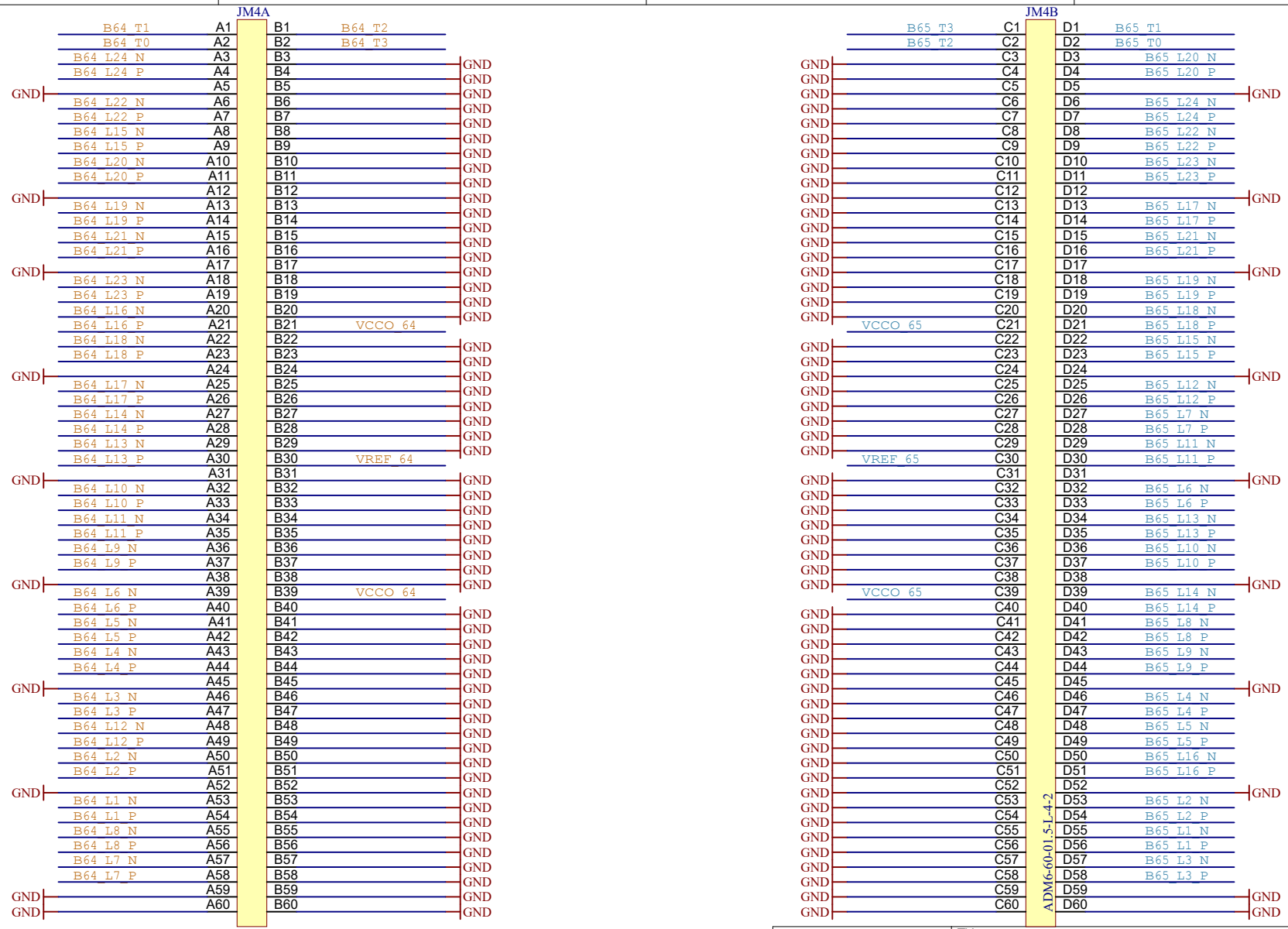

trenz electronic	Title: TE0813 - Connector J4		
A4	Number: TE0813 4GE11-A		Rev. 01
Date: 2021-08-16	Copyright: Trenz Electronic GmbH / TT		Page 8 of 30
	Filename: J4.SchDoc		

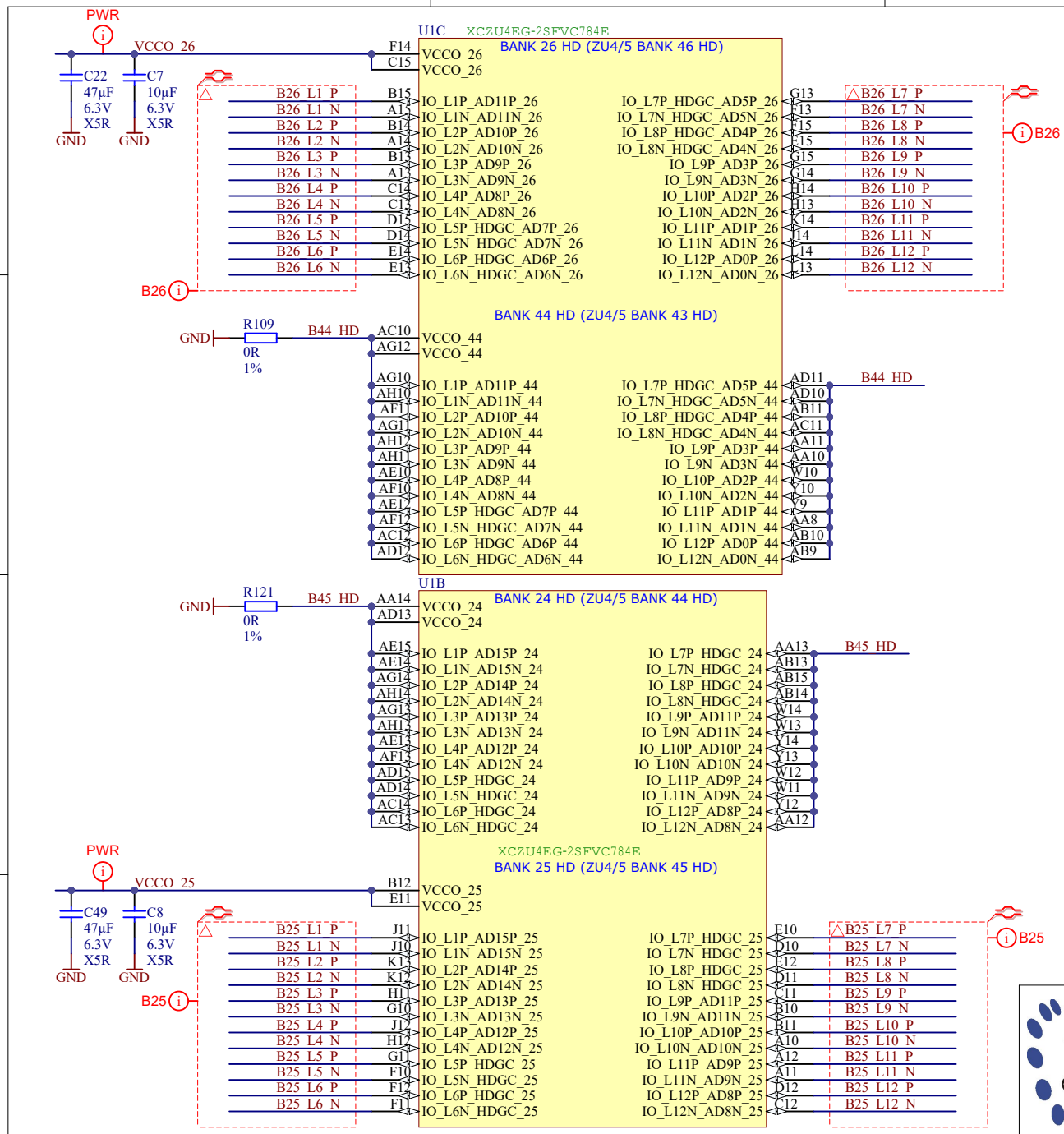

trenz electronic	Title: TE0813 - HD Banks		
A4	Number: TE0813 4GE11-A		Rev. 01
Date: 2021-08-16	Copyright: Trenz Electronic GmbH / TT		Page 9 of 30
Filename: B_HD.SchDoc			

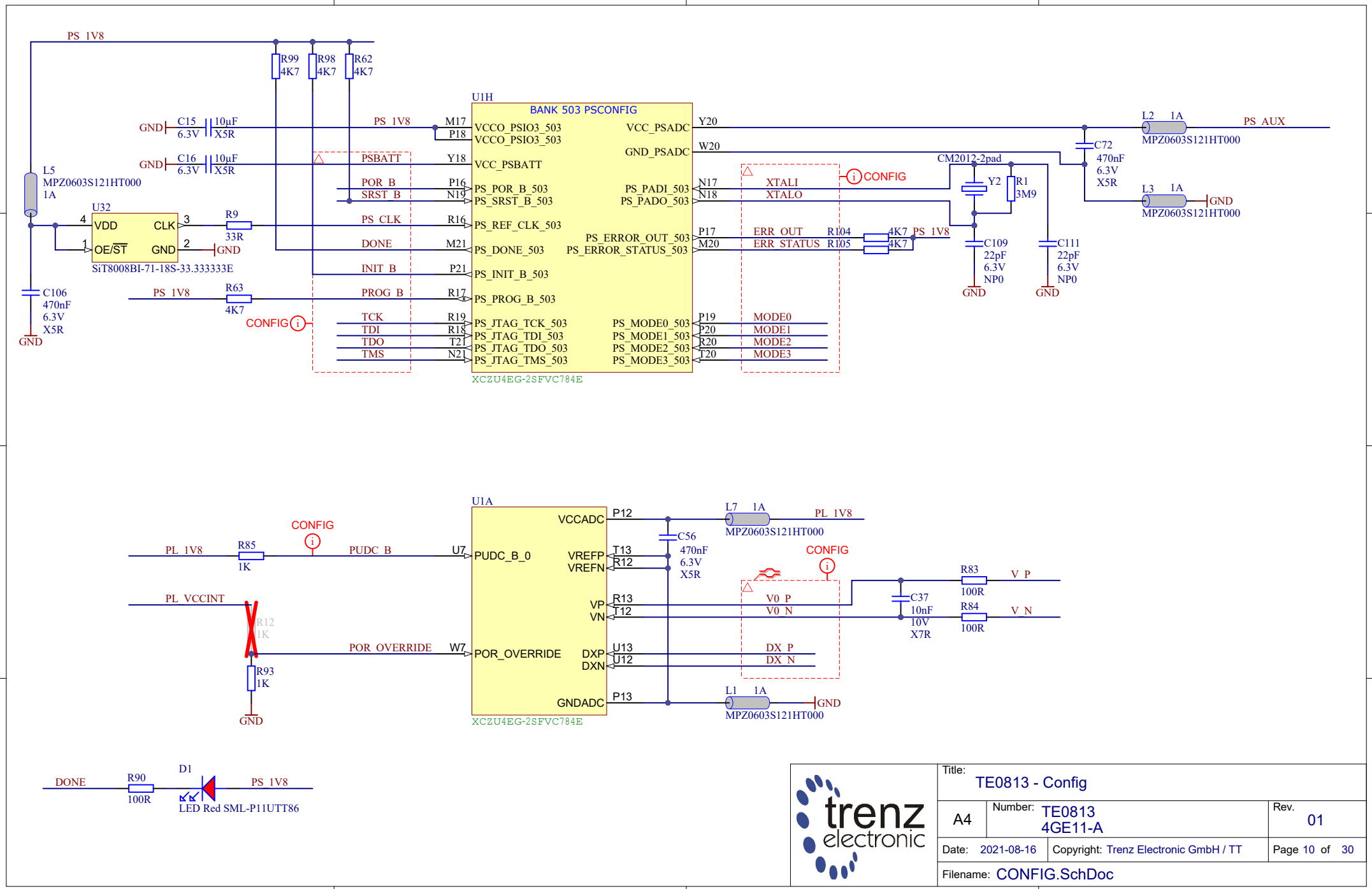

trenz electronic	Title: TE0813 - Config		
A4	Number: TE0813 4GE11-A		Rev. 01
Date: 2021-08-16	Copyright: Trenz Electronic GmbH / TT		Page 10 of 30
	Filename: CONFIG.SchDoc		

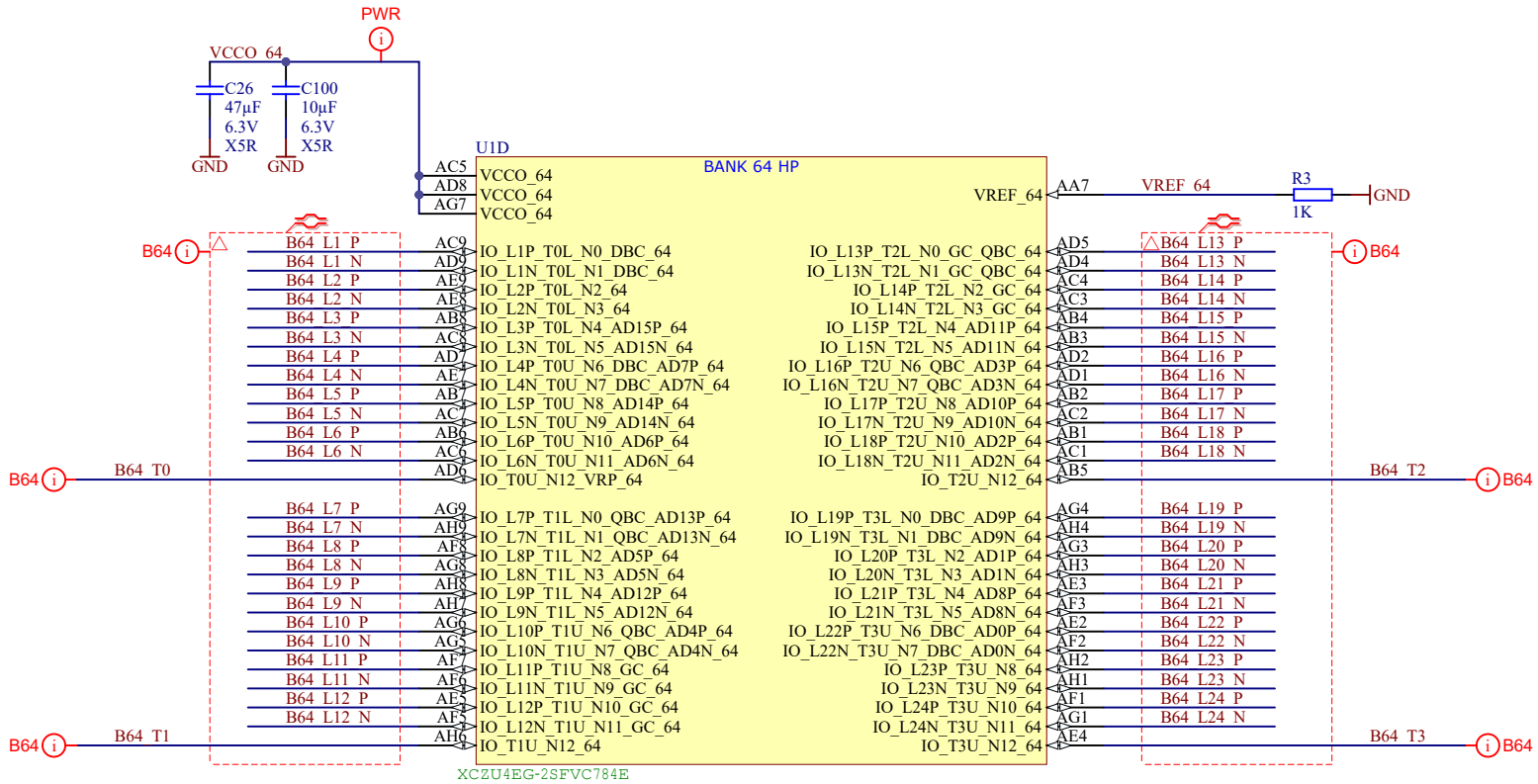

trenz electronic	Title: TE0813 - B64		
A4	Number: TE0813 4GE11-A		Rev. 01
Date: 2021-08-16	Copyright: Trenz Electronic GmbH / TT		Page 11 of 30
	Filename: B64.SchDoc		

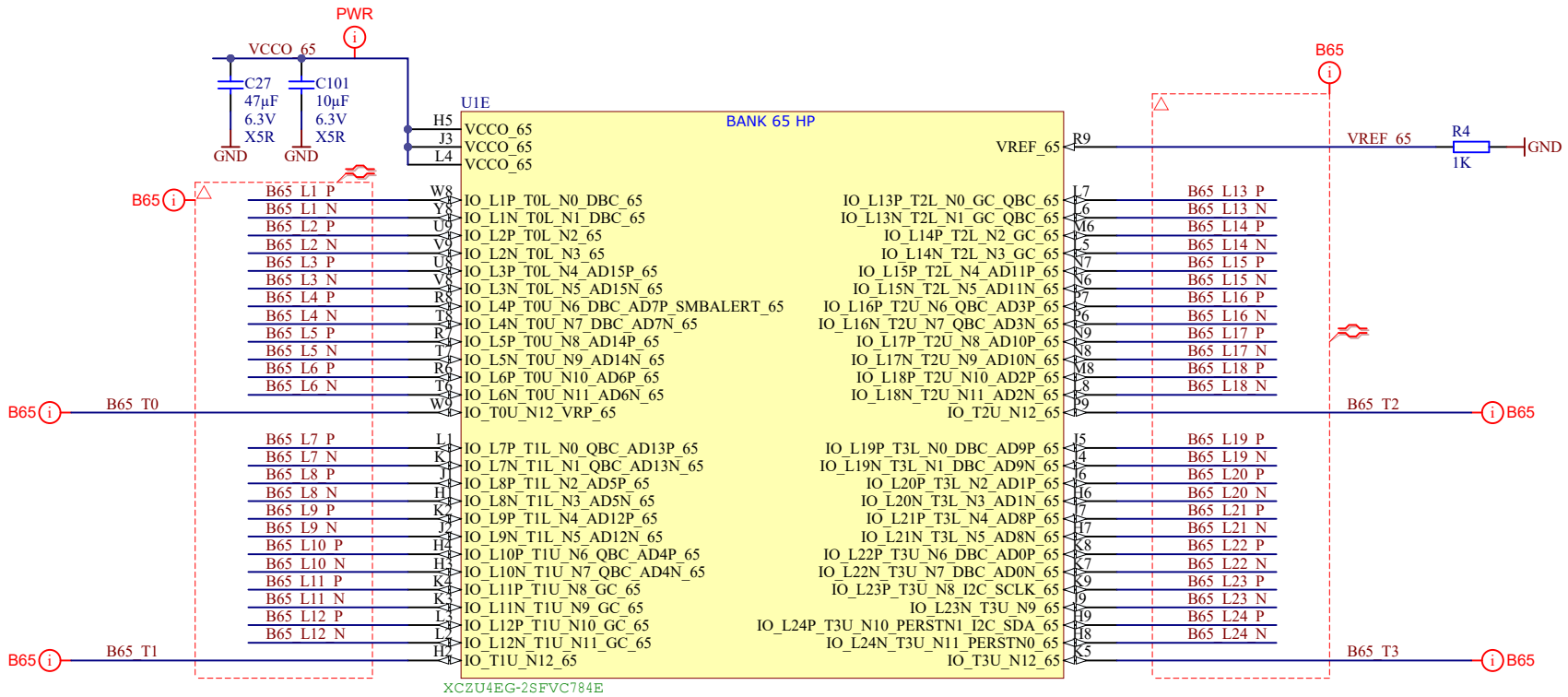

trenz electronic	Title: TE0813 - B65		
A4	Number: TE0813 4GE11-A		Rev. 01
Date: 2021-08-16	Copyright: Trenz Electronic GmbH / TT		Page 12 of 30
	Filename: B65.SchDoc		

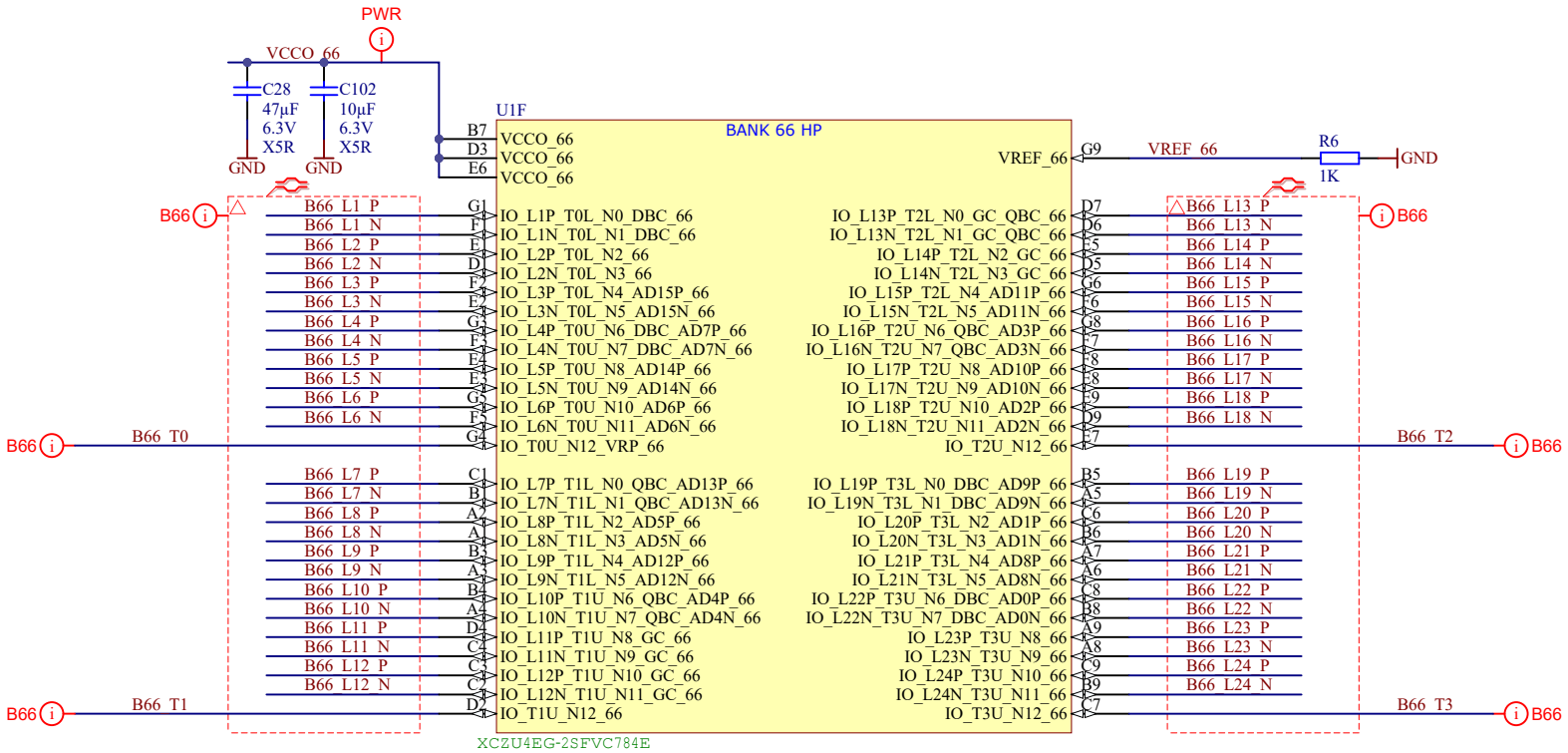

trenz electronic	Title: TE0813 - B66		
A4	Number: TE0813 4GE11-A		Rev. 01
Date: 2021-08-16	Copyright: Trenz Electronic GmbH / TT		Page 13 of 30
Filename: B66.SchDoc			

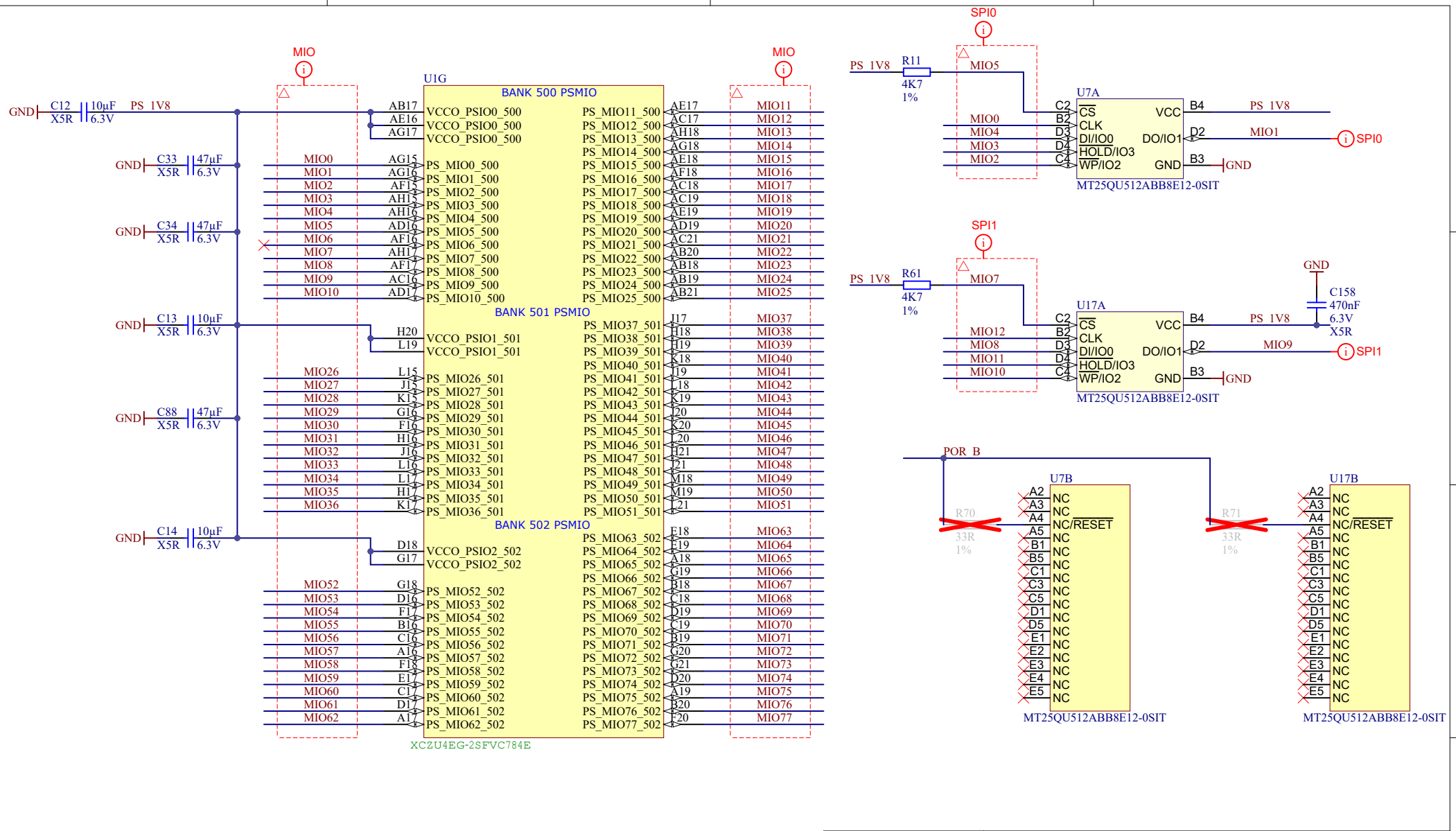

trenz electronic	Title: TE0813 - MIO Banks		
A4	Number: TE0813 4GE11-A		Rev. 01
Date: 2021-08-16	Copyright: Trenz Electronic GmbH / TT		Page 14 of 30
Filename: B_MIO.SchDoc			

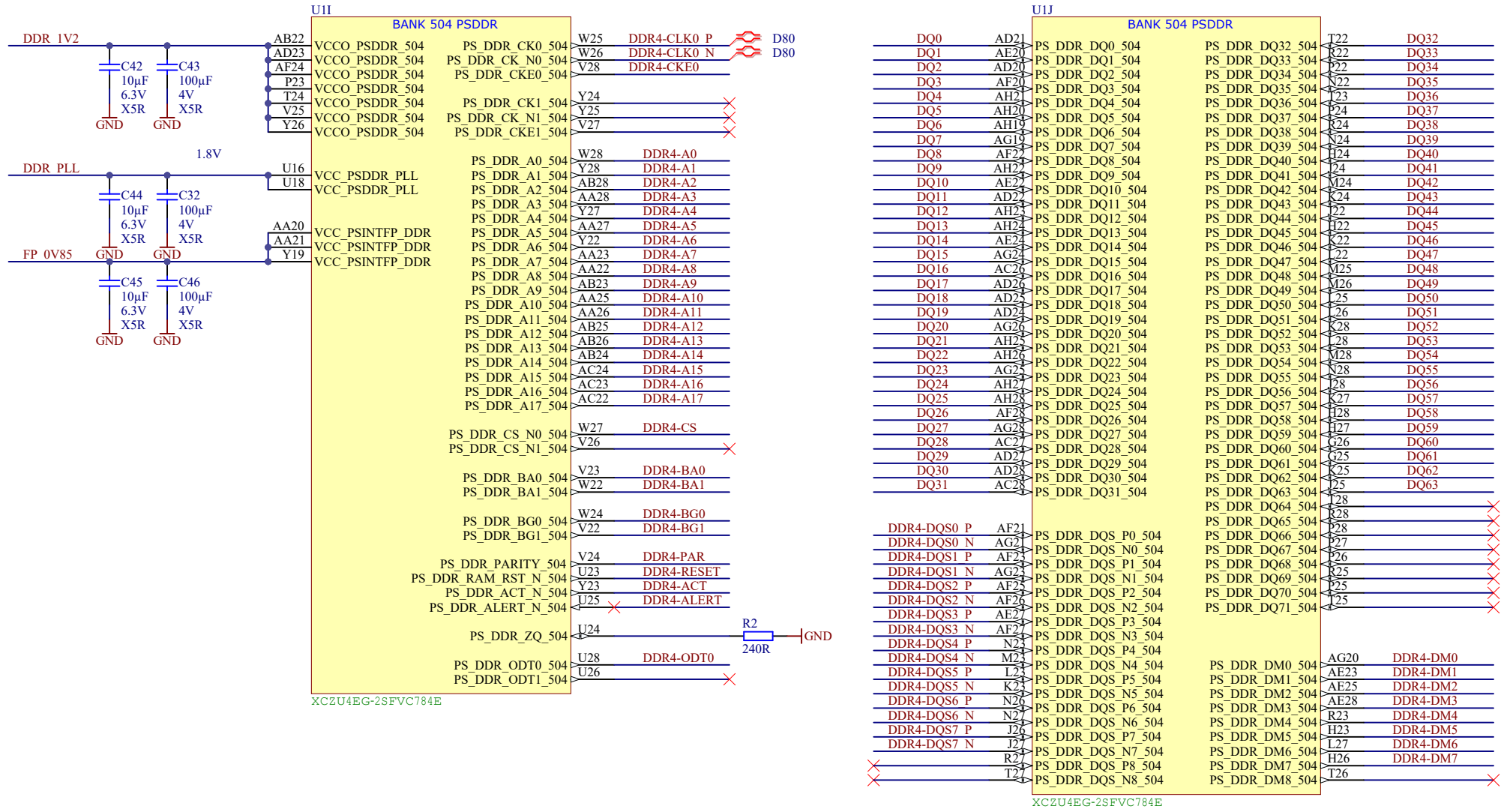

trenz electronic	Title: TE0813 - PS_DDR		
A4	Number: TE0813 4GE11-A		Rev. 01
Date: 2021-08-16	Copyright: Trenz Electronic GmbH / TT		Page 15 of 30
	Filename: PS_DDR.SchDoc		

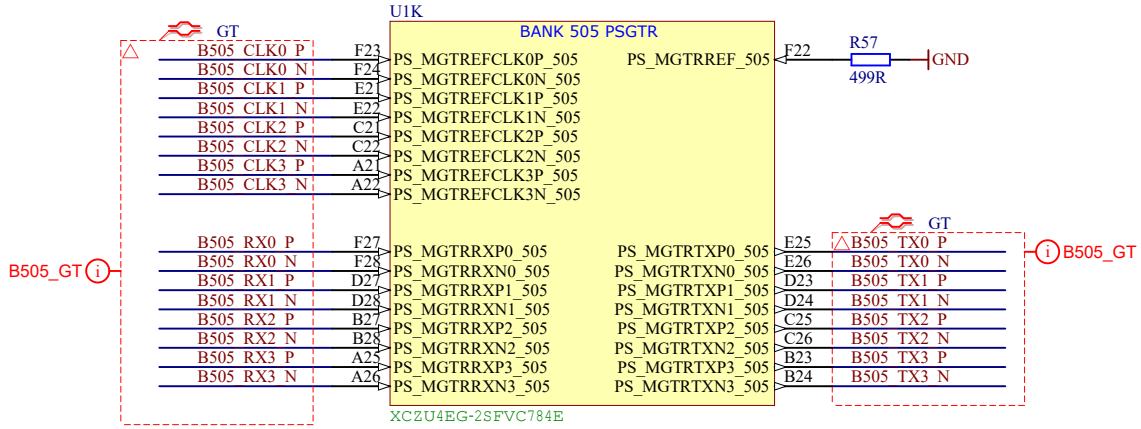

trenz electronic	Title: TE0813 - PS_GT		
A4	Number: TE0813 4GE11-A		Rev. 01
Date: 2021-08-16	Copyright: Trenz Electronic GmbH / TT		Page 16 of 30
Filename: B_PS_GT.SchDoc			

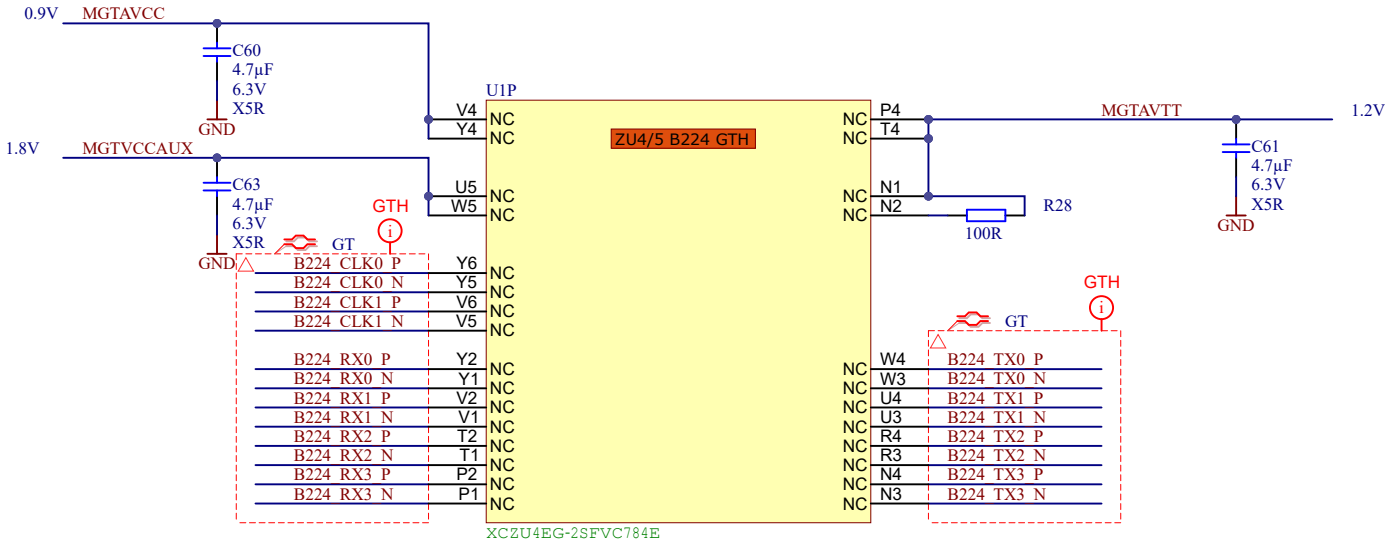

trenz electronic	Title: TE0813 - B224GTH		
A4	Number: TE0813 4GE11-A		Rev. 01
Date: 2021-08-16	Copyright: Trenz Electronic GmbH / TT		Page 17 of 30
Filename: B_GT.SchDoc			

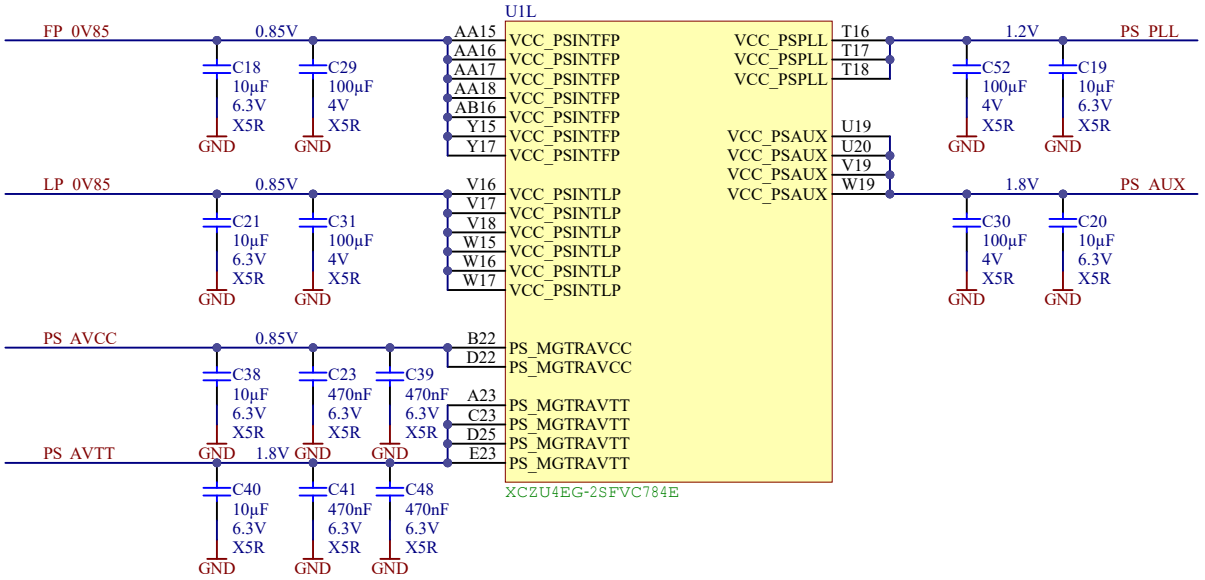

trenz electronic	Title: TE0813 - ZU_PS_POWER		
A4	Number: TE0813 4GE11-A		Rev. 01
Date: 2021-08-16	Copyright: Trenz Electronic GmbH / TT		Page 18 of 30
	Filename: ZU_PS_POWER.SchDoc		

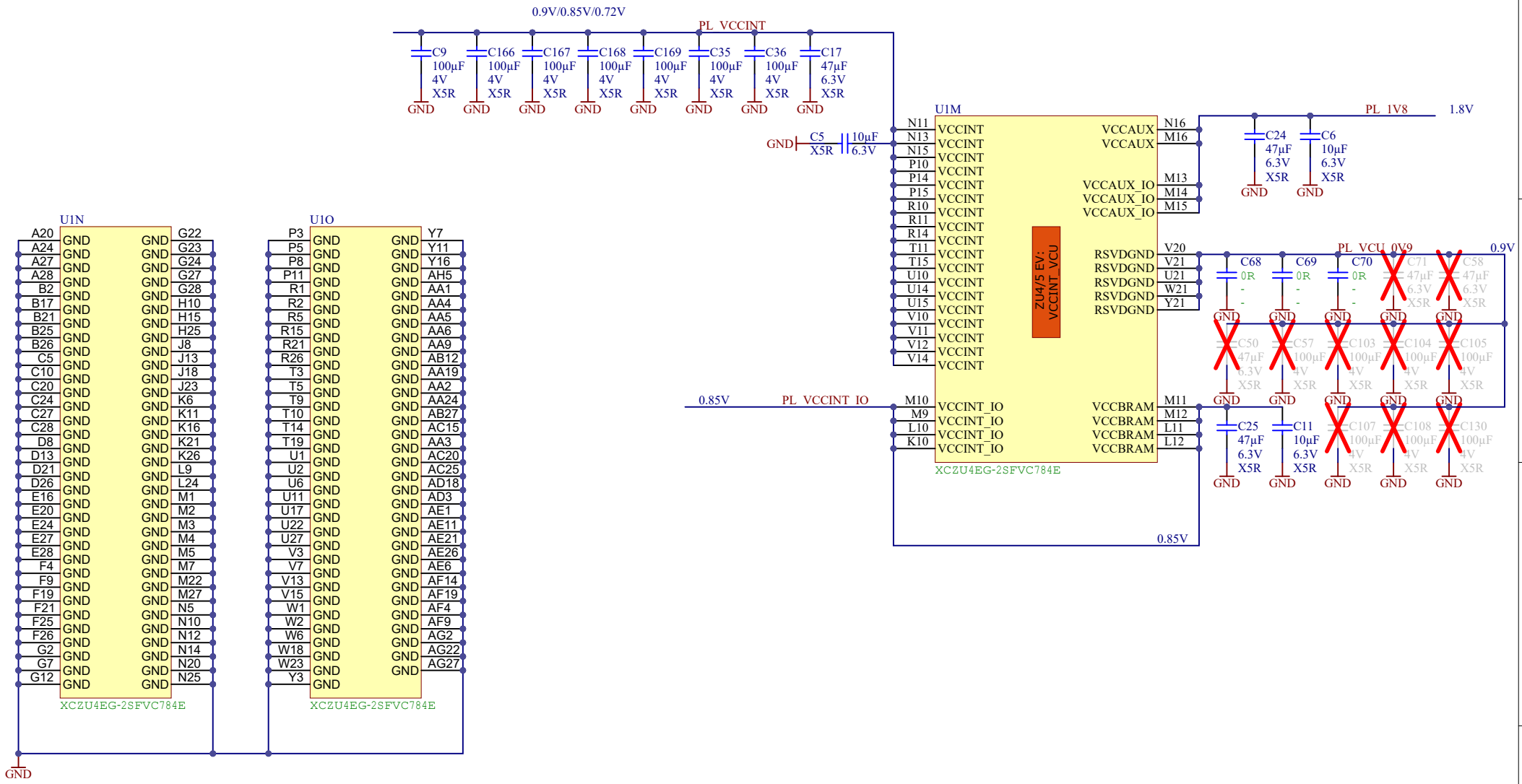

trenz electronic	Title: TE0813 - ZU_POWER		
A4	Number: TE0813 4GE11-A		Rev. 01
Date: 2021-08-16	Copyright: Trenz Electronic GmbH / TT		Page 19 of 30
Filename: ZU_POWER.SchDoc			

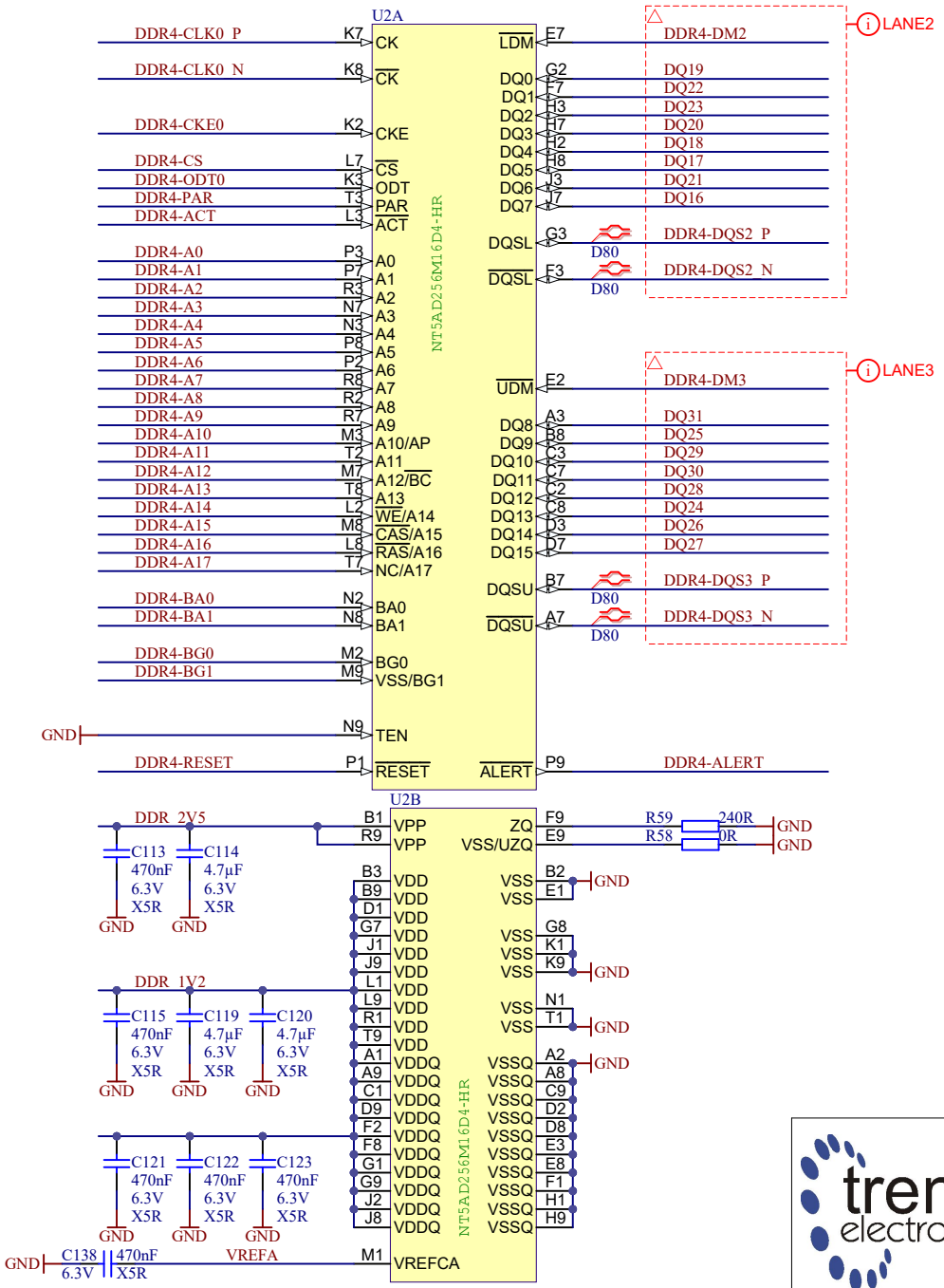

Title: TE0813 - DDR4_1_RAM

A4	Number: TE0813 4GE11-A	Rev. 01
Date: 2021-08-16	Copyright: Trenz Electronic GmbH / TT	Page 20 of 30
Filename: DDR4-RAM.SchDoc		

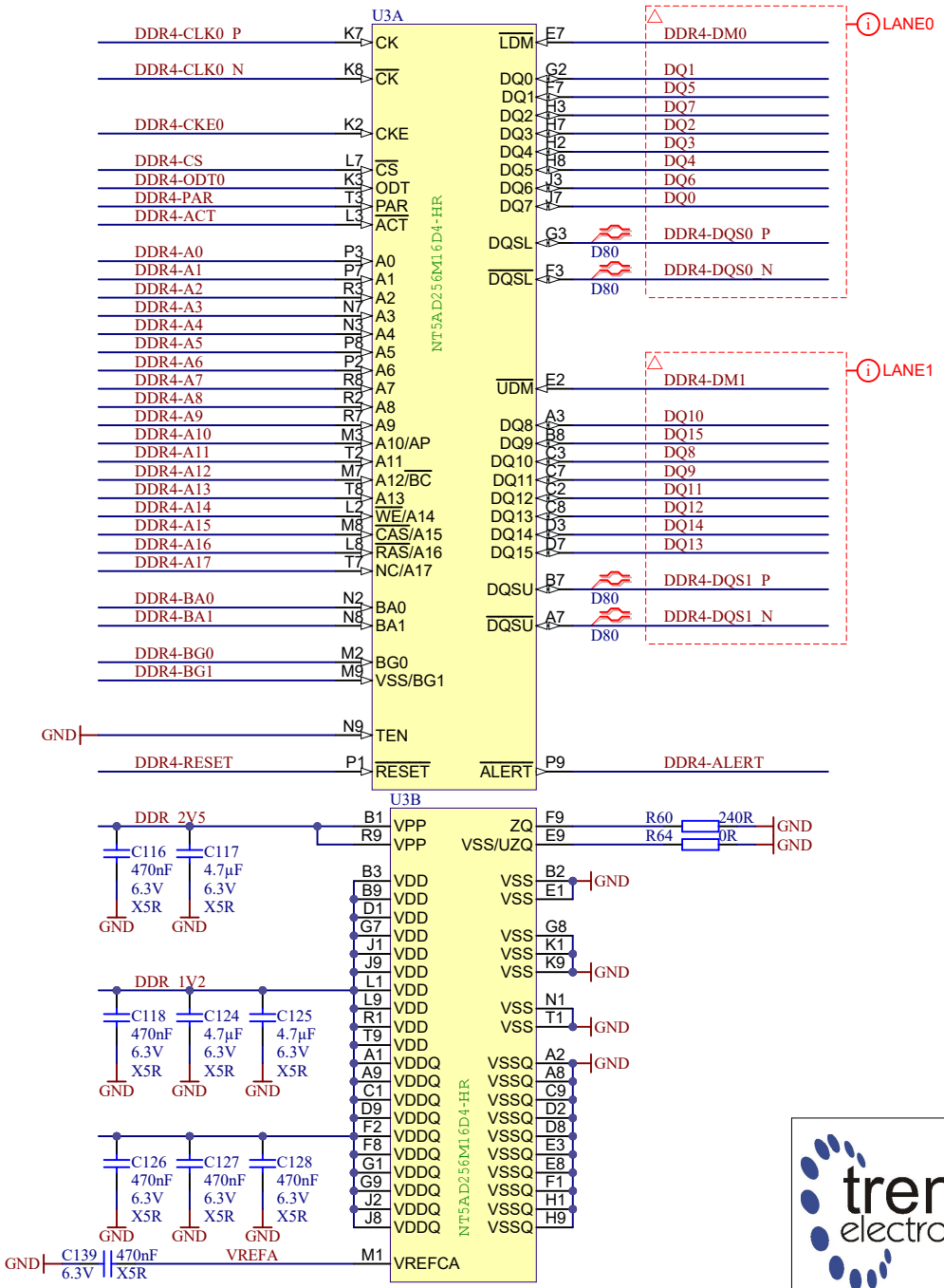

trenz electronic	Title: TE0813 - DDR4_2_RAM		
A4	Number: TE0813 4GE11-A		Rev. 01
Date: 2021-08-16	Copyright: Trenz Electronic GmbH / TT		Page 21 of 30
Filename: DDR4-RAM_2.SchDoc			

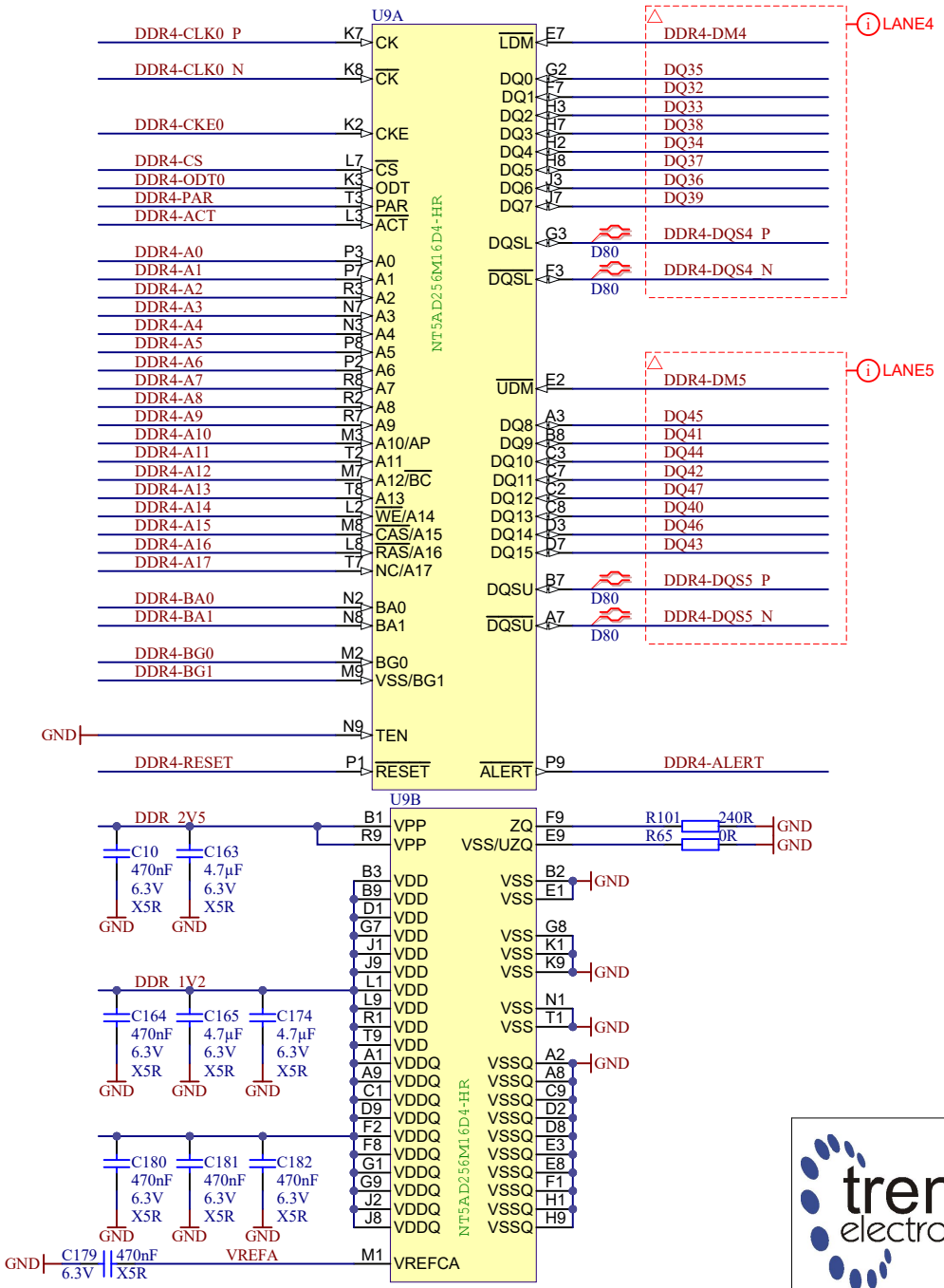

trenz electronic

Title: TE0813 - DDR4_3_RAM			
A4	Number: TE0813 4GE11-A		Rev. 01
Date: 2021-08-16	Copyright: Trenz Electronic GmbH / TT		Page 22 of 30
Filename: DDR4-RAM_3.SchDoc			

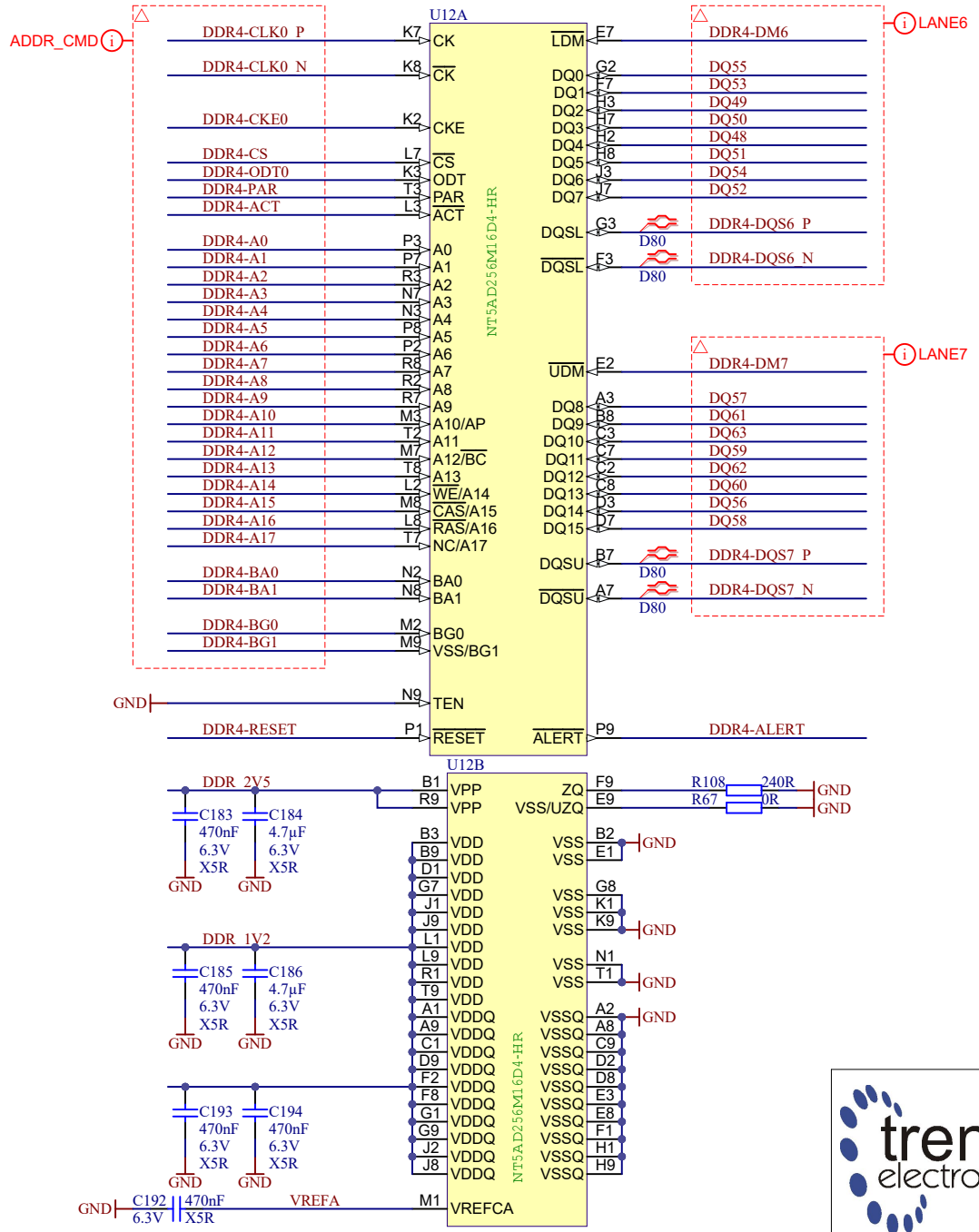

trenz electronic	Title: TE0813 - DDR4_4_RAM	
A4	Number: TE0813 4GE11-A	Rev. 01
Date: 2021-08-16	Copyright: Trenz Electronic GmbH / TT	Page 23 of 30
	Filename: DDR4-RAM_4.SchDoc	

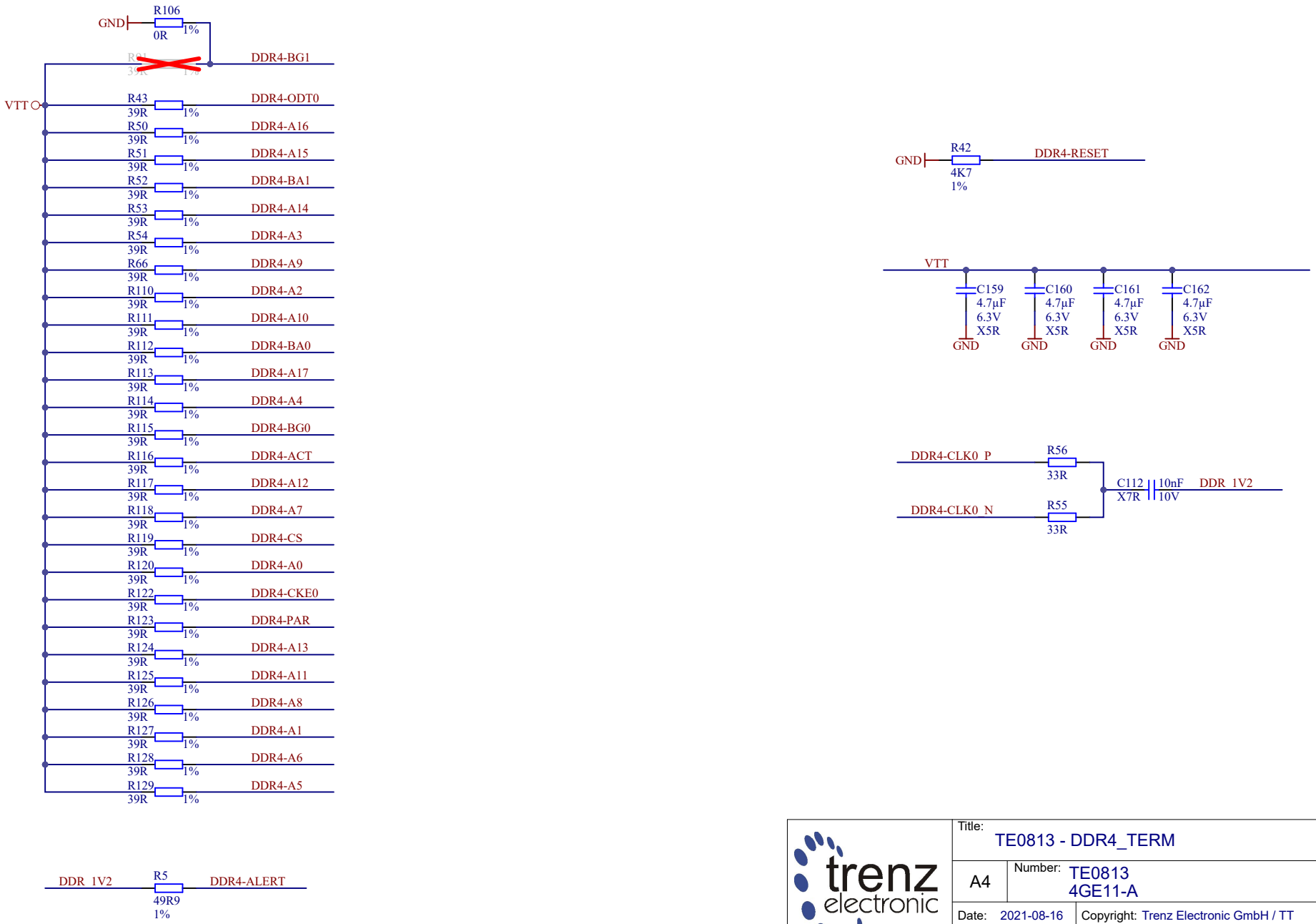

trenz electronic	Title: TE0813 - DDR4_TERM		
A4	Number: TE0813 4GE11-A		Rev. 01
Date: 2021-08-16	Copyright: Trenz Electronic GmbH / TT		Page 24 of 30
Filename: DDR4-TERM.SchDoc			

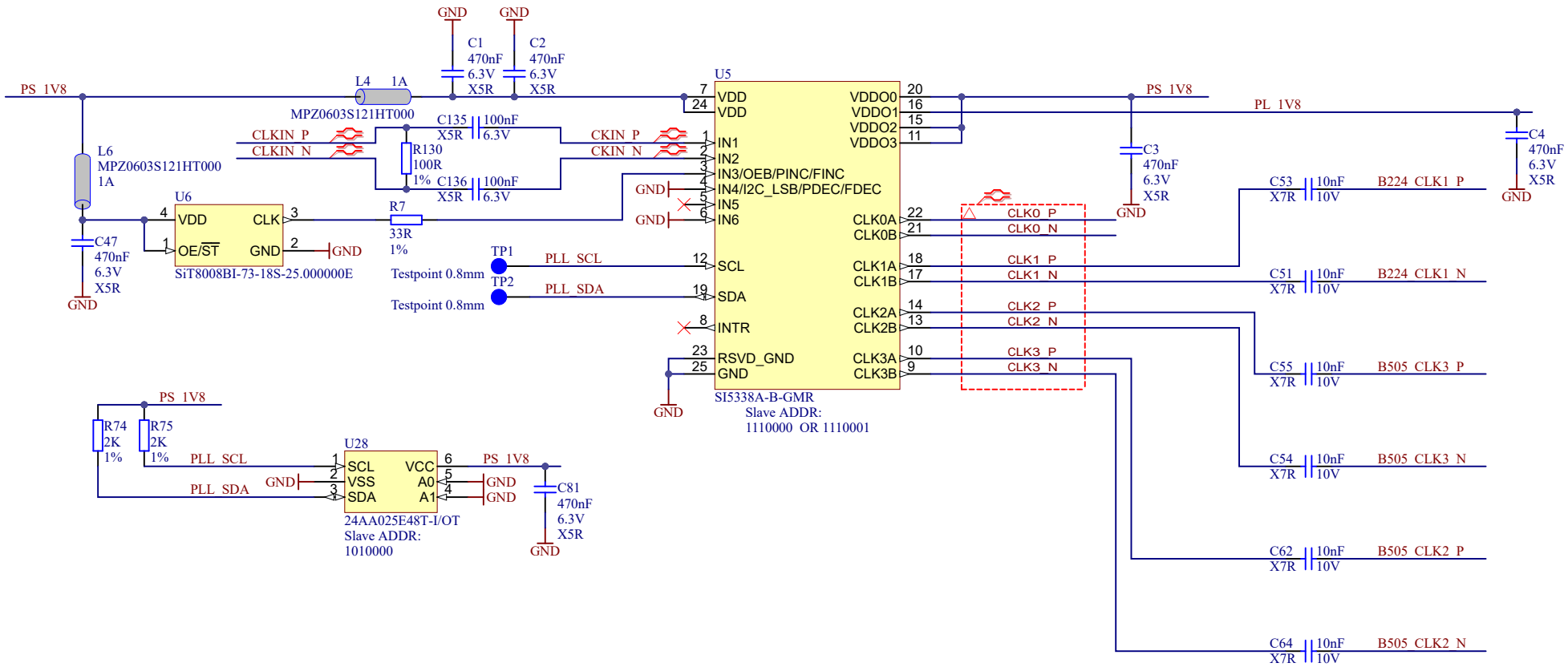

trenz electronic	Title: TE0813 - CLOCK		
A4	Number: TE0813 4GE11-A		Rev. 01
Date: 2021-08-16	Copyright: Trenz Electronic GmbH / TT		Page 25 of 30
Filename: Clock.SchDoc			

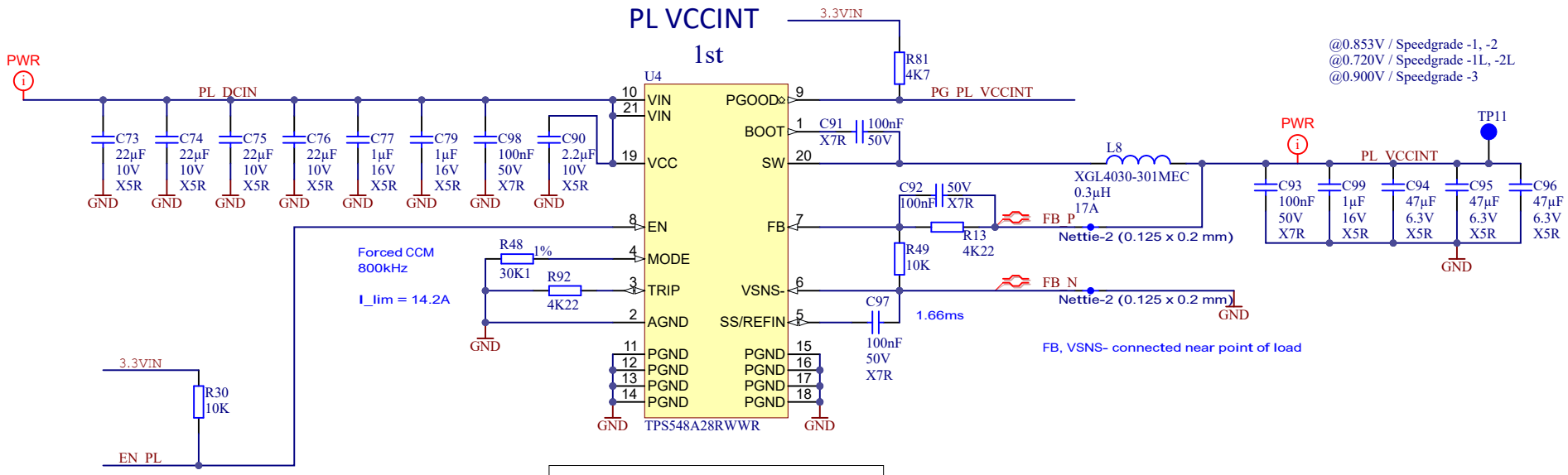

FPGA Speed grade:		
-1LI / -2LE	R13 - 2K, R49 - 10K	PL_VCCINT = 0.720V
-1 / -2	R13 - 4K22, R49 - 10K	PL_VCCINT = 0.853V
-3E	R13 - 10K, R49 - 20K	PL_VCCINT = 0.900V

U4 pin compatible with
-- TPS548B28 (20A)
-- TPS54JA20 (12A)

trenz electronic	Title: TE0813 - POWER		
A4	Number: TE0813 4GE11-A		Rev. 01
Date: 2021-08-16	Copyright: Trenz Electronic GmbH / TT		Page 26 of 30
Filename: POWER.SchDoc			

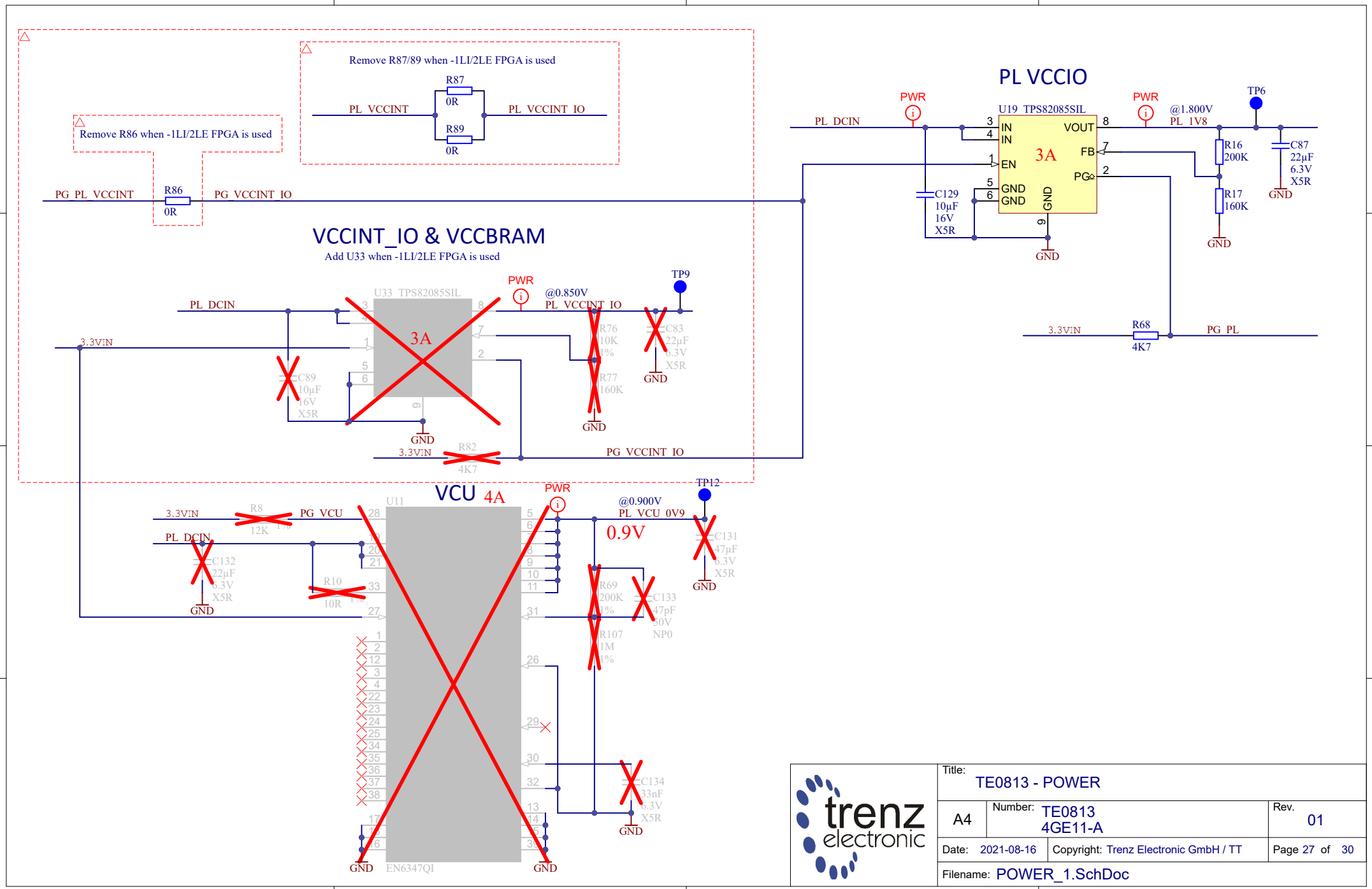

trenz electronic	Title: TE0813 - POWER	
A4	Number: TE0813 4GE11-A	Rev. 01
Date: 2021-08-16	Copyright: Trenz Electronic GmbH / TT	Page 27 of 30
	Filename: POWER_1.SchDoc	

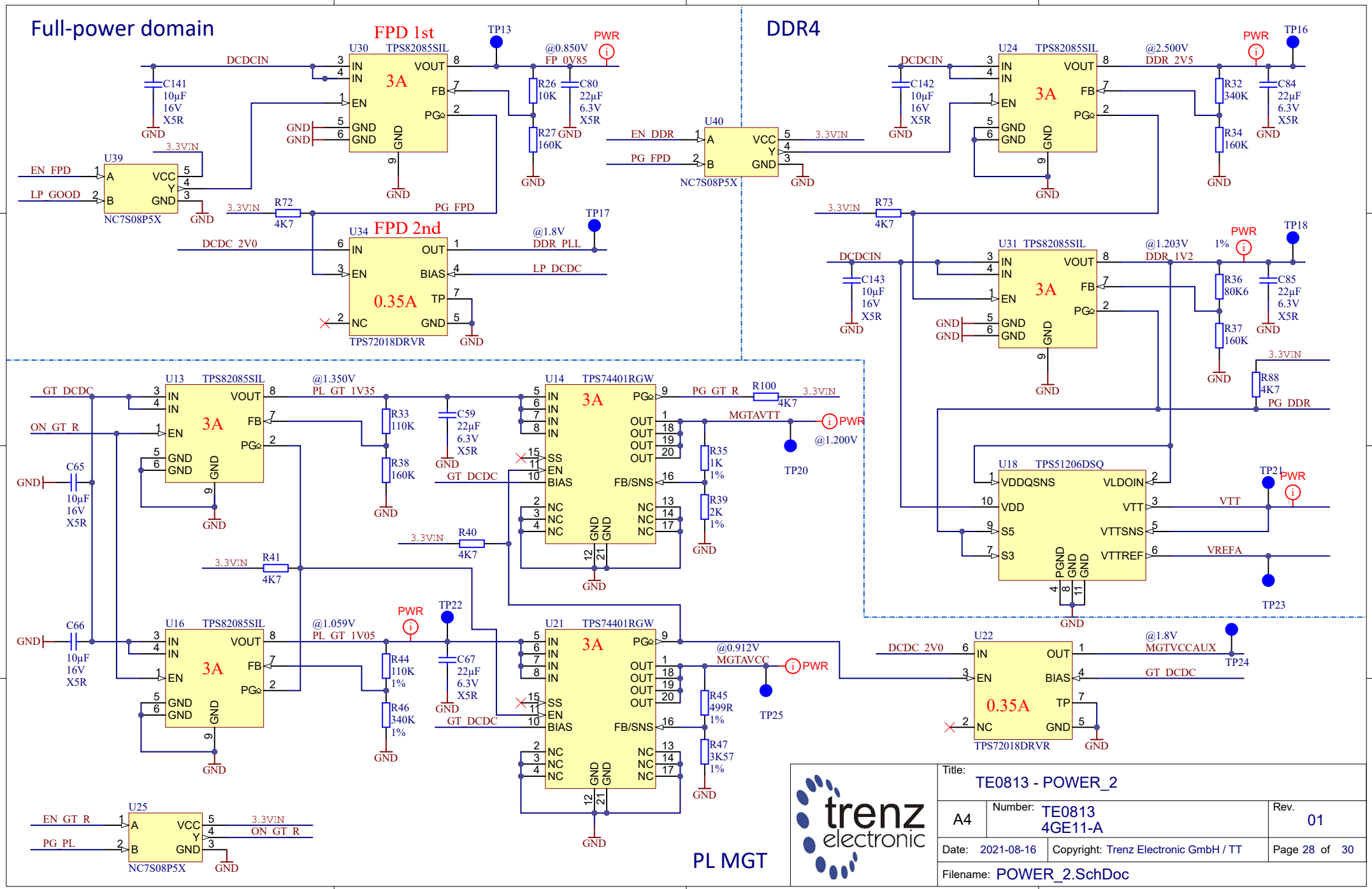
Full-power domain
FPD 1st
U30 TPS82085SIL
3A
DCDCIN
C141 10µF 16V X5R
TP13
@0.850V FP_0V85
PWR
R26 10K
C80 22µF 6.3V X5R
R27 160K
U39
EN_FPD
LP_GOOD
NC7S08P5X
3.3VIN
R72 4K7
PG_FPD
FPD 2nd
U34
0.35A
TPS72018DRVR
DCDC_2V0
TP17
@1.8V DDR_PLL
LP_DCDC
U40
EN_DDR
PG_FPD
NC7S08P5X
DDR4
U24 TPS82085SIL
@2.500V DDR_2V5
TP16
C142 10µF 16V X5R
R32 340K
C84 22µF 6.3V X5R
R34 160K
R73 4K7
U31 TPS82085SIL
@1.203V DDR_1V2
1%
TP18
C143 10µF 16V X5R
R36 80K6
C85 22µF 6.3V X5R
R37 160K
R88 4K7
PG_DDR
U18 TPS51206DSQ
VDDQSNS
VDD
S5
S3
VLDOIN
VTT
VTTSNS
VTTREF
VREFA
TP21
TP23
U13 TPS82085SIL
GT_DCDC
ON_GT_R
C65 10µF 16V X5R
@1.350V PL_GT_1V35
R33 110K
R38 160K
C59 22µF 6.3V X5R
U14 TPS74401RGW
PG_GT_R
R100 4K7
MGTAVTT
@1.200V
TP20
R35 1K 1%
R39 2K 1%
R40 4K7
R41 4K7
U16 TPS82085SIL
C66 10µF 16V X5R
@1.059V PL_GT_1V05
R44 110K 1%
R46 340K 1%
TP22
C67 22µF 6.3V X5R
U21 TPS74401RGW
@0.912V MGTAVCC
TP25
R45 499R 1%
R47 3K57 1%
U22
DCDC_2V0
@1.8V MGTVCCAUX
TP24
U25
EN_GT_R
PG_PL
NC7S08P5X
PL MGT
trenz electronic
Title: TE0813 - POWER_2
A4
Number: TE0813 4GE11-A
Rev. 01
Date: 2021-08-16
Copyright: Trenz Electronic GmbH / TT
Page 28 of 30
Filename: POWER_2.SchDoc

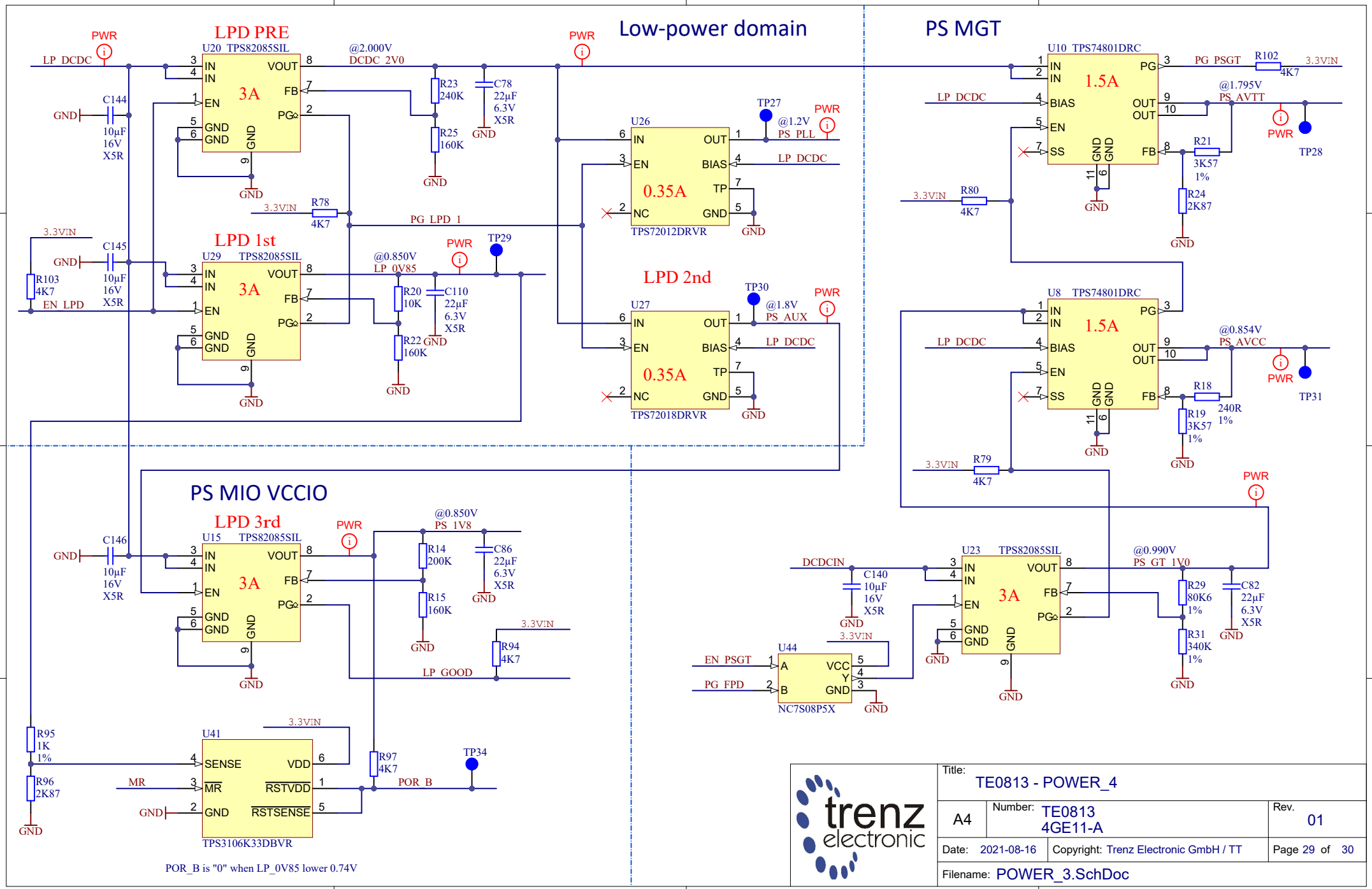

Title: TE0813 - POWER_4		
A4	Number: TE0813 4GE11-A	Rev. 01
Date: 2021-08-16	Copyright: Trenz Electronic GmbH / TT	Page 29 of 30
Filename: POWER_3.SchDoc		

REV	DATE	Description	
-01	2021-05	Initial revision	VT

trenz electronic	Title: TE0813 - Revision History		
A4	Number: TE0813 4GE11-A		Rev. 01
Date: 2021-07-26	Copyright: Trenz Electronic GmbH		Page 30 of 30
Filename: Revision Changes.SchDoc			