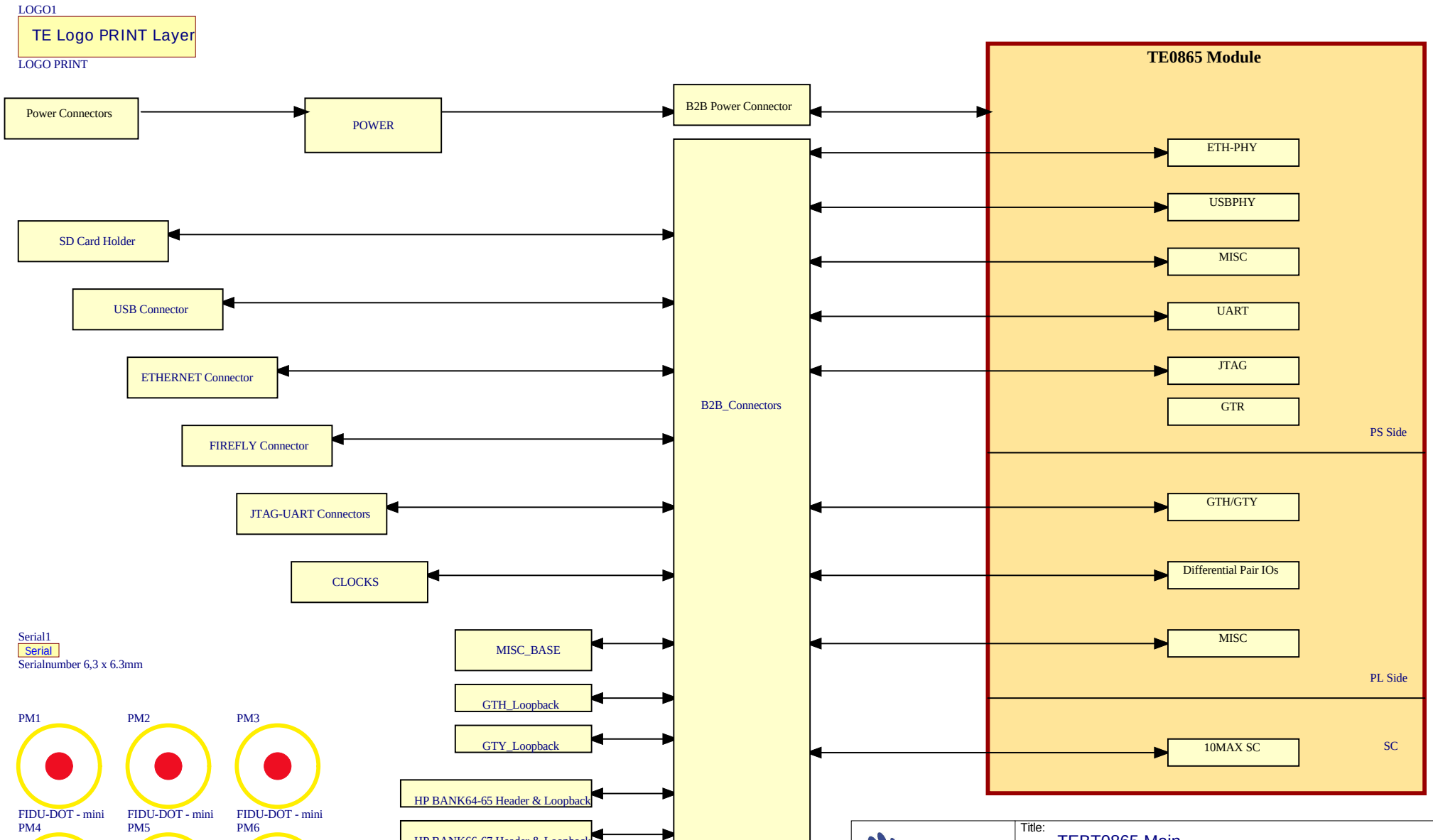

trenz electronic	Title: TEBT0865 Main		
A4	Number: 1 A		Rev. 01
Date: 27/10/2021	Copyright: Trenz Electronic GmbH		Page 1 of 29
	Filename: TEBT0865.schdoc		

J1

J2

J3

J4

Title: TEBT0865 – B2B_CONNECTORS			
A4	Number: 2 A		Rev. 01
Date: 27/10/2021	Copyright: Trenz Electronic GmbH		Page 2 of 29
Filename: B2B_Connectors.SchDoc			

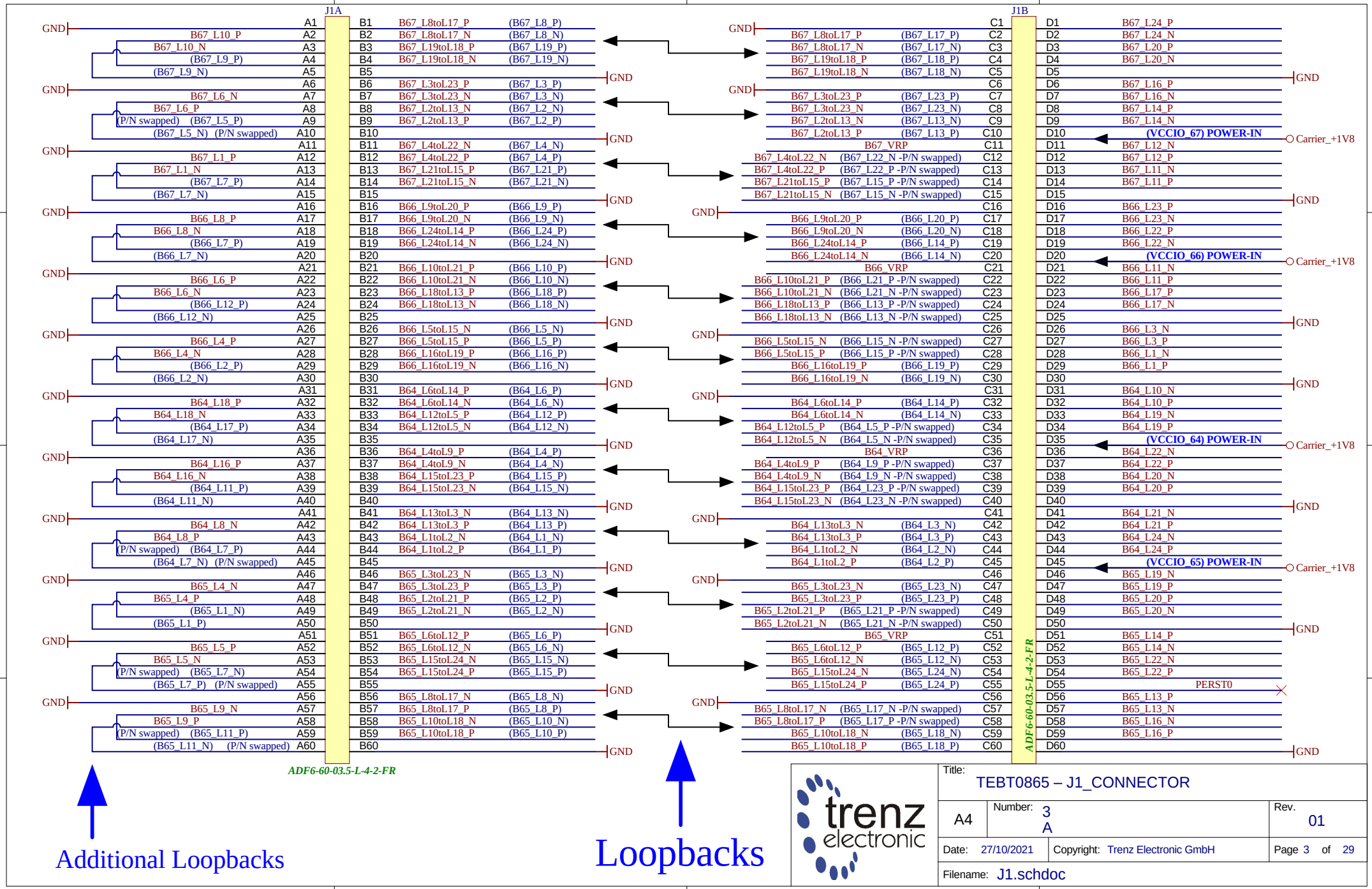
J1A
J1B
ADF6-60-03.5-L-4-2-FR
Carrier_+1V8
(VCCIO_67) POWER-IN
(VCCIO_66) POWER-IN
(VCCIO_64) POWER-IN
(VCCIO_65) POWER-IN
B67_VRP
B66_VRP
B64_VRP
B65_VRP
PERST0
Additional Loopbacks
Loopbacks
trenz electronic
Title: TEBT0865 – J1_CONNECTOR
A4
Number: 3 A
Rev. 01
Date: 27/10/2021
Copyright: Trenz Electronic GmbH
Page 3 of 29
Filename: J1.schdoc

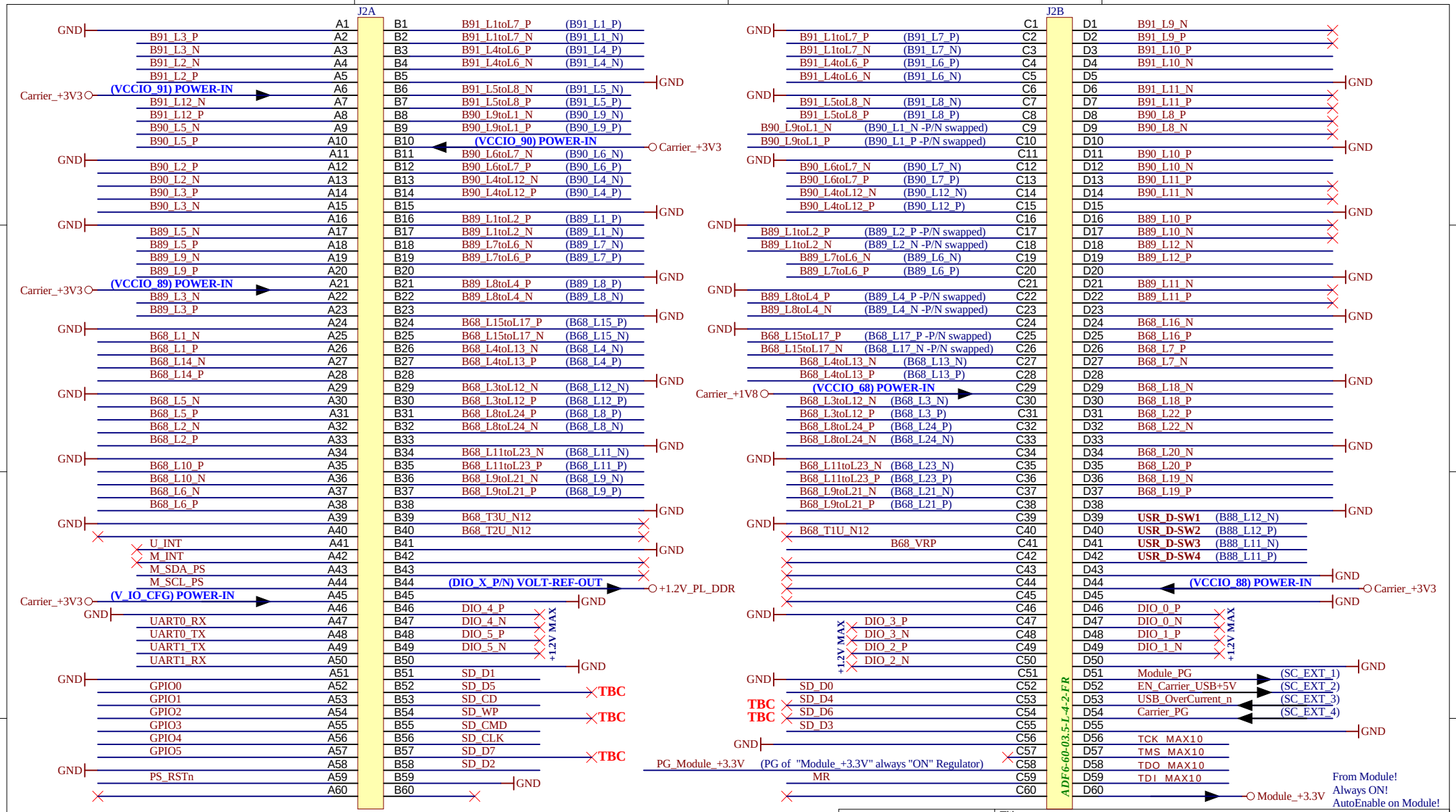

Title: TEBT0865 – J2_CONNECTOR

A4	Number: 4 A	Rev. 01
Date: 27/10/2021	Copyright: Trenz Electronic GmbH	Page 4 of 29
Filename: J2.schdoc		

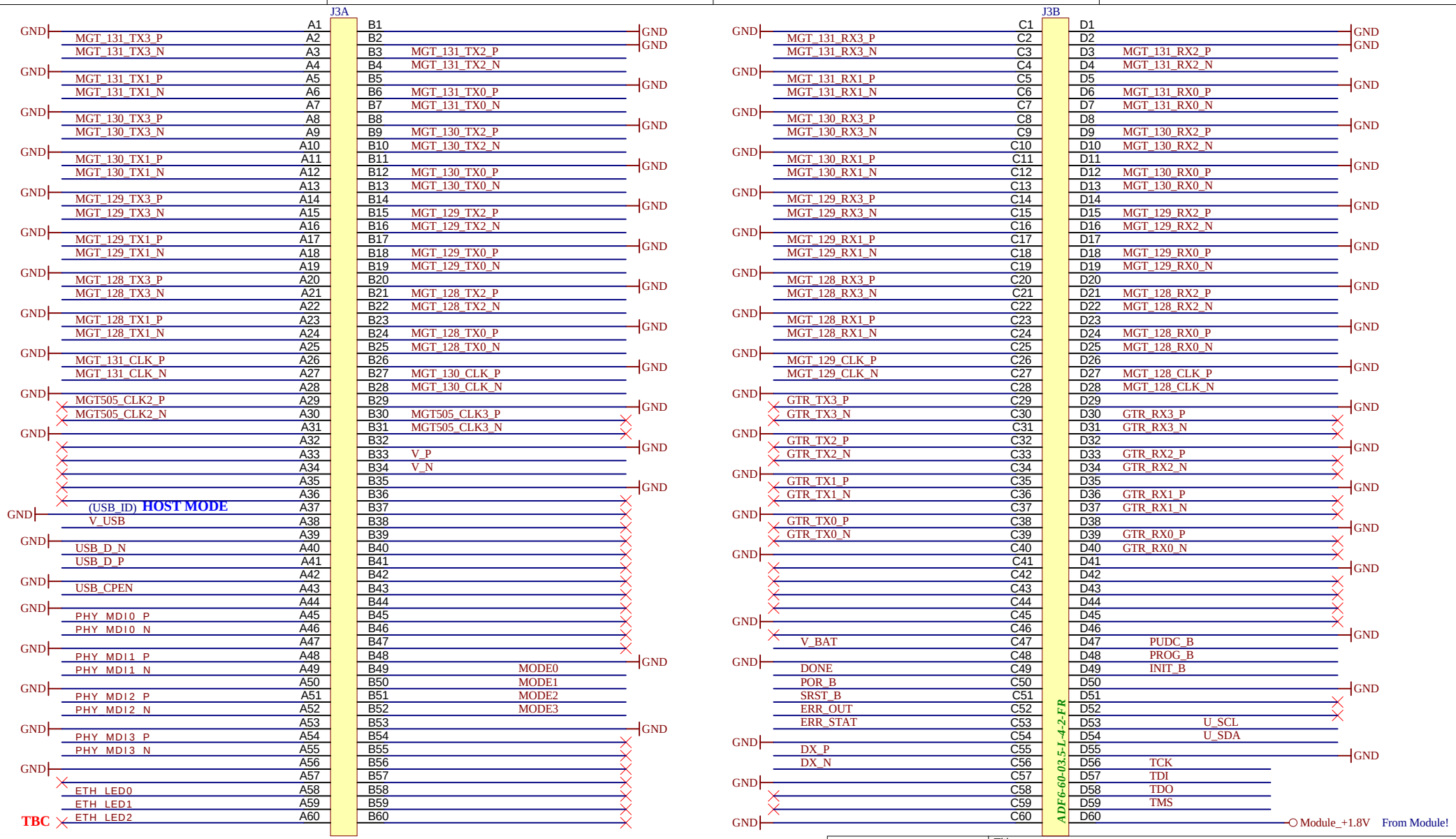

trenz electronic	Title: TEBT0865 – J3_CONNECTOR		
A4	Number: 5 A		Rev. 01
Date: 27/10/2021	Copyright: Trenz Electronic GmbH		Page 5 of 29
Filename: J3.schdoc			

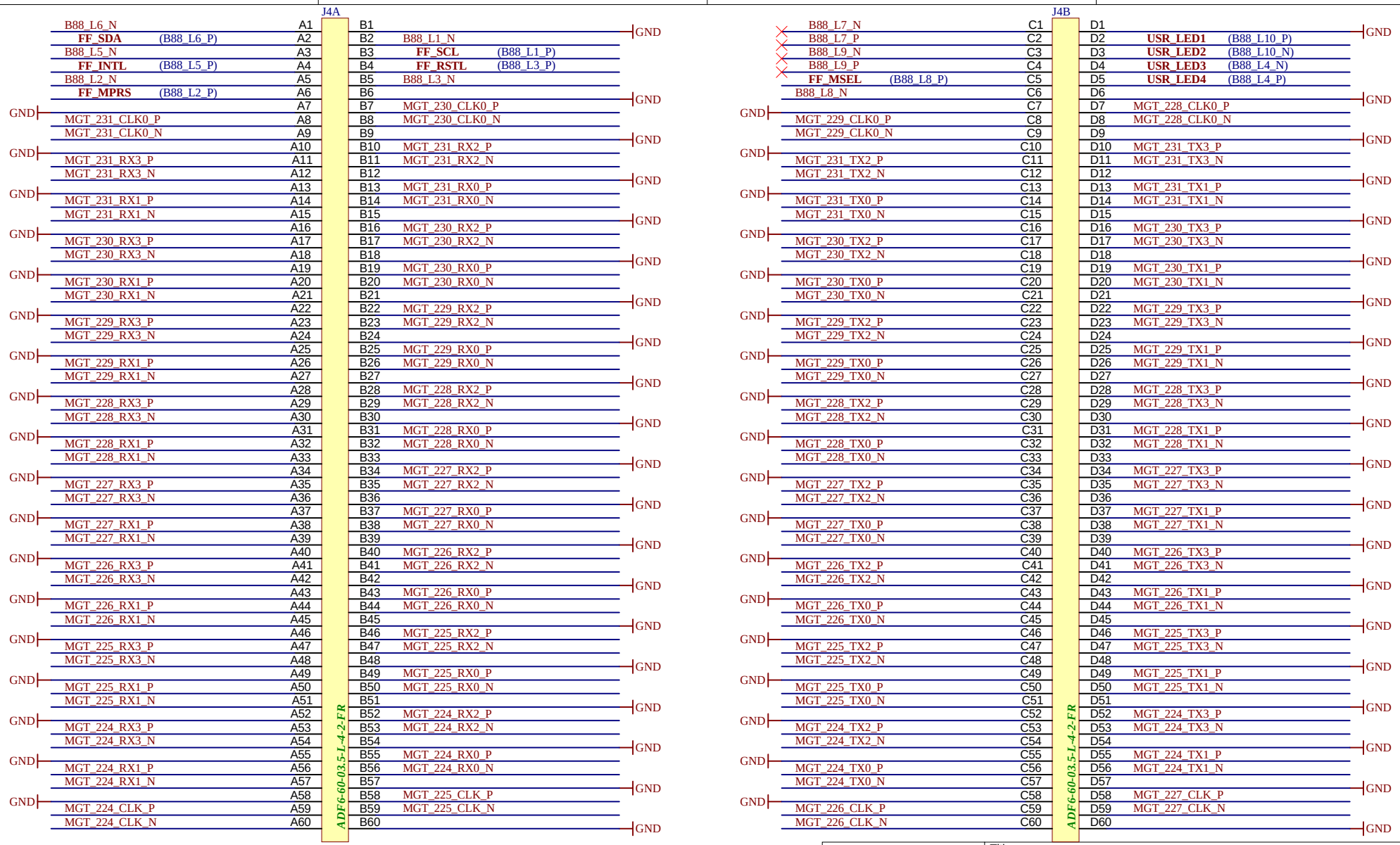

trenz electronic	Title: TEBT0865 – J4_CONNECTOR		
A4	Number: 6 A		Rev. 01
Date: 27/10/2021	Copyright: Trenz Electronic GmbH		Page 6 of 29
Filename: J4.schdoc			

MGT_224_RX1_P	C116	100nF	X5R	6.3V	MGT_224_TX0_P
MGT_224_RX1_N	C117	100nF	X5R	6.3V	MGT_224_TX0_N
MGT_224_RX0_P	C118	100nF	X5R	6.3V	MGT_224_TX1_P
MGT_224_RX0_N	C119	100nF	X5R	6.3V	MGT_224_TX1_N
MGT_224_RX3_P	C120	100nF	X5R	6.3V	MGT_224_TX2_P
MGT_224_RX3_N	C121	100nF	X5R	6.3V	MGT_224_TX2_N
MGT_224_RX2_P	C122	100nF	X5R	6.3V	MGT_224_TX3_P
MGT_224_RX2_N	C123	100nF	X5R	6.3V	MGT_224_TX3_N

MGT_225_RX1_P	C98	100nF	X5R	6.3V	MGT_225_TX0_P
MGT_225_RX1_N	C99	100nF	X5R	6.3V	MGT_225_TX0_N
MGT_225_RX0_P	C100	100nF	X5R	6.3V	MGT_225_TX1_P
MGT_225_RX0_N	C101	100nF	X5R	6.3V	MGT_225_TX1_N
MGT_225_RX3_P	C102	100nF	X5R	6.3V	MGT_225_TX2_P
MGT_225_RX3_N	C103	100nF	X5R	6.3V	MGT_225_TX2_N
MGT_225_RX2_P	C104	100nF	X5R	6.3V	MGT_225_TX3_P
MGT_225_RX2_N	C105	100nF	X5R	6.3V	MGT_225_TX3_N

MGT_226_RX1_P	C106	100nF	X5R	6.3V	MGT_226_TX0_P
MGT_226_RX1_N	C107	100nF	X5R	6.3V	MGT_226_TX0_N
MGT_226_RX0_P	C108	100nF	X5R	6.3V	MGT_226_TX1_P
MGT_226_RX0_N	C109	100nF	X5R	6.3V	MGT_226_TX1_N
MGT_226_RX3_P	C110	100nF	X5R	6.3V	MGT_226_TX2_P
MGT_226_RX3_N	C111	100nF	X5R	6.3V	MGT_226_TX2_N
MGT_226_RX2_P	C112	100nF	X5R	6.3V	MGT_226_TX3_P
MGT_226_RX2_N	C113	100nF	X5R	6.3V	MGT_226_TX3_N

MGT_227_RX1_P	C90	100nF	X5R	6.3V	MGT_227_TX0_P
MGT_227_RX1_N	C91	100nF	X5R	6.3V	MGT_227_TX0_N
MGT_227_RX0_P	C92	100nF	X5R	6.3V	MGT_227_TX1_P
MGT_227_RX0_N	C93	100nF	X5R	6.3V	MGT_227_TX1_N
MGT_227_RX3_P	C94	100nF	X5R	6.3V	MGT_227_TX2_P
MGT_227_RX3_N	C95	100nF	X5R	6.3V	MGT_227_TX2_N
MGT_227_RX2_P	C96	100nF	X5R	6.3V	MGT_227_TX3_P
MGT_227_RX2_N	C97	100nF	X5R	6.3V	MGT_227_TX3_N

MGT_228_RX1_P	C42	100nF	X5R	6.3V	MGT_228_TX0_P
MGT_228_RX1_N	C43	100nF	X5R	6.3V	MGT_228_TX0_N
MGT_228_RX0_P	C44	100nF	X5R	6.3V	MGT_228_TX1_P
MGT_228_RX0_N	C45	100nF	X5R	6.3V	MGT_228_TX1_N
MGT_228_RX3_P	C46	100nF	X5R	6.3V	MGT_228_TX2_P
MGT_228_RX3_N	C47	100nF	X5R	6.3V	MGT_228_TX2_N
MGT_228_RX2_P	C48	100nF	X5R	6.3V	MGT_228_TX3_P
MGT_228_RX2_N	C49	100nF	X5R	6.3V	MGT_228_TX3_N

MGT_229_RX1_P	C18	100nF	X5R	6.3V	MGT_229_TX0_P
MGT_229_RX1_N	C19	100nF	X5R	6.3V	MGT_229_TX0_N
MGT_229_RX0_P	C20	100nF	X5R	6.3V	MGT_229_TX1_P
MGT_229_RX0_N	C21	100nF	X5R	6.3V	MGT_229_TX1_N
MGT_229_RX3_P	C22	100nF	X5R	6.3V	MGT_229_TX2_P
MGT_229_RX3_N	C23	100nF	X5R	6.3V	MGT_229_TX2_N
MGT_229_RX2_P	C24	100nF	X5R	6.3V	MGT_229_TX3_P
MGT_229_RX2_N	C25	100nF	X5R	6.3V	MGT_229_TX3_N

MGT_230_RX1_P	C26	100nF	X5R	6.3V	MGT_230_TX0_P
MGT_230_RX1_N	C27	100nF	X5R	6.3V	MGT_230_TX0_N
MGT_230_RX0_P	C28	100nF	X5R	6.3V	MGT_230_TX1_P
MGT_230_RX0_N	C29	100nF	X5R	6.3V	MGT_230_TX1_N
MGT_230_RX3_P	C30	100nF	X5R	6.3V	MGT_230_TX2_P
MGT_230_RX3_N	C31	100nF	X5R	6.3V	MGT_230_TX2_N
MGT_230_RX2_P	C32	100nF	X5R	6.3V	MGT_230_TX3_P
MGT_230_RX2_N	C33	100nF	X5R	6.3V	MGT_230_TX3_N

MGT_231_RX1_P	C11	100nF	X5R	6.3V	MGT_231_TX0_P
MGT_231_RX1_N	C12	100nF	X5R	6.3V	MGT_231_TX0_N
MGT_231_RX0_P	C13	100nF	X5R	6.3V	MGT_231_TX1_P
MGT_231_RX0_N	C14	100nF	X5R	6.3V	MGT_231_TX1_N
MGT_231_RX3_P	C10	100nF	X5R	6.3V	MGT_231_TX2_P
MGT_231_RX3_N	C15	100nF	X5R	6.3V	MGT_231_TX2_N
MGT_231_RX2_P	C16	100nF	X5R	6.3V	MGT_231_TX3_P
MGT_231_RX2_N	C17	100nF	X5R	6.3V	MGT_231_TX3_N

GTH

Title: TEBT0865 – GTH_Loopback_Connections			
A4	Number: 7 A		Rev. 01
Date: 27/10/2021	Copyright: Trenz Electronic GmbH		Page 7 of 29
Filename: GTH_Loopback.schdoc			

GTY

MGT_129_RX0_P	C138	100nF	X5R	6.3V	MGT_129_TX0_P
MGT_129_RX0_N	C139	100nF	X5R	6.3V	MGT_129_TX0_N
MGT_129_RX1_P	C140	100nF	X5R	6.3V	MGT_129_TX1_P
MGT_129_RX1_N	C141	100nF	X5R	6.3V	MGT_129_TX1_N
MGT_129_RX2_P	C142	100nF	X5R	6.3V	MGT_129_TX2_P
MGT_129_RX2_N	C143	100nF	X5R	6.3V	MGT_129_TX2_N
MGT_129_RX3_P	C144	100nF	X5R	6.3V	MGT_129_TX3_P
MGT_129_RX3_N	C145	100nF	X5R	6.3V	MGT_129_TX3_N

MGT_128_RX0_P	C154	100nF	X5R	6.3V	MGT_128_TX0_P
MGT_128_RX0_N	C155	100nF	X5R	6.3V	MGT_128_TX0_N
MGT_128_RX1_P	C156	100nF	X5R	6.3V	MGT_128_TX1_P
MGT_128_RX1_N	C157	100nF	X5R	6.3V	MGT_128_TX1_N
MGT_128_RX2_P	C158	100nF	X5R	6.3V	MGT_128_TX2_P
MGT_128_RX2_N	C159	100nF	X5R	6.3V	MGT_128_TX2_N
MGT_128_RX3_P	C160	100nF	X5R	6.3V	MGT_128_TX3_P
MGT_128_RX3_N	C161	100nF	X5R	6.3V	MGT_128_TX3_N

MGT_130_RX0_P	C146	100nF	X5R	6.3V	MGT_130_TX0_P
MGT_130_RX0_N	C147	100nF	X5R	6.3V	MGT_130_TX0_N
MGT_130_RX1_P	C148	100nF	X5R	6.3V	MGT_130_TX1_P
MGT_130_RX1_N	C149	100nF	X5R	6.3V	MGT_130_TX1_N
MGT_130_RX2_P	C150	100nF	X5R	6.3V	MGT_130_TX2_P
MGT_130_RX2_N	C151	100nF	X5R	6.3V	MGT_130_TX2_N
MGT_130_RX3_P	C152	100nF	X5R	6.3V	MGT_130_TX3_P
MGT_130_RX3_N	C153	100nF	X5R	6.3V	MGT_130_TX3_N

trenz electronic

Title: TEBT0865 – GTY_Loopback_Connections

A4 | Number: 8 A | Rev. 01

Date: 27/10/2021 | Copyright: Trenz Electronic GmbH | Page 8 of 29

Filename: GTY_Loopback.schdoc

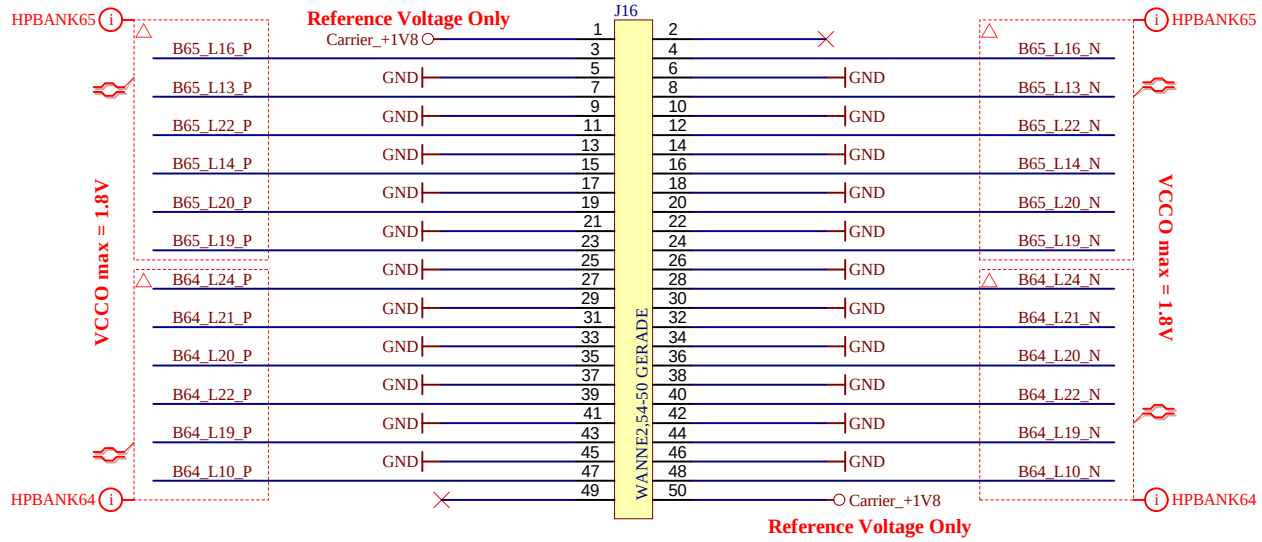

PCB Loopback connections

Routed as differential pairs

B64_L6_P	B64_L6toL14_P	B64_L14_P	
B64_L6_N)	B64_L6toL14_N	B64_L14_N	
B64_L12_P	B64_L12toL5_P	B64_L5_P	(P/N swapped)
B64_L12_N)	B64_L12toL5_N	B64_L5_N	(P/N swapped)
B64_L4_P	B64_L4toL9_P	B64_L9_P	(P/N swapped)
B64_L4_N)	B64_L4toL9_N	B64_L9_N	(P/N swapped)
B64_L15_P	B64_L15toL23_P	B64_L23_P	(P/N swapped)
B64_L15_N)	B64_L15toL23_N	B64_L23_N	(P/N swapped)
B64_L13_N)	B64_L13toL3_N	B64_L3_N	
B64_L13_P	B64_L13toL3_P	B64_L3_P	
B64_L1_N)	B64_L1toL2_N	B64_L2_N	
B64_L1_P	B64_L1toL2_P	B64_L2_P	

HPBANK64

Routed as differential pairs

HPBANK65

B65_L3_N	B65_L3toL23_N	B65_L23_N	
B65_L3_P	B65_L3toL23_P	B65_L23_P	
B65_L2_P	B65_L2toL21_P	B65_L21_P	(P/N swapped)
B65_L2_N	B65_L2toL21_N	B65_L21_N	(P/N swapped)
B65_L6_P	B65_L6toL12_P	B65_L12_P	
B65_L6_N	B65_L6toL12_N	B65_L12_N	
B65_L15_N	B65_L15toL24_N	B65_L24_N	
B65_L15_P	B65_L15toL24_P	B65_L24_P	
B65_L8_N	B65_L8toL17_N	B65_L17_N	(P/N swapped)
B65_L8_P	B65_L8toL17_P	B65_L17_P	(P/N swapped)
B65_L10_N	B65_L10toL18_N	B65_L18_N	
B65_L10_P	B65_L10toL18_P	B65_L18_P	

Routed as single-ended

(B64_L17_P)	B64_L18_P	
(B64_L17_N)	B64_L18_N	
(B64_L11_P)	B64_L16_P	
(B64_L11_N)	B64_L16_N	
(B64_L7_P)	B64_L8_N	(P/N swapped)
(B64_L7_N)	B64_L8_P	(P/N swapped)

HPBANK64

HPBANK65

(B65_L1_N)	B65_L4_N	
(B65_L1_P)	B65_L4_P	
(B65_L7_N)	B65_L5_P	(P/N swapped)
(B65_L7_P)	B65_L5_N	(P/N swapped)
(B65_L11_P)	B65_L9_N	(P/N swapped)
(B65_L11_N)	B65_L9_P	(P/N swapped)

trenz electronic

Title: TEBT0865 – Bank64 and Bank65 Header and Loopbacks			
A4	Number: 9 A		Rev. 01
Date: 27/10/2021	Copyright: Trenz Electronic GmbH		Page 9 of 29
Filename: BANK64-65_Header.SchDoc			

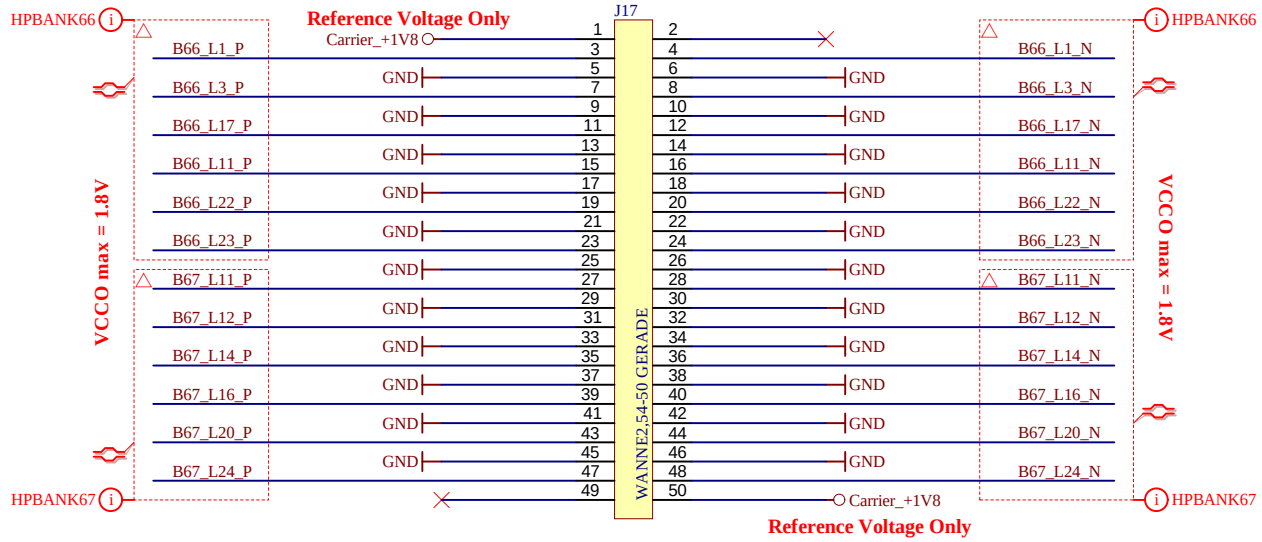

PCB Loopback connections

Routed as differential pairs

B66_L9_P	B66_L9toL20_P	B66_L20_P	
B66_L9_N	B66_L9toL20_N	B66_L20_N	
B66_L24_P	B66_L24toL14_P	B66_L14_P	
B66_L24_N	B66_L24toL14_N	B66_L14_N	
B66_L10_P	B66_L10toL21_P	B66_L21_P	(P/N swapped)
B66_L10_N	B66_L10toL21_N	B66_L21_N	(P/N swapped)
B66_L18_P	B66_L18toL13_P	B66_L13_P	(P/N swapped)
B66_L18_N	B66_L18toL13_N	B66_L13_N	(P/N swapped)
B66_L5_N	B66_L5toL15_N	B66_L15_N	(P/N swapped)
B66_L5_P	B66_L5toL15_P	B66_L15_P	(P/N swapped)
B66_L16_P	B66_L16toL19_P	B66_L19_P	
B66_L16_N	B66_L16toL19_N	B66_L19_N	

HPBANK66

Routed as differential pairs

HPBANK67

B67_L8_P	B67_L8toL17_P	B67_L17_P	
B67_L8_N	B67_L8toL17_N	B67_L17_N	
B67_L19_P	B67_L19toL18_P	B67_L18_P	
B67_L19_N	B67_L19toL18_N	B67_L18_N	
B67_L3_P	B67_L3toL23_P	B67_L23_P	
B67_L3_N	B67_L3toL23_N	B67_L23_N	
B67_L2_N	B67_L2toL13_N	B67_L13_N	
B67_L2_P	B67_L2toL13_P	B67_L13_P	
B67_L4_N	B67_L4toL22_N	B67_L22_N	(P/N swapped)
B67_L4_P	B67_L4toL22_P	B67_L22_P	(P/N swapped)
B67_L21_P	B67_L21toL15_P	B67_L15_P	(P/N swapped)
B67_L21_N	B67_L21toL15_N	B67_L15_N	(P/N swapped)

Routed as single-ended

(B66_L7_P)	B66_L8_P
(B66_L7_N)	B66_L8_N
(B66_L12_P)	B66_L6_P
(B66_L12_N)	B66_L6_N
(B66_L2_P)	B66_L4_P
(B66_L2_N)	B66_L4_N

HPBANK66

HPBANK67

(B67_L9_P)	B67_L10_P	
(B67_L9_N)	B67_L10_N	
(B67_L5_P)	B67_L6_N	(P/N swapped)
(B67_L5_N)	B67_L6_P	(P/N swapped)
(B67_L7_P)	B67_L1_P	
(B67_L7_N)	B67_L1_N	

Title: TEBT0865 – Bank66 and Bank67 Header and Loopbacks			
A4	Number: 10 A		Rev. 01
Date: 27/10/2021	Copyright: Trenz Electronic GmbH		Page 10 of 29
Filename: BANK66-67_Header.SchDoc			

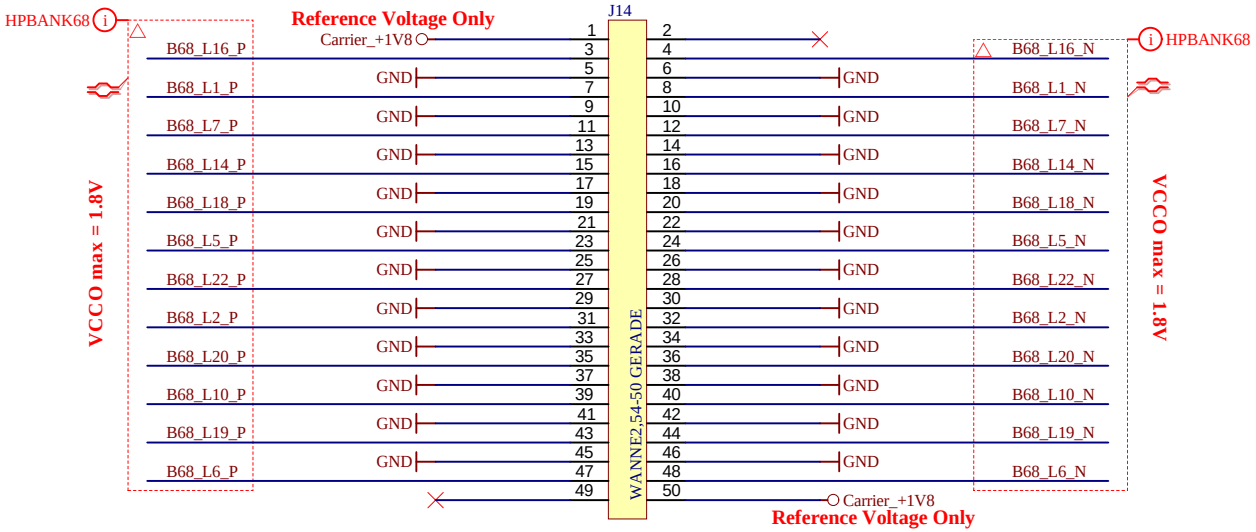

PCB Loopback connections

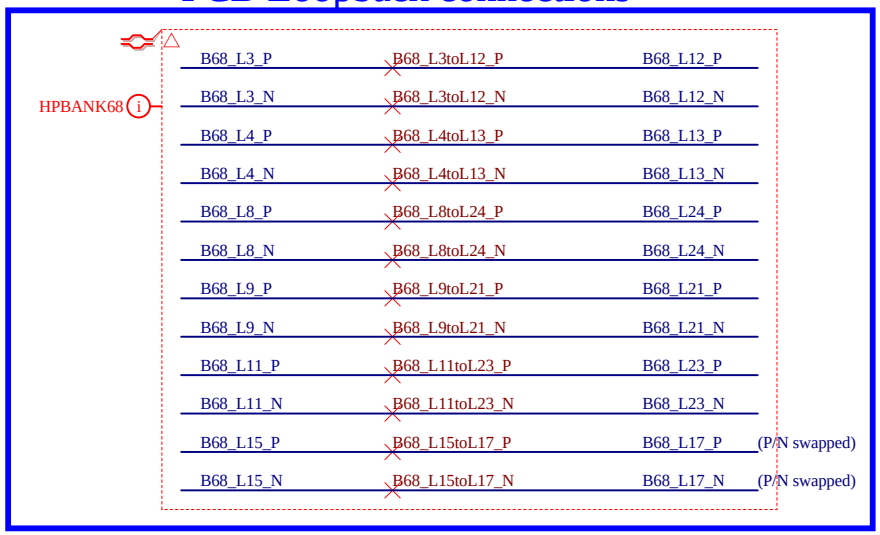

trenz electronic	Title: TEBT0865 – BANK68 Header and Loopbacks		
A4	Number: 11 A		Rev. 01
Date: 27/10/2021	Copyright: Trenz Electronic GmbH		Page 11 of 29
Filename: BANK68_Header.SchDoc			

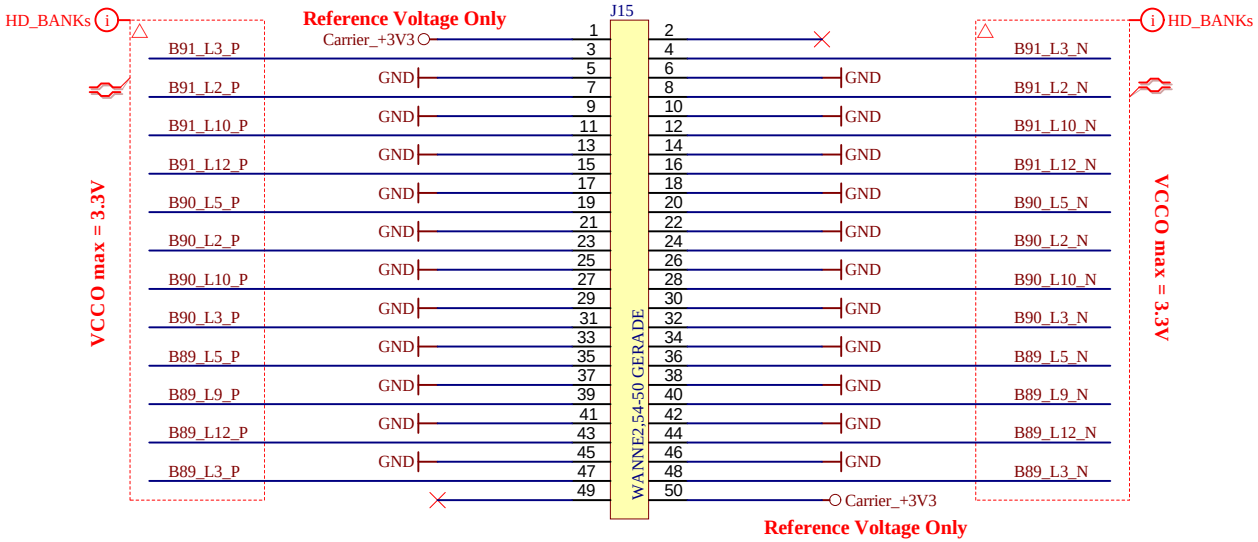

PCB Loopback connections

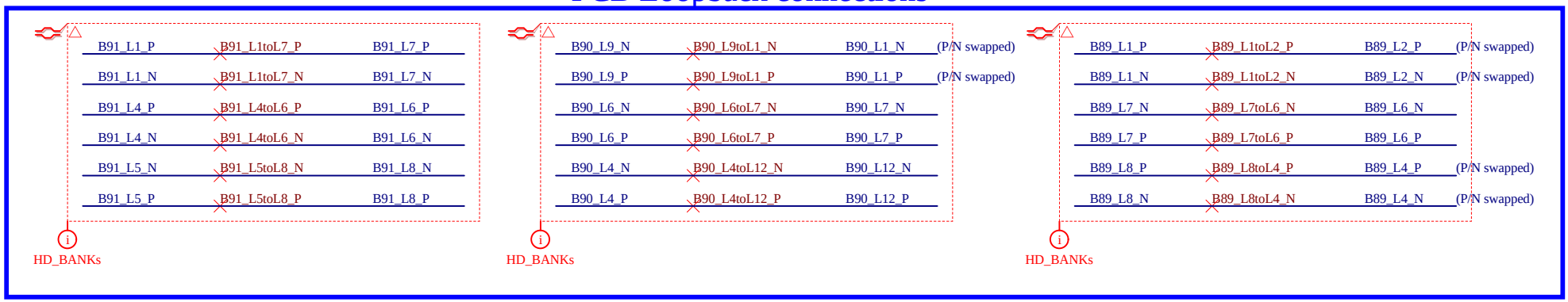

trenz electronic	Title: TEBT0865 – HD BANKS Header and Loopback		
A4	Number: 12 A		Rev. 01
Date: 27/10/2021	Copyright: Trenz Electronic GmbH		Page 12 of 29
Filename: HD_BANKS_Header.SchDoc			

GTH CLOCKs

CLOCKs_1

GTH CLOCKs

CLOCKs_2

GTY CLOCKs

CLOCKs_3

trenz electronic	Title: TEBT0865 – CLOCKs		
A4	Number: 13 A		Rev. 01
Date: 27/10/2021	Copyright: Trenz Electronic GmbH		Page 13 of 29
Filename: CLOCKs.schdoc			

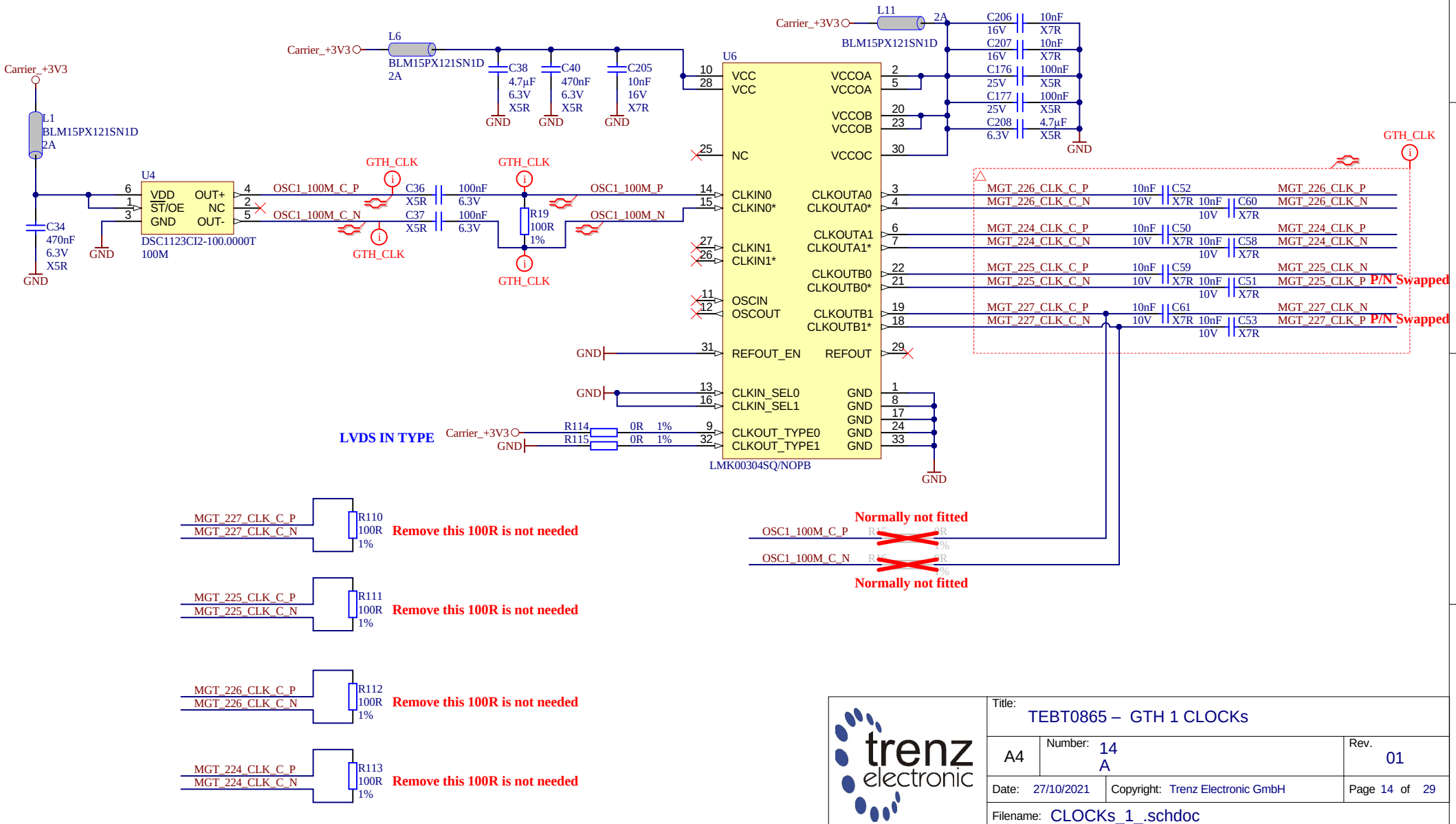

trenz electronic	Title: TEBT0865 – GTH 1 CLOCKs		
A4	Number: 14 A		Rev. 01
Date: 27/10/2021	Copyright: Trenz Electronic GmbH		Page 14 of 29
Filename: CLOCKs_1_.schdoc			

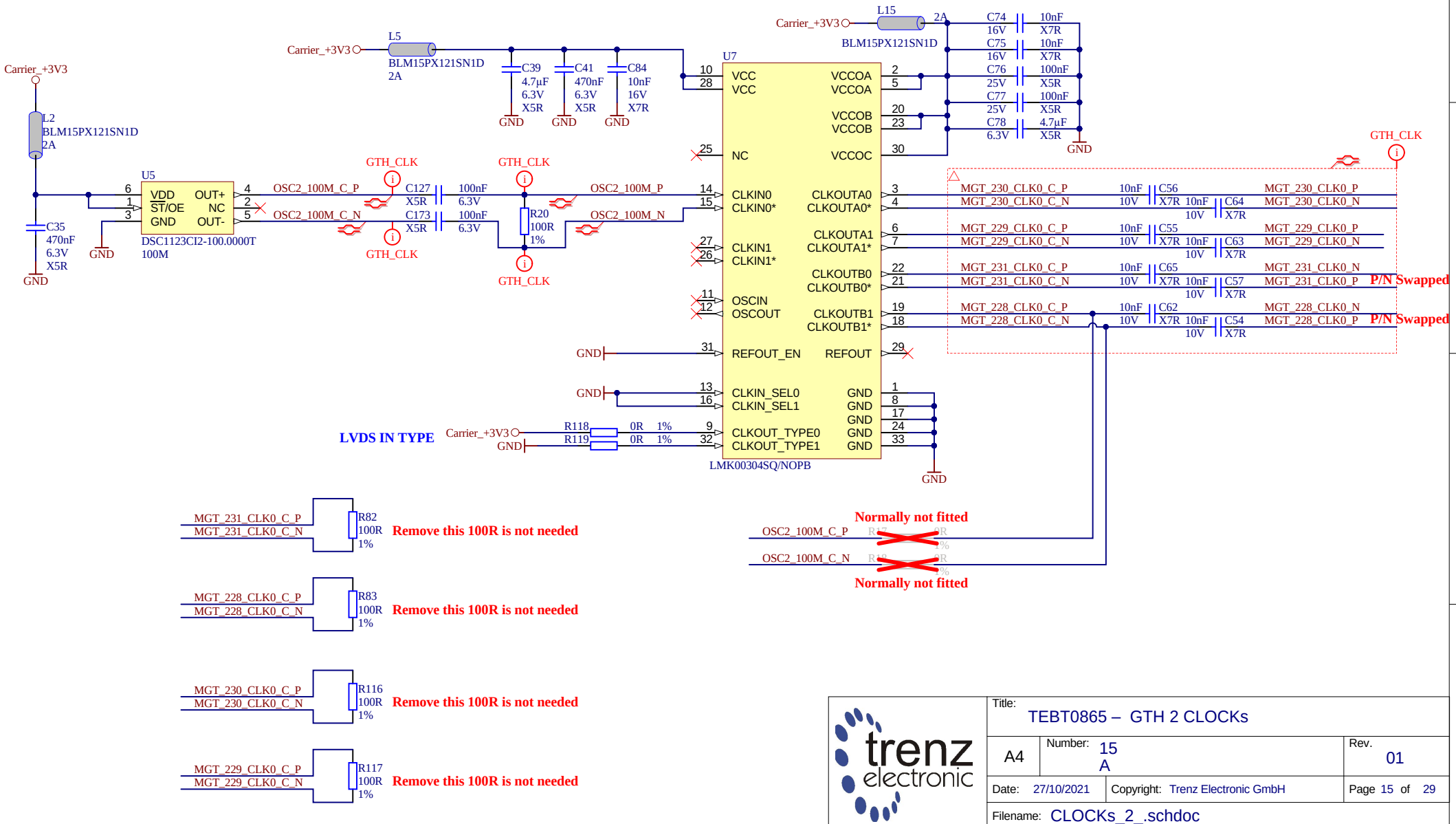

trenz electronic	Title: TEBT0865 – GTH 2 CLOCKs		
A4	Number: 15 A		Rev. 01
Date: 27/10/2021	Copyright: Trenz Electronic GmbH		Page 15 of 29
Filename: CLOCKs_2_.schdoc			

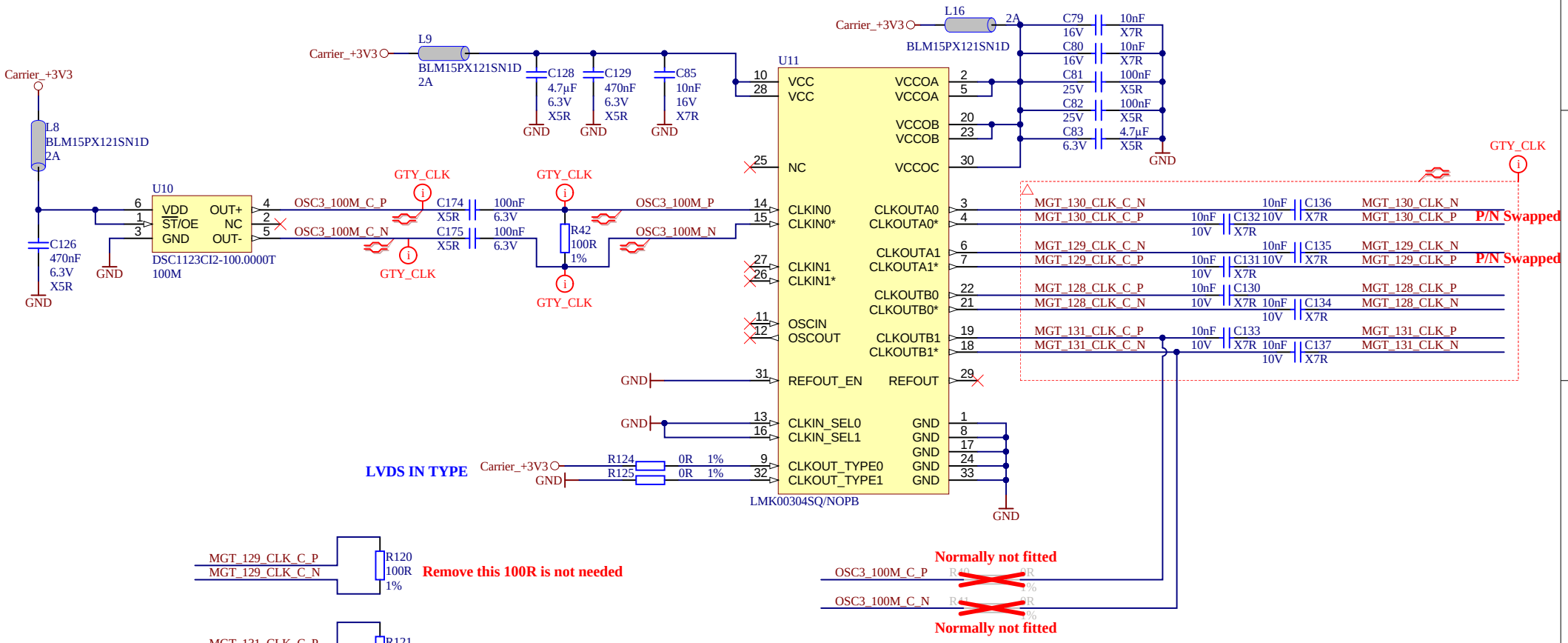

Title: TEBT0865 – GTY CLOCKs			
A4	Number: 16 A		Rev. 01
Date: 27/10/2021	Copyright: Trenz Electronic GmbH		Page 16 of 29
Filename: CLOCKs_3_.schdoc			

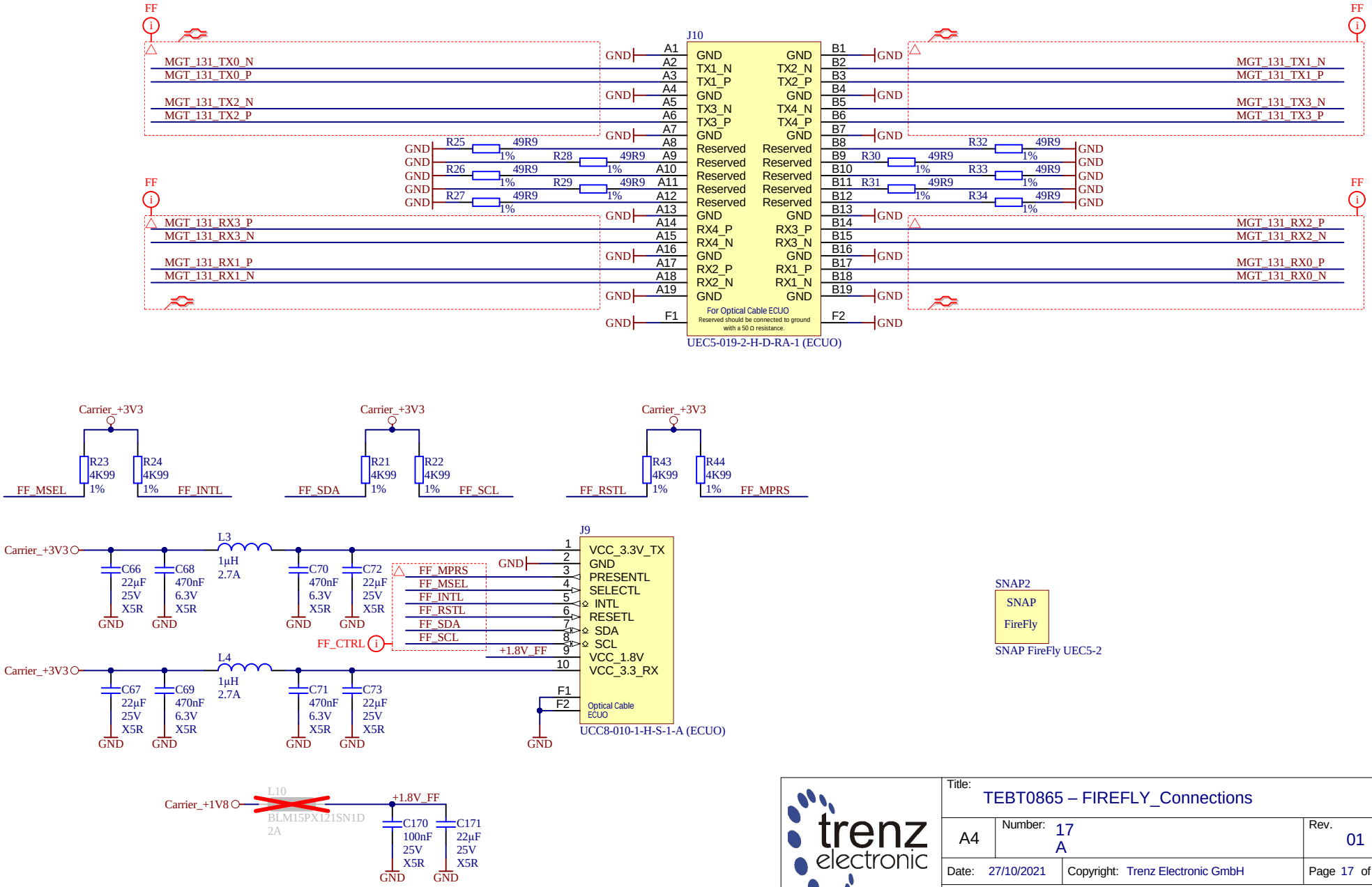

trenz electronic	Title: TEBT0865 – FIREFLY_Connections		
A4	Number: 17 A		Rev. 01
Date: 27/10/2021	Copyright: Trenz Electronic GmbH		Page 17 of 29
Filename: FIREFLY.SchDoc			

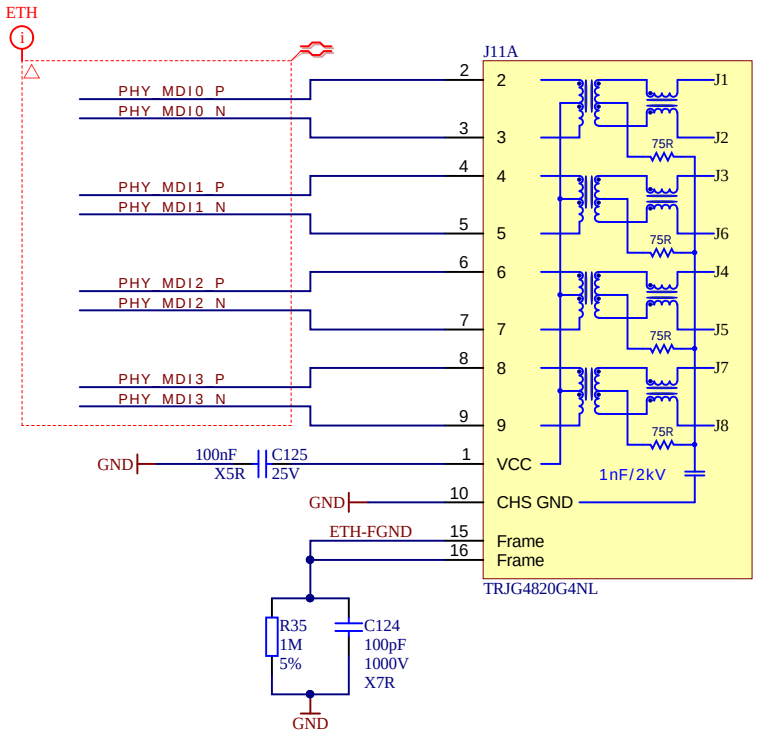

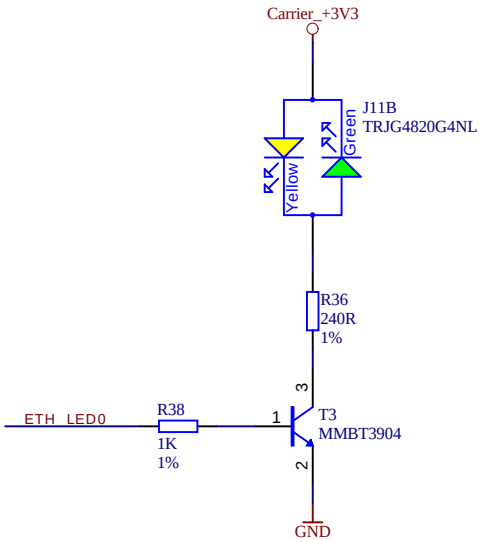

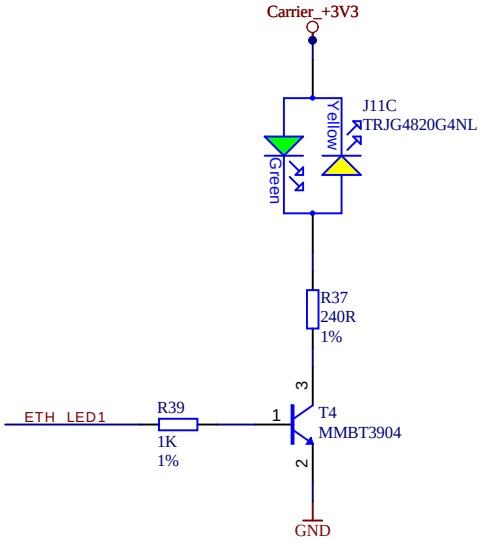

trenz electronic	Title: TEBT0865 – ETHERNET		
A4	Number: 18 A		Rev. 01
Date: 27/10/2021	Copyright: Trenz Electronic GmbH		Page 18 of 29
Filename: ETHERNET.SchDoc			

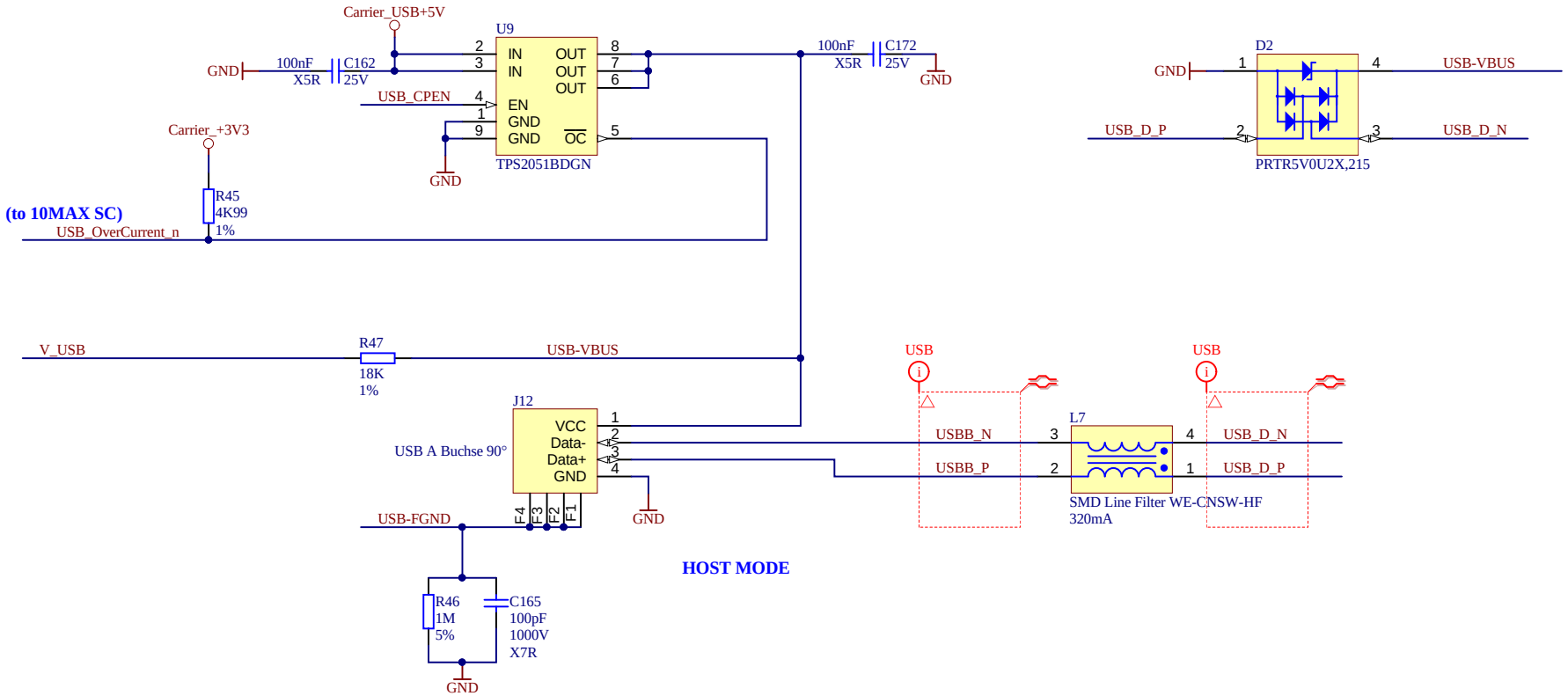

trenz electronic	Title: TEBT0865 – USB		
A4	Number: 19 A		Rev. 01
Date: 27/10/2021	Copyright: Trenz Electronic GmbH		Page 19 of 29
	Filename: USB.SchDoc		

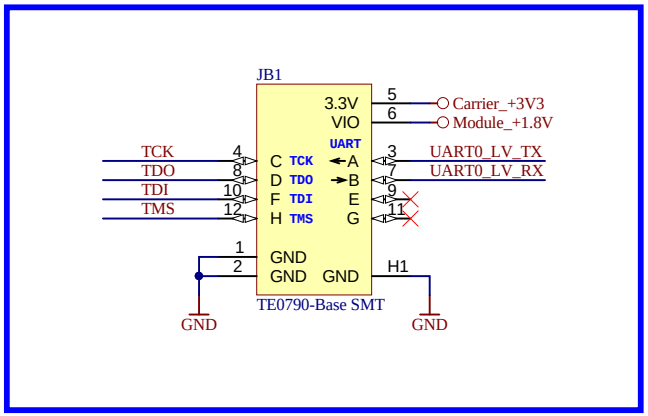

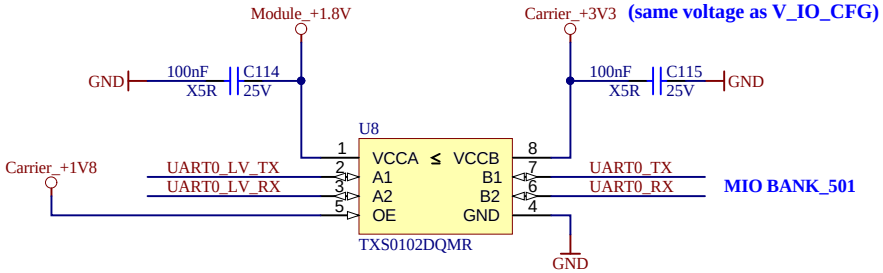

TE0790 XMOD JTAG PROGRAMMER/UART0 HEADER

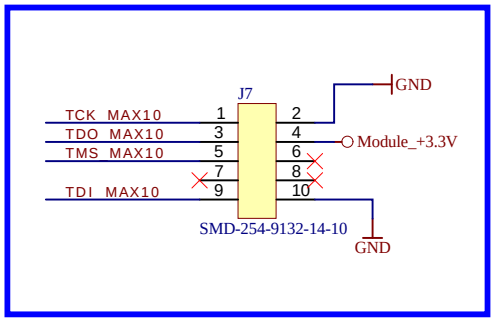

10MAX SC TEI0004 JTAG PROGRAMMER HEADER

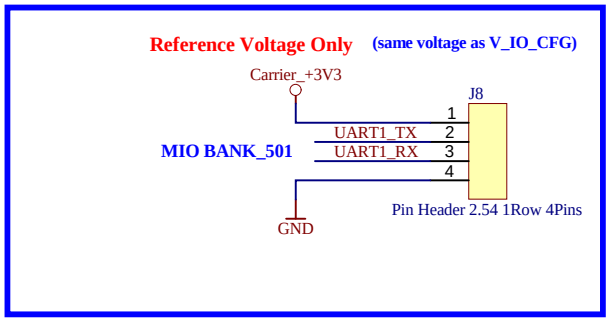

UART1 HEADER ONLY

trenz electronic	Title: TEBT0865 – JTAG_UART_Connections		
A4	Number: 20 A		Rev. 01
Date: 27/10/2021	Copyright: Trenz Electronic GmbH		Page 20 of 29
Filename: JTAG_UART_Connections.SchDoc			

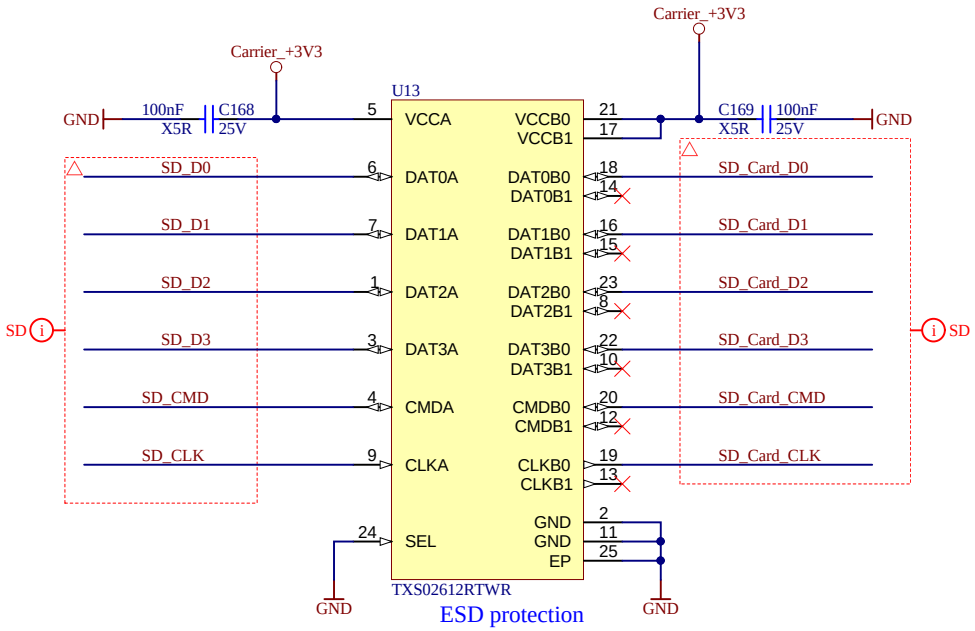

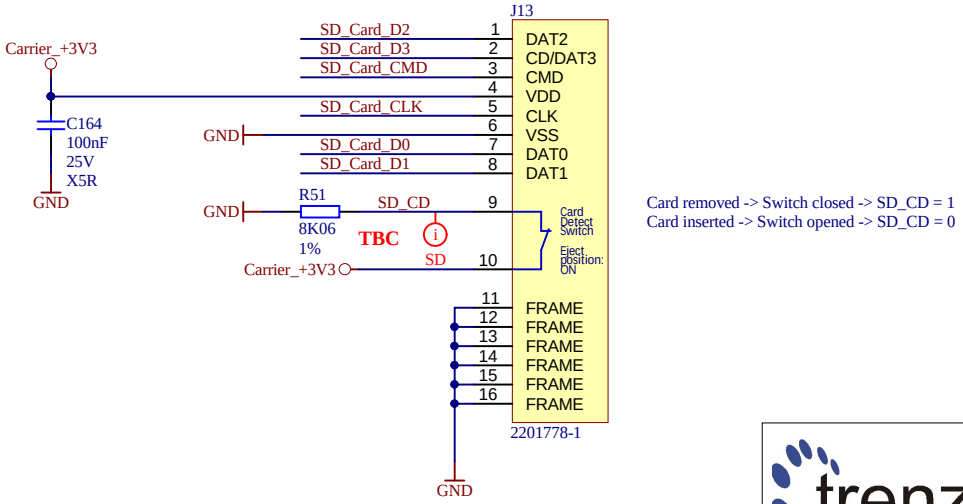

trenz electronic	Title: TEBT0865 – SD Card		
A4	Number: 21 A		Rev. 01
Date: 27/10/2021	Copyright: Trenz Electronic GmbH		Page 21 of 29
	Filename: SD_Card.SchDoc		

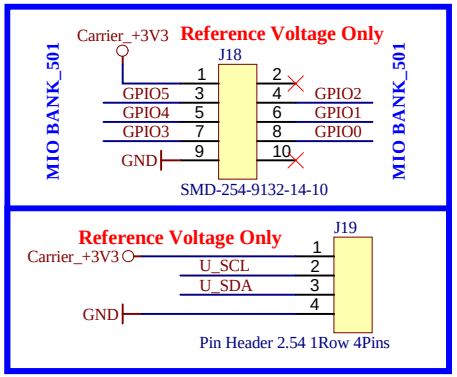

ADDITIONAL HEADERS

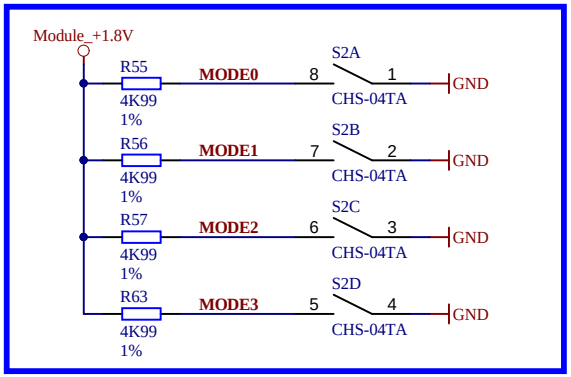

MODE SELECTION

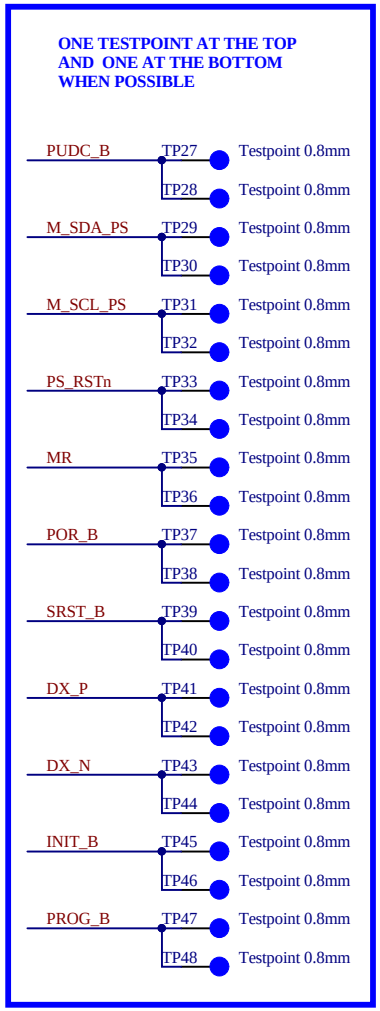

TESTPOINTS

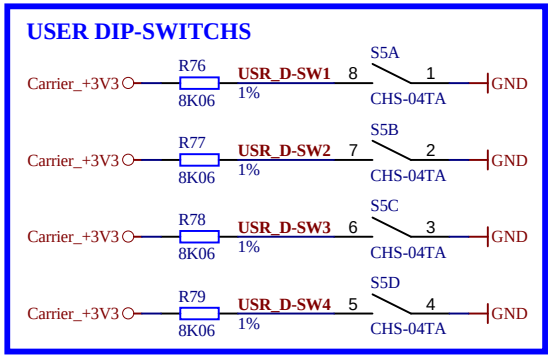

DIP-SWITCHS

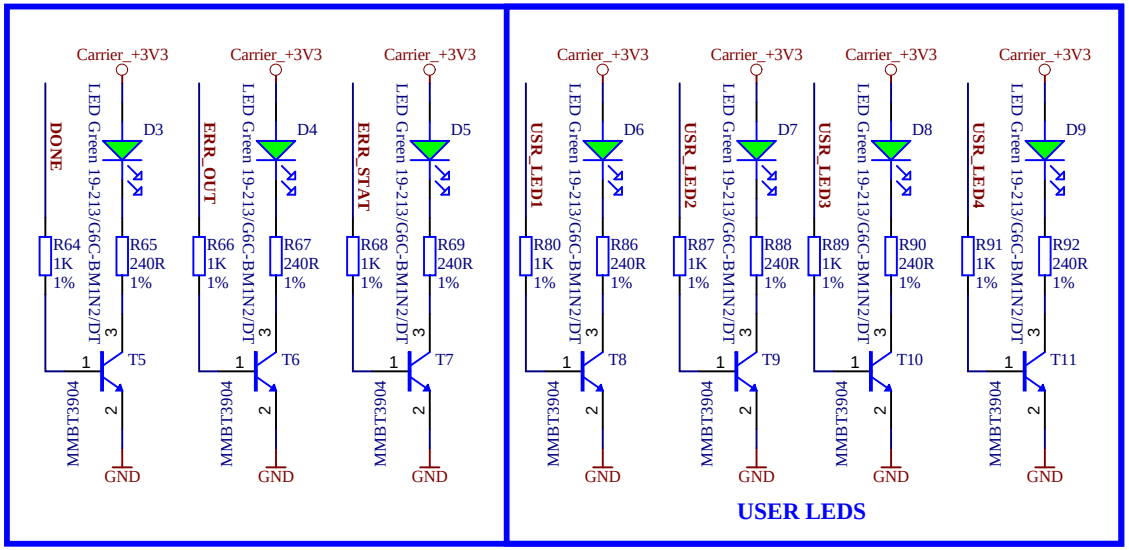

LEDS

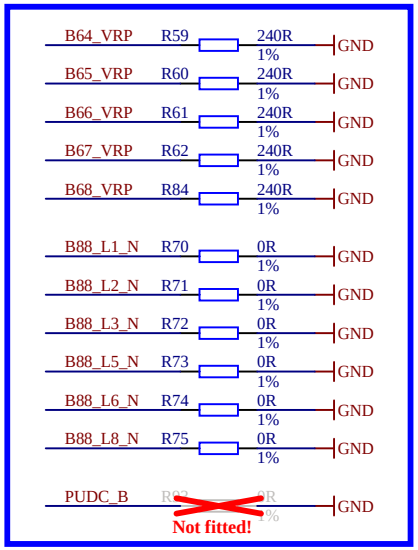

TERMINATIONS

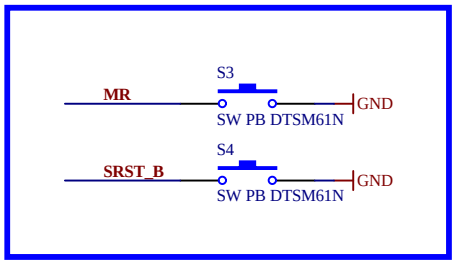

PUSH BUTTONS

Title: TEBT0865 – MISC_BASE			
A4	Number: 22 A		Rev. 01
Date: 27/10/2021	Copyright: Trenz Electronic GmbH		Page 22 of 29
Filename: MISC_BASE.SchDoc			

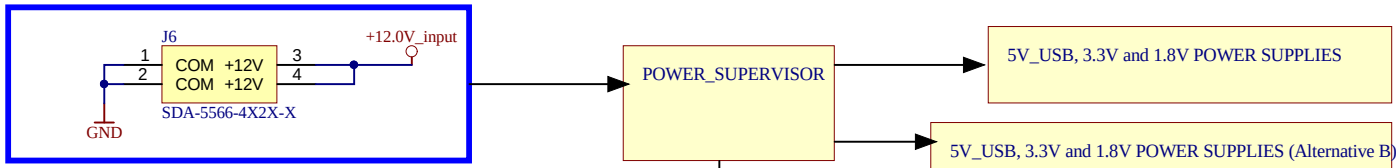

MAIN POWER-IN CONNECTOR

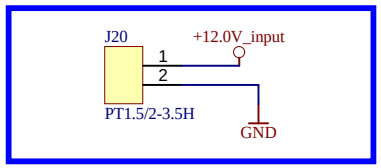

OPTIONAL MAIN POWER-IN CONNECTOR

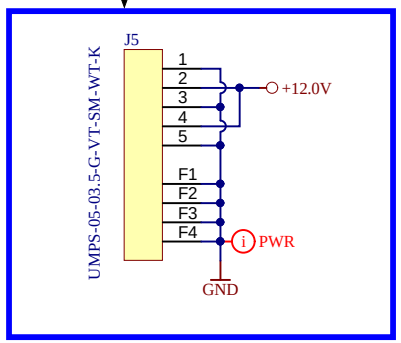

B2B POWER CONNECTOR

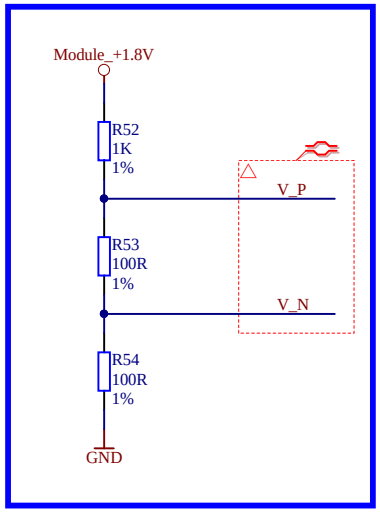

FPGA ADC 1.8V Module Monitoring

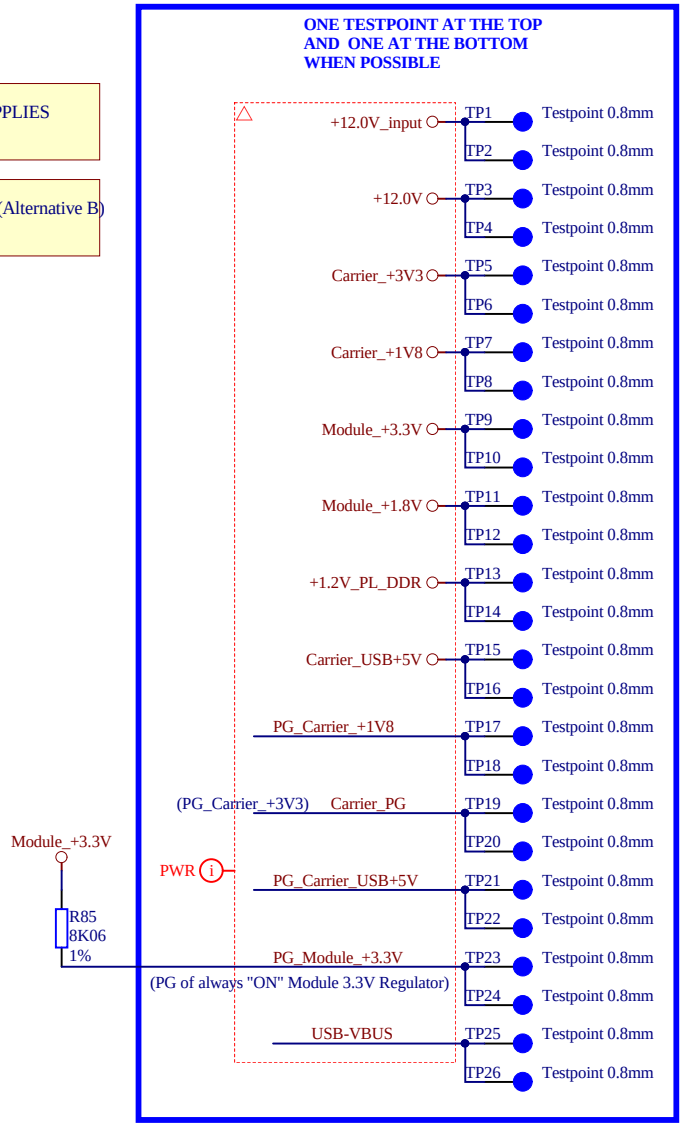

TESTPOINTS

trenz electronic	Title: TEBT0865 – POWER		
A4	Number: 23 A		Rev. 01
Date: 27/10/2021	Copyright: Trenz Electronic GmbH		Page 23 of 29
	Filename: POWER.SchDoc		

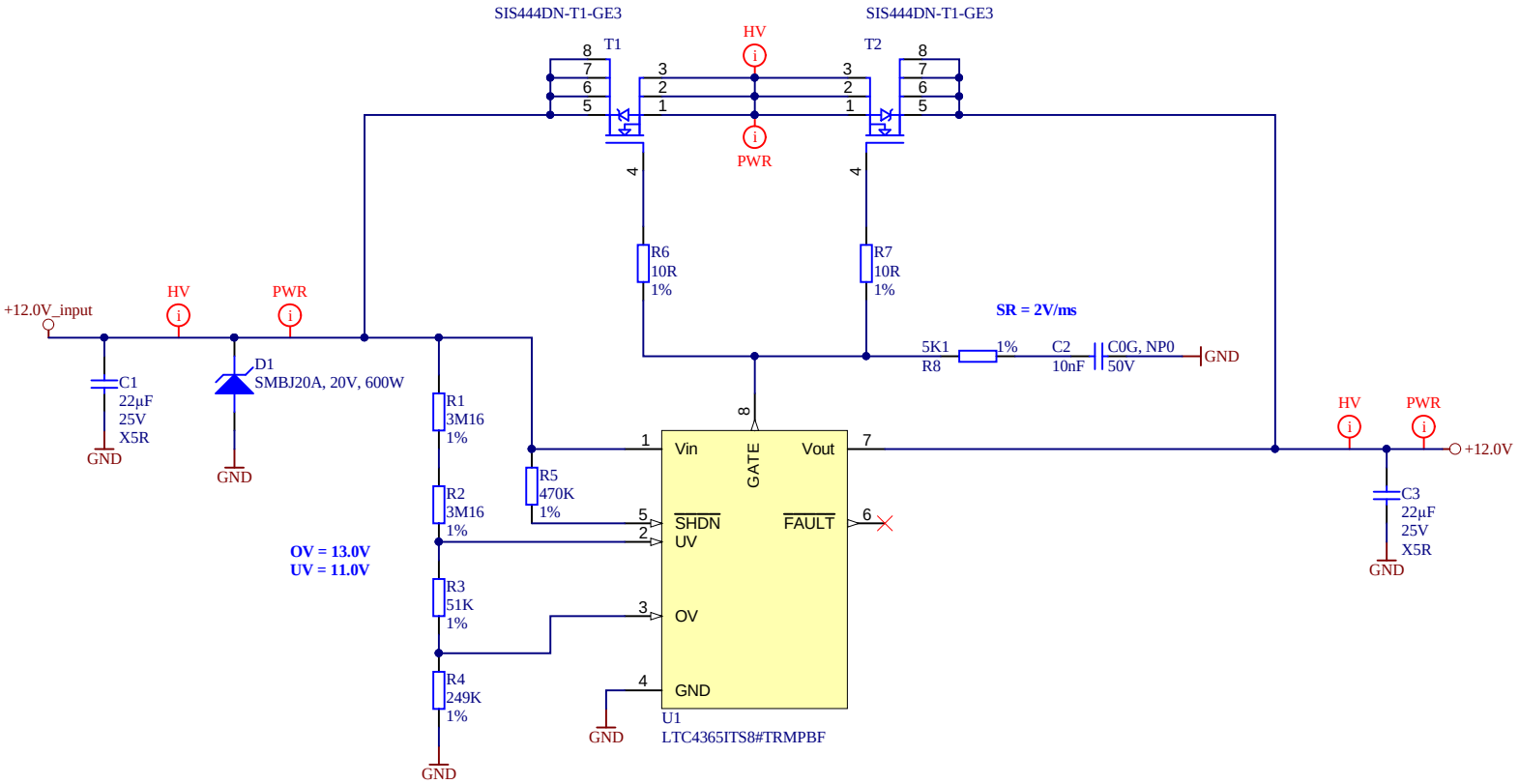

trenz electronic	Title: TEBT0865 – POWER SUPERVISOR		
A4	Number: 24 A		Rev. 01
Date: 27/10/2021	Copyright: Trenz Electronic GmbH		Page 24 of 29
Filename: POWER_1.SchDoc			

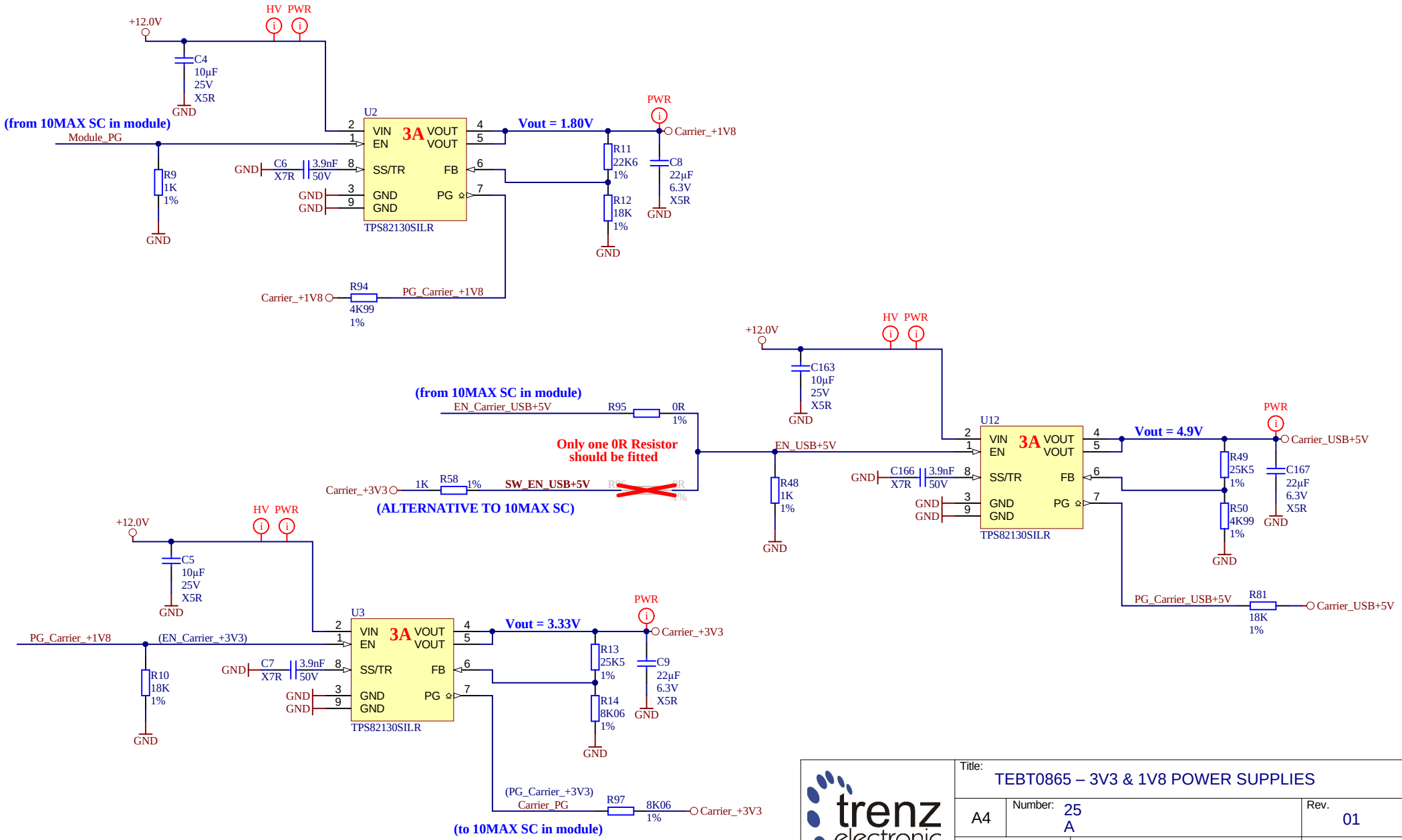

trenz electronic	Title: TEBT0865 – 3V3 & 1V8 POWER SUPPLIES	
A4	Number: 25 A	Rev. 01
Date: 27/10/2021	Copyright: Trenz Electronic GmbH	Page 25 of 29
	Filename: POWER_2.SchDoc	

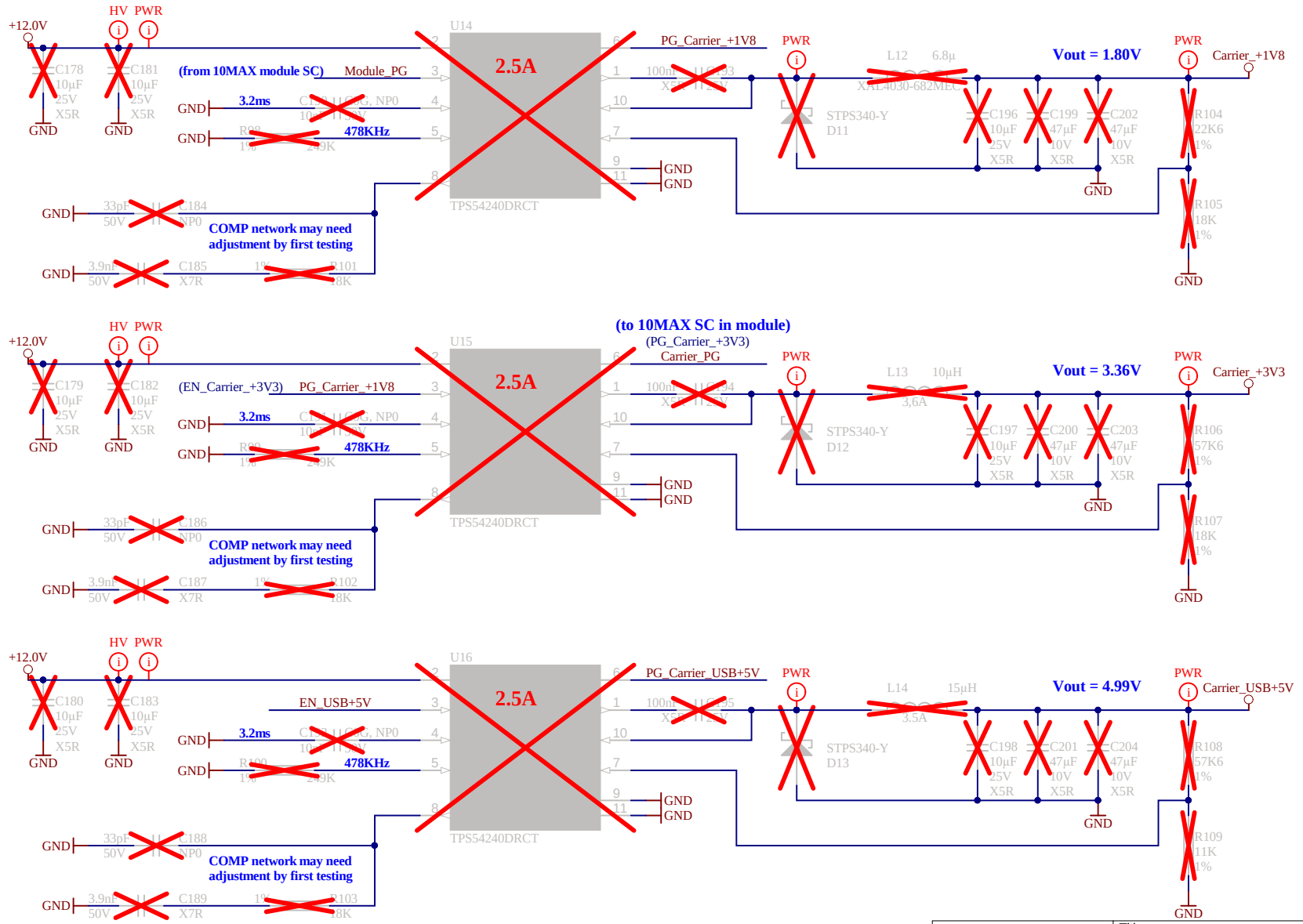

trenz electronic	Title: TEBT0865 – POWER SUPPLIES for Alternative Variant B		
A4	Number: 26 A		Rev. 01
Date: 27/10/2021	Copyright: Trenz Electronic GmbH		Page 26 of 29
Filename: POWER_3.SchDoc			

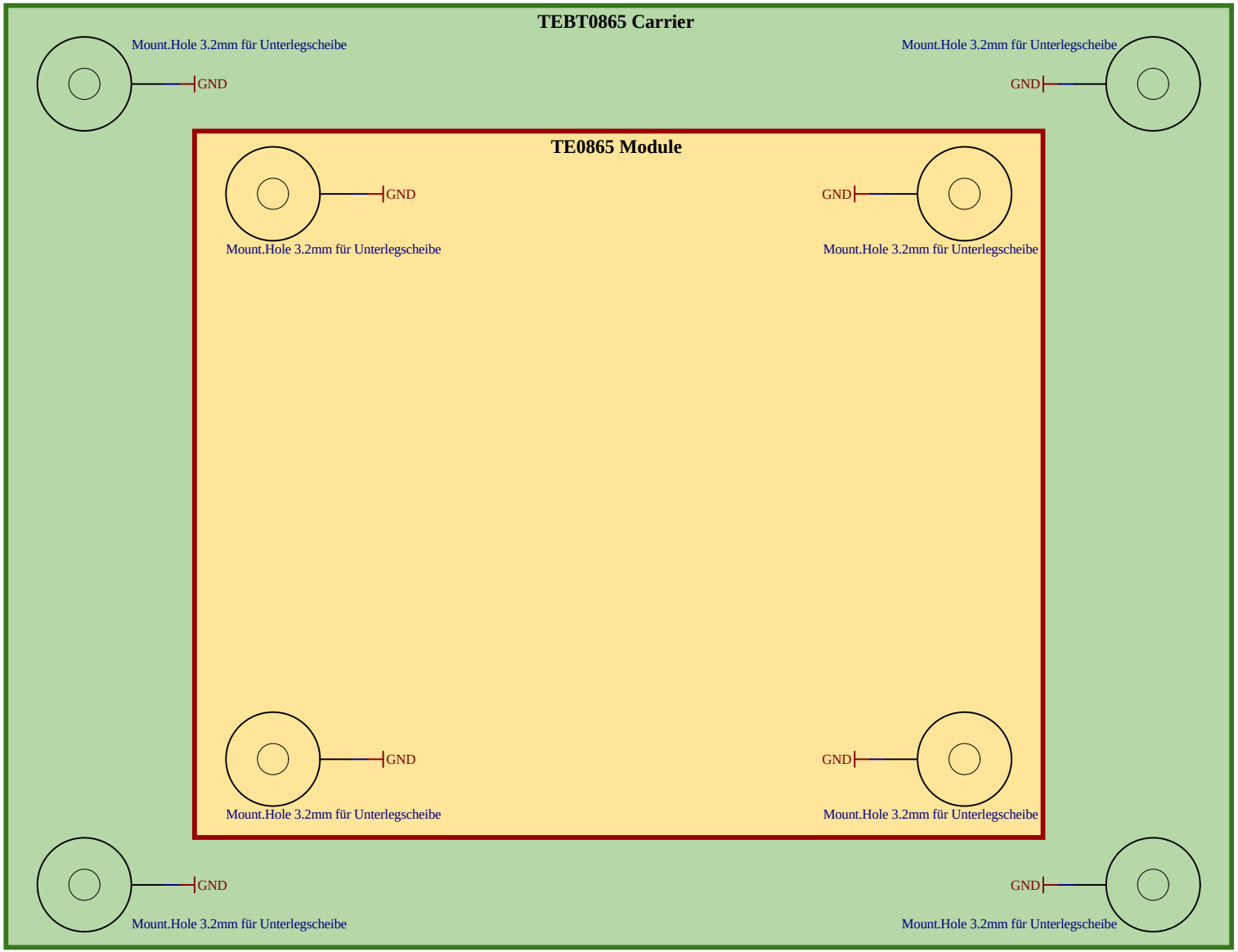

SNAP1

SNAP for TE0865 (100x75 mm)

trenz electronic	Title: TEBT0865 MECH		
A4	Number: 27 A		Rev. 01
Date: 27/10/2021	Copyright: Trenz Electronic GmbH		Page 27 of 29
Filename: MECH.schdoc			

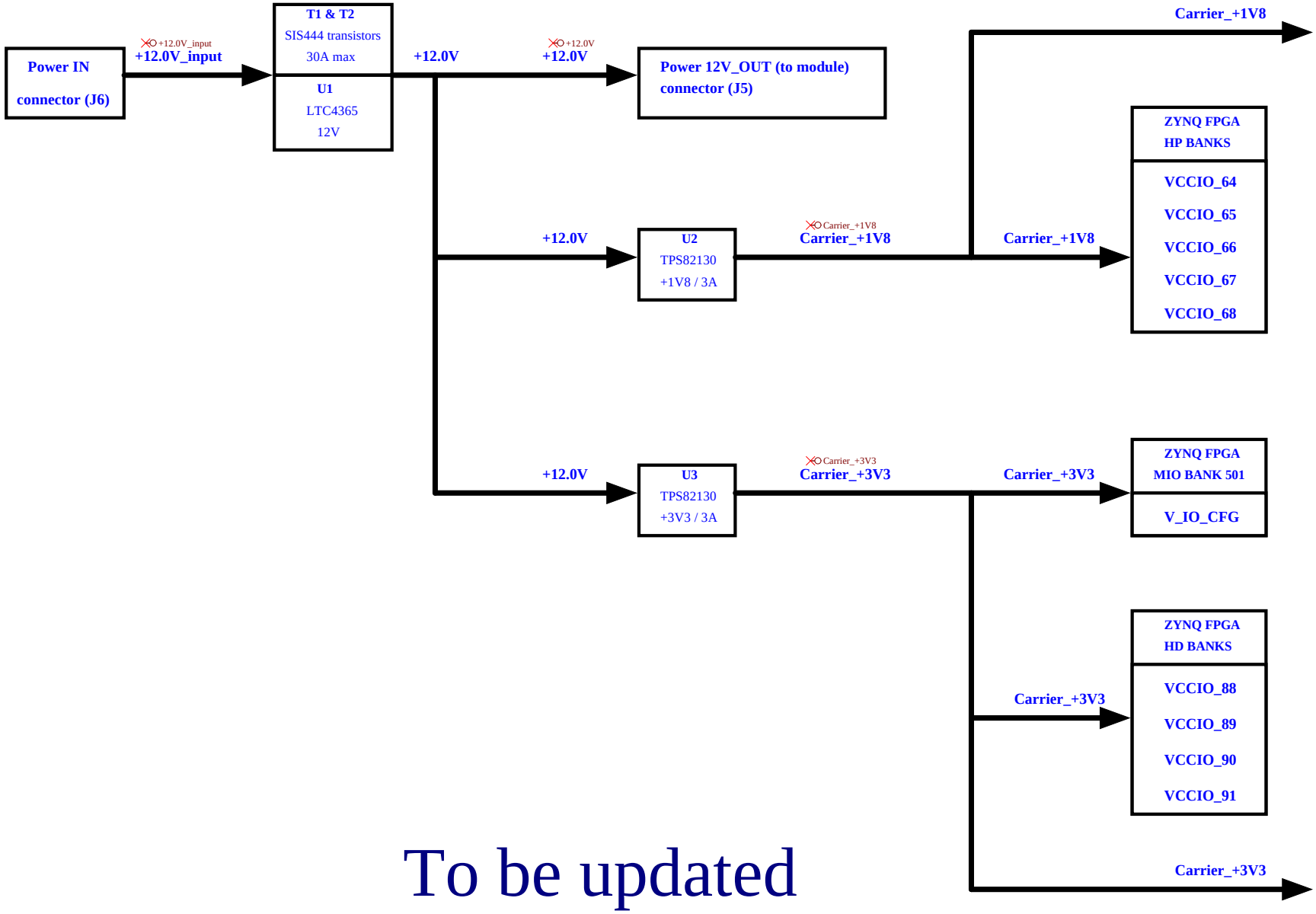

To be updated

trenz electronic	Title: TEBT0865 – PowerOverview		
A4	Number: 28 A		Rev. 01
Date: 27/10/2021	Copyright: Trenz Electronic GmbH		Page 28 of 29
Filename: PowerOverview.SchDoc			

REV	Description	
-01	Initial revision	GHC

Title: TEBT0865 – Revision_Changes		
A4	Number: 29 A	Rev. 01
Date: 27/10/2021	Copyright: Trenz Electronic GmbH	Page 29 of 29
Filename: Revision_Changes.SchDoc		