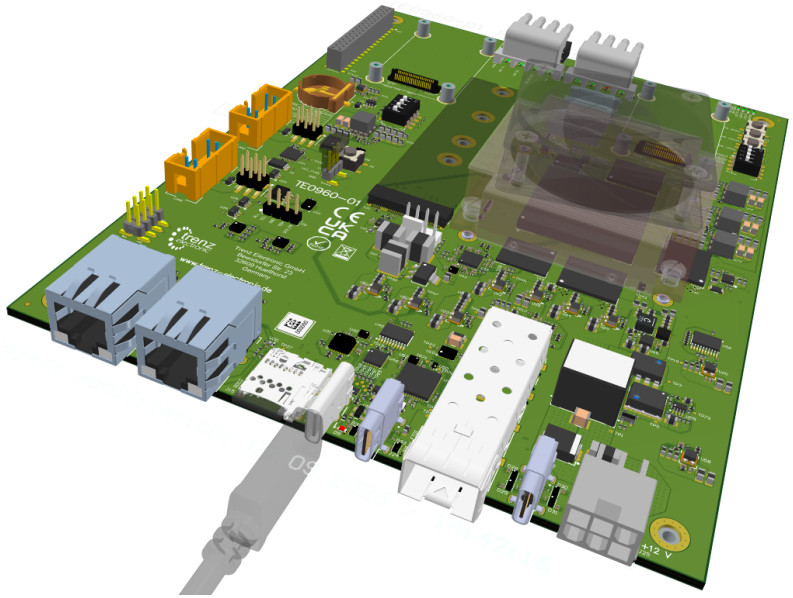

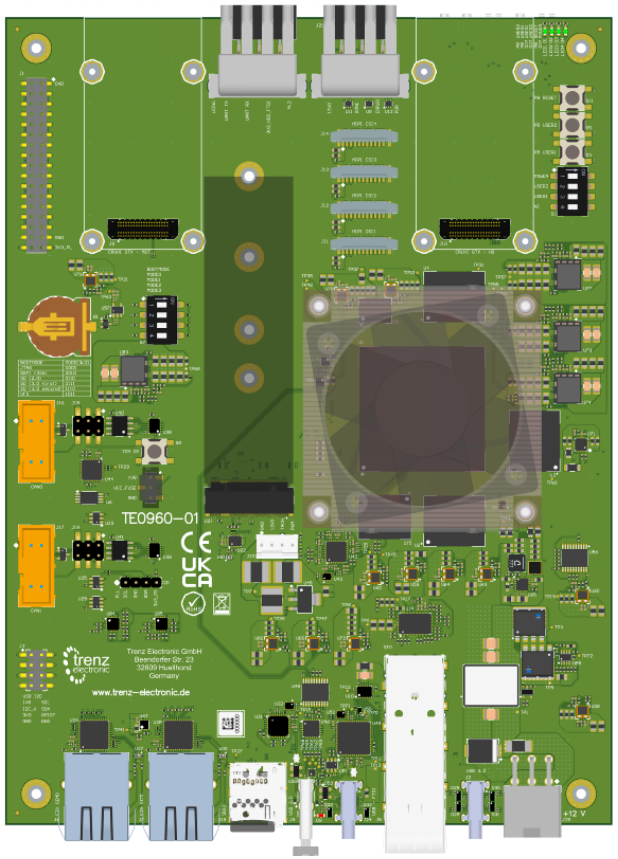

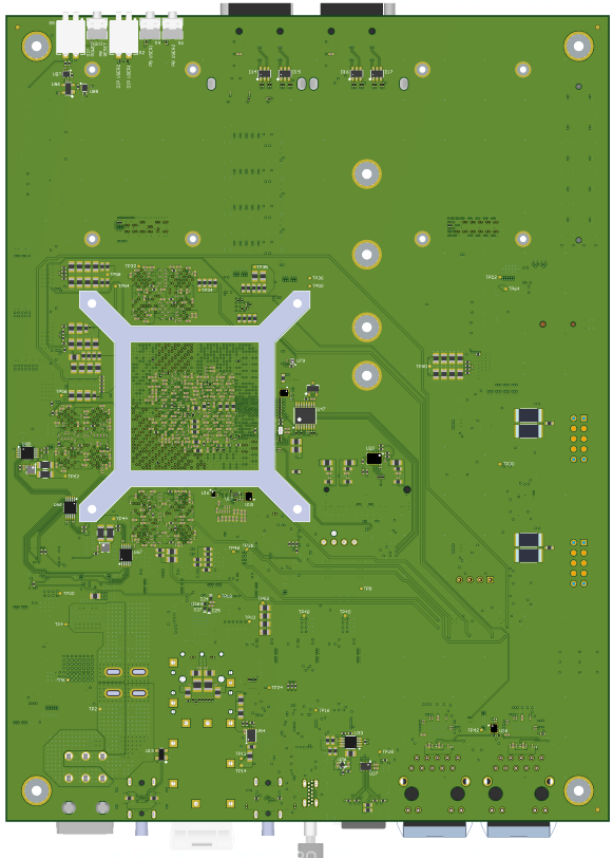

Regarding the usage of our schematics and alike documentation for Trenz module TE0960.

Project is protected under copyright and we strongly and strictly prohibit the reverse engineering or recreation, even if the design is just adapted or modified.

TE0960 is protected under such right and in case of plagiarism we will have to do anything necessary in order to protect our assets.

Schematics and other handouts serve for informational purposes only!

trenz electronic	Title: TE0960 – Legal Notices		
	A4	Number: TE0960 GCME74A	Rev. 01
	Date: 18.09.2026	Copyright: Trenz Electronic GmbH	Page 1 of 55
	Filename: Legal Notices Modules.SchDoc		

REV	DATE	Description	
-01	2026-09	Initial revision	ED

trenz electronic

Title: TE0960 – Revision Changes		
A4	Number: TE0960 GCME74A	Rev. 01
Date: 18.09.2026	Copyright: Trenz Electronic GmbH	Page 2 of 55
Filename: Revision_Changes.SchDoc		

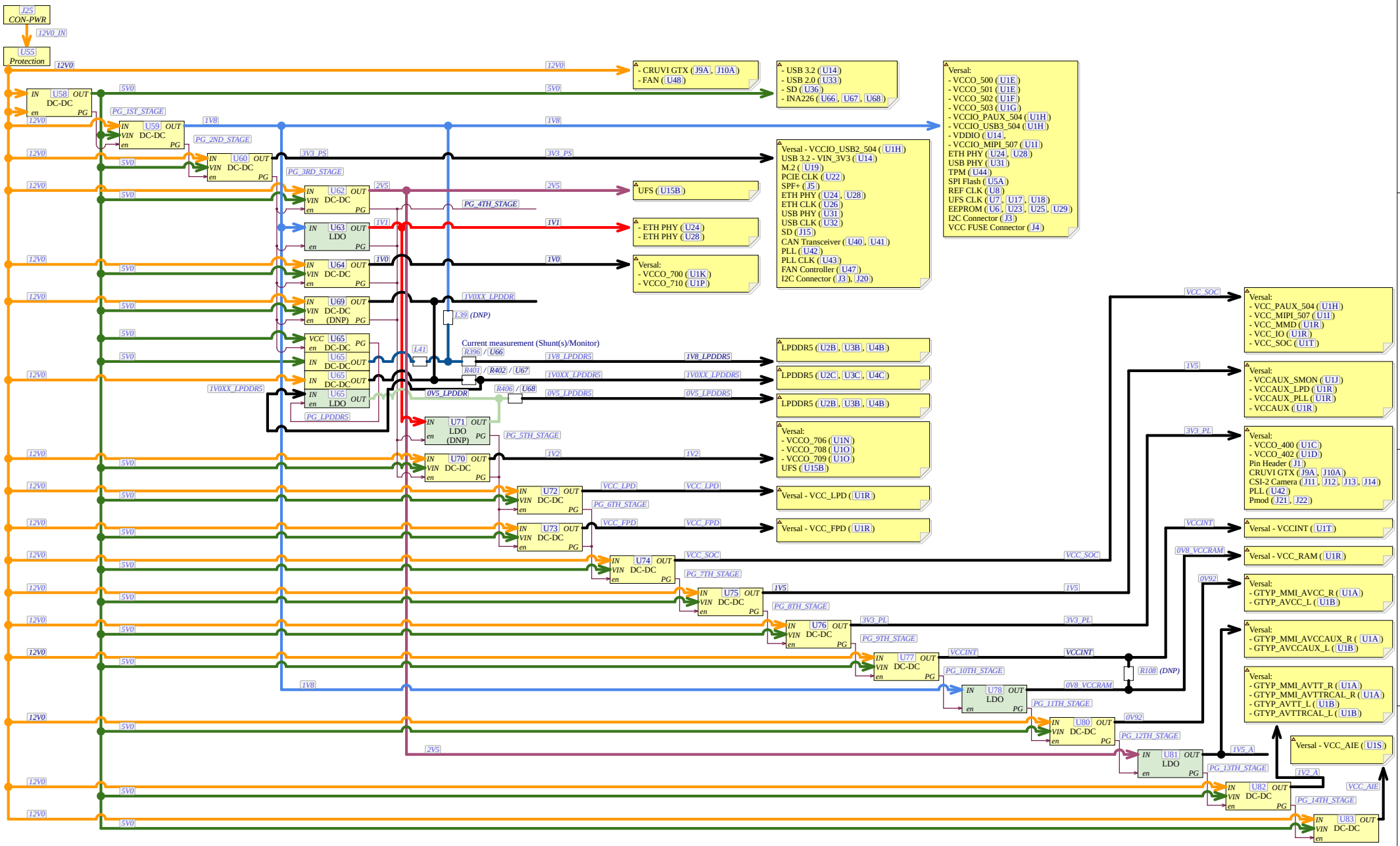
J25 CON-PWR
12V0_IN
U55 Protection
12V0
5V0
U58 DC-DC
PG_1ST_STAGE
1V8
U59 DC-DC
PG_2ND_STAGE
3V3_PS
U60 DC-DC
PG_3RD_STAGE
2V5
U62 DC-DC
PG_4TH_STAGE
1V1
U63 LDO
1V0
U64 DC-DC
1V0XX_LPDDR
U69 DC-DC (DNP)
L39 (DNP)
U65 DC-DC
U65 LDO
L41
Current measurement (Shunt(s)/Monitor)
R396 / U66
R401 / R402 / U67
R406 / U68
0V5_LPDDR
PG_LPDDR5
1V0XX_LPDDR5
U71 LDO (DNP)
PG_5TH_STAGE
U70 DC-DC
1V2
U72 DC-DC
VCC_LPD
PG_6TH_STAGE
U73 DC-DC
VCC_FPD
U74 DC-DC
VCC_SOC
PG_7TH_STAGE
U75 DC-DC
PG_8TH_STAGE
U76 DC-DC
3V3_PL
PG_9TH_STAGE
U77 DC-DC
VCCINT
PG_10TH_STAGE
U78 LDO
0V8_VCCRAM
R108 (DNP)
PG_11TH_STAGE
U80 DC-DC
0V92
PG_12TH_STAGE
U81 LDO
1V5_A
PG_13TH_STAGE
U82 DC-DC
1V2_A
VCC_AIE
PG_14TH_STAGE
U83 DC-DC
- CRUVI GTX (J9A , J10A)
- FAN (U48)
- USB 3.2 (U14)
- USB 2.0 (U33)
- SD (U36)
- INA226 (U66 , U67 , U68)
Versal:
- VCCO_500 (U1E)
- VCCO_501 (U1E)
- VCCO_502 (U1F)
- VCCO_503 (U1G)
- VCCIO_PAUX_504 (U1H)
- VCCIO_USB3_504 (U1H)
- VDDIO (U14 ,
- VCCIO_MIPI_507 (U1I)
ETH PHY (U24 , U28)
USB PHY (U31)
TPM (U44)
SPI Flash (U5A)
REF CLK (U8)
UFS CLK (U7 , U17 , U18)
EEPROM (U6 , U23 , U25 , U29)
I2C Connector (J3)
VCC FUSE Connector (J4)
Versal - VCCIO_USB2_504 (U1H)
USB 3.2 - VIN_3V3 (U14)
M.2 (U19)
PCIE CLK (U22)
SPF+ (J5)
ETH PHY (U24 , U28)
ETH CLK (U26)
USB PHY (U31)
USB CLK (U32)
SD (J15)
CAN Transceiver (U40 , U41)
PLL (U42)
PLL CLK (U43)
FAN Controller (U47)
I2C Connector (J3) , J20)
UFS (U15B)
- ETH PHY (U24)
- ETH PHY (U28)
Versal:
- VCCO_700 (U1K)
- VCCO_710 (U1P)
LPDDR5 (U2B , U3B , U4B)
LPDDR5 (U2C , U3C , U4C)
LPDDR5 (U2B , U3B , U4B)
Versal:
- VCCO_706 (U1N)
- VCCO_708 (U1O)
- VCCO_709 (U1O)
UFS (U15B)
Versal - VCC_LPD (U1R)
Versal - VCC_FPD (U1R)
Versal:
- VCC_PAUX_504 (U1H)
- VCC_MIPI_507 (U1I)
- VCC_MMD (U1R)
- VCC_IO (U1R)
- VCC_SOC (U1T)
Versal:
- VCCAUX_SMON (U1J)
- VCCAUX_LPD (U1R)
- VCCAUX_PLL (U1R)
- VCCAUX (U1R)
Versal:
- VCCO_400 (U1C)
- VCCO_402 (U1D)
Pin Header (J1)
CRUVI GTX (J9A , J10A)
CSI-2 Camera (J11 , J12 , J13 , J14)
PLL (U42)
Pmod (J21 , J22)
Versal - VCCINT (U1T)
Versal - VCC_RAM (U1R)
Versal:
- GTYP_MMI_AVCC_R (U1A)
- GTYP_AVCC_L (U1B)
Versal:
- GTYP_MMI_AVCCAUX_R (U1A)
- GTYP_AVCCAUX_L (U1B)
Versal:
- GTYP_MMI_AVTT_R (U1A)
- GTYP_MMI_AVTTRCAL_R (U1A)
- GTYP_AVTT_L (U1B)
- GTYP_AVTTRCAL_L (U1B)
Versal - VCC_AIE (U1S)
Legend
EN_GT_R
Net name
Power bus
Control signal
Power converter
Logic AND gate
trenz electronic
Title: TE0960 – Power Overview
A3
Nummer: TE0960 GCME74A
Rev. 01
Datum: 18.09.2026
Copyright:Trenz Electronic GmbH
Page 3 of 55
Filename: Power_Diagram.SchDoc

System Overview

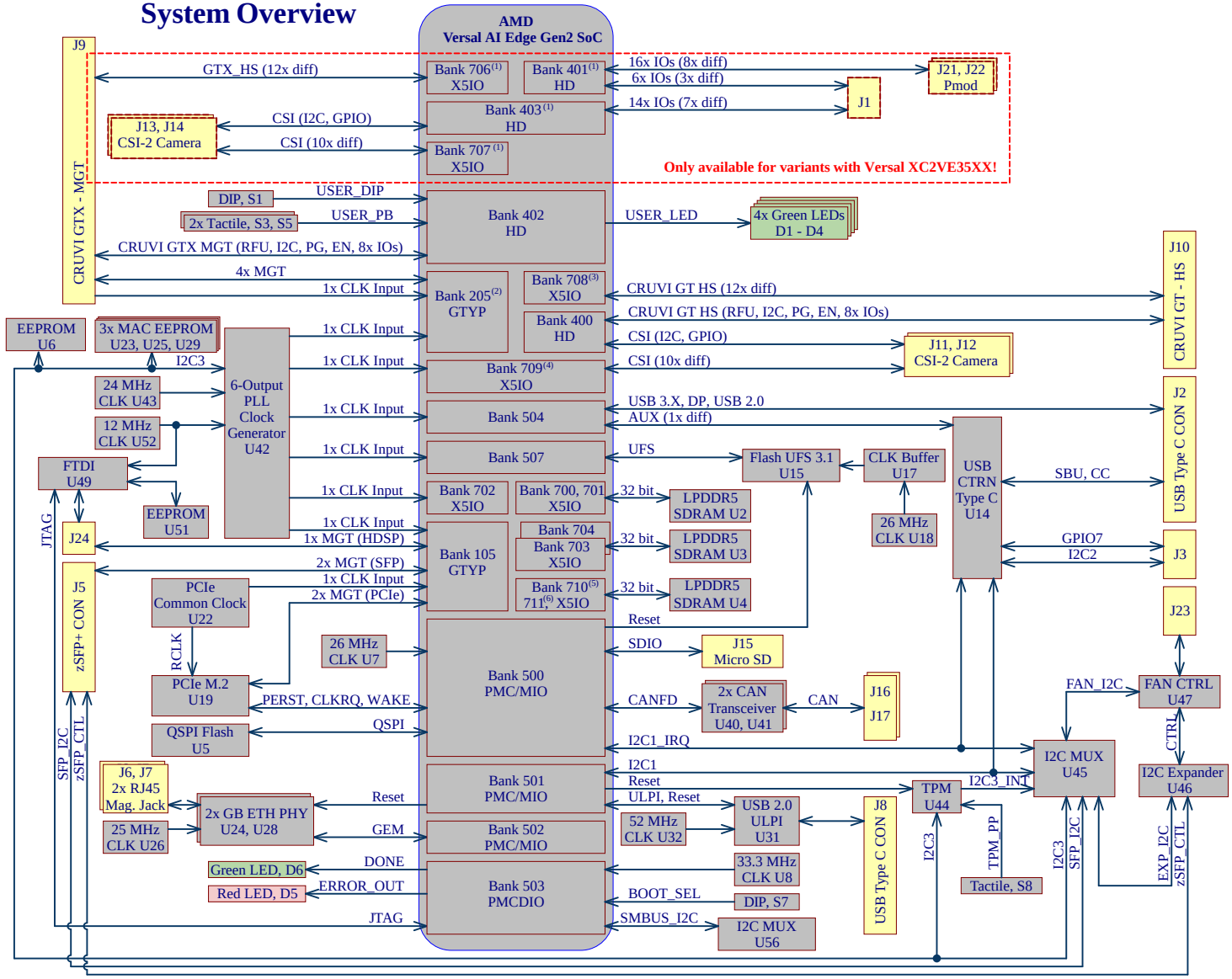

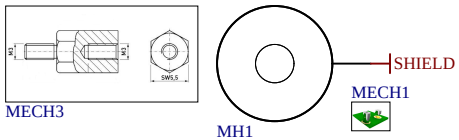

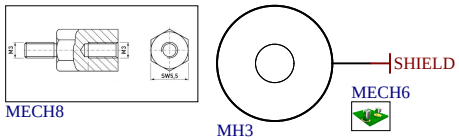

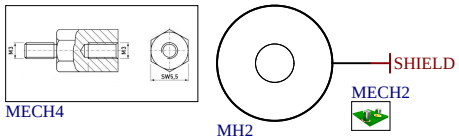

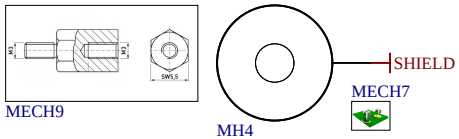

TE0960	POWER_3
VERSAL_POWER_1	POWER_4
VERSAL_POWER_2	POWER_5
VERSAL_GND_1	POWER_6
VERSAL_GND_2	POWER_7
LPDDR5-RAM_1_PWR	POWER_8
LPDDR5-RAM_2_PWR	POWER_9
LPDDR5-RAM_3_PWR	POWER_10
POWER_2	POWER_11

Notes:

(1) - Only available for variants with Versal XC2VE35xx and not for variants with Versal XC2VE33xx.
(2) - Bank 205 for XC2VE35xx / Bank 203 for XC2VE33xx.
(3) - Bank 708 for XC2VE35xx / Bank 706 for XC2VE33xx.
(4) - Bank 709 for XC2VE35xx / Bank 707 for XC2VE33xx.
(5) - Bank 710 for XC2VE35xx / Bank 708 for XC2VE33xx.
(6) - Bank 711 for XC2VE35xx / Bank 709 for XC2VE33xx.

trenz electronic

Title: TE0960 – System Overview		
A4	Number: TE0960 GCME74A	Rev. 01
Date: 09.11.2026	Copyright: Trenz Electronic GmbH	Page 4 of 55
Filename: TE0960-Overview.SchDoc		

Special notes:

I2C Addresses - SMBus:

Device	Bus	Sub-Bus	Address	
MPSoC U1G	SMBUS	-	-	AMD Versal Gen 2
I2C Multiplexer U56	SMBUS	-	0x70	I2C Multiplexer
DCDC 5V0 U58	SMBUS	DCDC0	0x08	5V0 DCDC
DCDC 1V8 U59	SMBUS	DCDC0	0x0D	1V8 DCDC
DCDC 3V3_PS U60	SMBUS	DCDC0	0x0B	3V3_PS DCDC
DCDC 1V0 U64	SMBUS	DCDC0	0x09	1V0 DCDC
DCDC 1V0XX_LPDDR5 U69	SMBUS	DCDC0	0x0A	1V0XX_LPDDR5 DCDC (default: DNP)
DCDC 1V2 U70	SMBUS	DCDC1	0x09	1V2 DCDC
DCDC VCC_LPD U72	SMBUS	DCDC1	0x0A	VCC_LPD DCDC
DCDC 1V5 U75	SMBUS	DCDC1	0x08	1V5 DCDC
DCDC 3V3_PL U76	SMBUS	DCDC1	0x0B	3V3_PL DCDC
DCDC 2V5 U62	SMBUS	DCDC2	0x09	2V5 DCDC
DCDC VCC_SOC U74	SMBUS	DCDC2	0x11	VCC_SOC (I2C)
DCDC VCC_SOC U74	SMBUS	DCDC2	0x71	VCC_SOC (PMBus)
DCDC VCCINT U77	SMBUS	DCDC2	0x13	VCCINT (I2C)
DCDC VCCINT U77	SMBUS	DCDC2	0x73	VCCINT (PMBus)
DCDC VCC_FPD U73	SMBUS	DCDC2	0x15	VCC_FPD (I2C)
DCDC VCC_FPD U73	SMBUS	DCDC2	0x75	VCC_FPD (PMBus)
DCDC 0V92 U80	SMBUS	DCDC2	0x0D	0V92 DCDC
DCDC 1V2_A U82	SMBUS	DCDC2	0x0B	1V2_A DCDC
DCDC VCC_AIE U83	SMBUS	DCDC2	0x14	VCC_AIE (I2C)
DCDC VCC_AIE U83	SMBUS	DCDC2	0x74	VCC_AIE (PMBus)
INA 1V8_LPDDR5 U66	SMBUS	INA	0x40	INA 1V8_LPDDR5
INA 1V0XX_LPDDR5 U67	SMBUS	INA	0x41	INA 1V0XX_LPDDR5
INA 0V5_LPDDR5 U68	SMBUS	INA	0x42	INA 0V5_LPDDR5

Supported Voltage Ranges:

Power Rail	Direction	Range	Tolerance	Description	Note
12V0_IN	IN	12 V	+/- 5 %	Power Input	-
VBATT	IN	3 V	-	RTC backup power	-

I2C Addresses - Bus I2C1:

Device	Bus	Sub-Bus	Address	Note
MPSoC U1E	I2C1	-	-	AMD Versal Gen 2
USB Controller U14	I2C1	-	0x22	USB 3.2 Controller
I2C Multiplexer U45	I2C1	-	0x70	I2C Multiplexer
IO Expander U46	I2C1	EXP	0x26	I2C IO Expander
zSFP+ J5	I2C1	SFP	0x50	zSFP+
zSFP+ J5	I2C1	SFP	0x51	zSFP+
FAN controller U47	I2C1	FAN	0x18	FAN controller
PLL U42	I2C1	FAN	0x6A	PLL (via patch)
EEPROM U6	I2C1	I2C3	0x53	EEPROM
EEPROM U23	I2C1	I2C3	0x52	MAC-EEPROM with user area
EEPROM U25	I2C1	I2C3	0x50	MAC-EEPROM with user area
EEPROM U29	I2C1	I2C3	0x51	MAC-EEPROM with user area
TPM U44	I2C1	I2C3	0x2E	Trusted Platform Modul

I2C Addresses - Bus I2C2:

Device	Address	Note
Pin Header J3	-	AMD Versal Gen 2
USB Controller U14	0x52	USB 3.2 Controller

PM1 PM2 PM3 PM4 PM5 PM6



FIDU-DOT - mini FIDU-DOT - mini FIDU-DOT - mini FIDU-DOT - mini FIDU-DOT - mini FIDU-DOT - mini

Design drawn by:	ED
Checked by:	VY
Assembly variant:	GCME74A
Created by:	ED
Modified by:	ED
Modified at:	2026-09-02

trenz electronic

Title: TE0960			
A4	Number: TE0960 GCME74A		Rev. 01
Date: 09.11.2026	Copyright: Trenz Electronic GmbH		Page 5 of 55
Filename: TE0960.SchDoc			

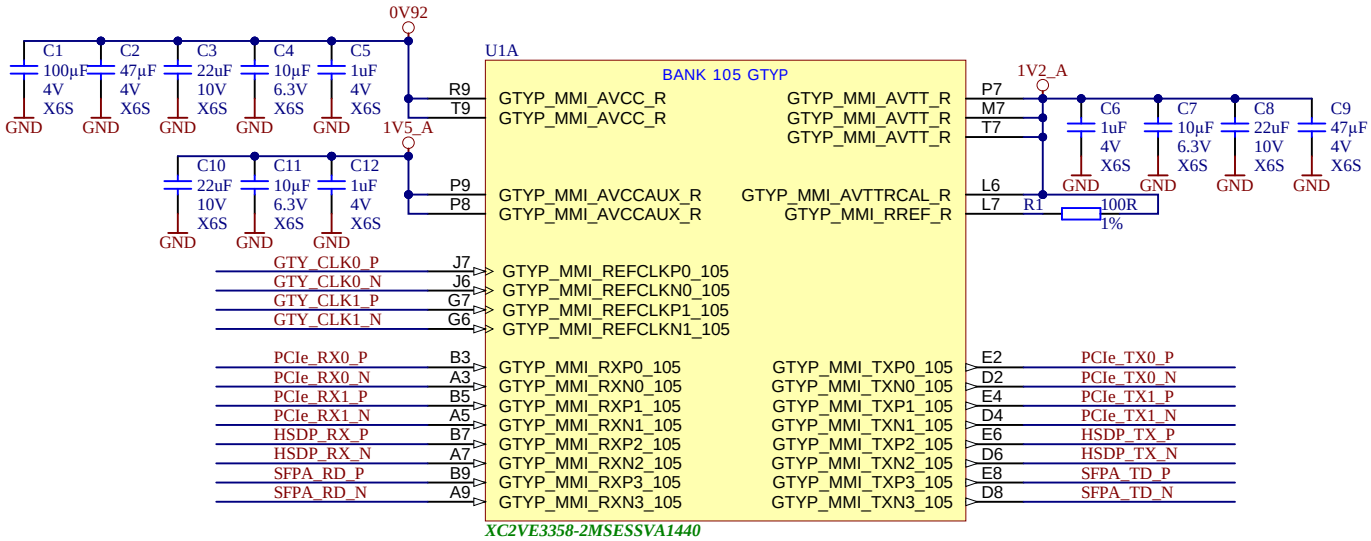



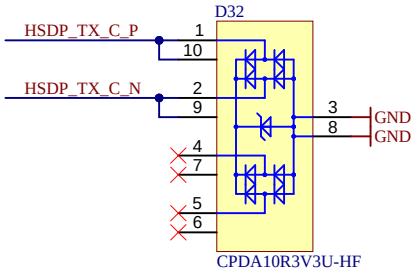

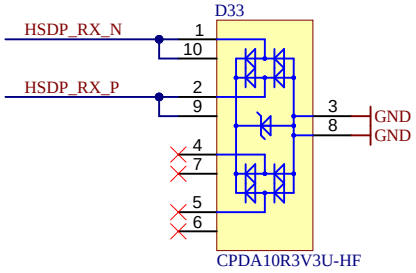

Title: TE0960 – B_GTYP_MMI			
A4	Number: TE0960 GCME74A		Rev. 01
Date: 18.09.2026	Copyright: Trenz Electronic GmbH		Page 6 of 55
Filename: B_GTYP_MMI.SchDoc			

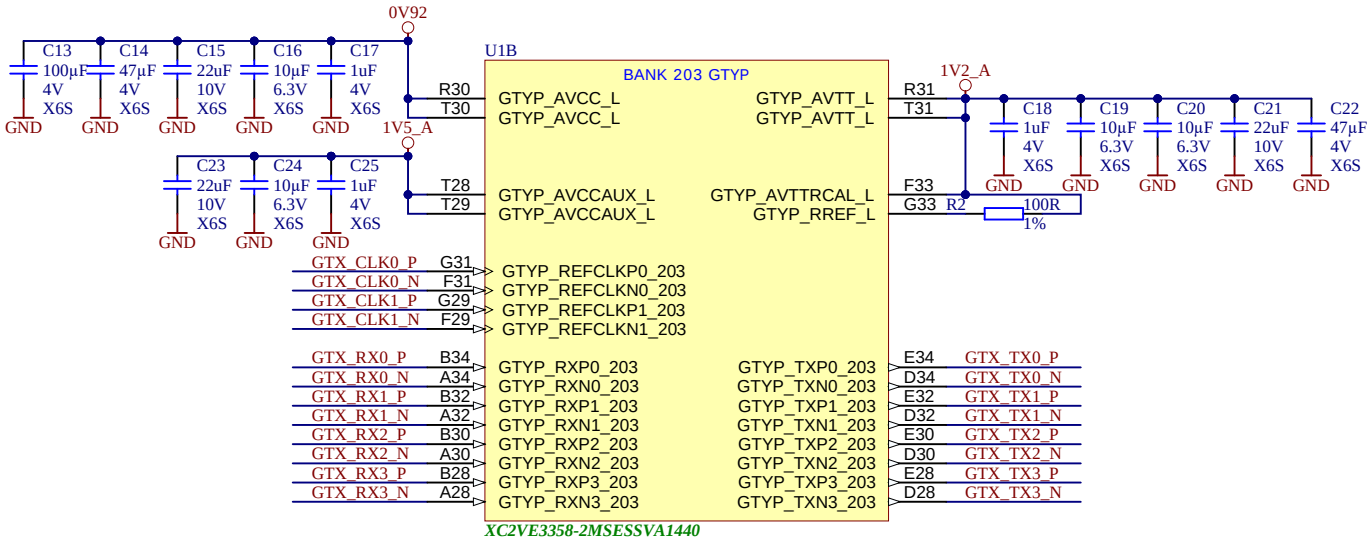

trenz electronic	Title: TE0960 – B_GTYP		
A4	Number: TE0960 GCME74A		Rev. 01
Date: 18.09.2026	Copyright: Trenz Electronic GmbH		Page 7 of 55
Filename: B_GTYP.SchDoc			

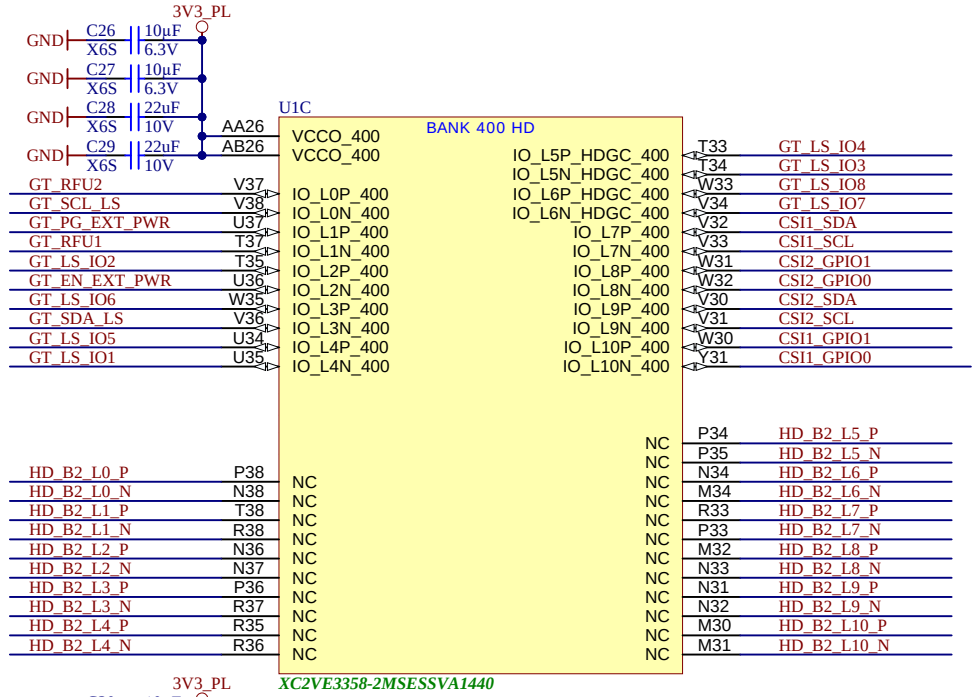

Only available for variants with Versal XC2VE35XX!

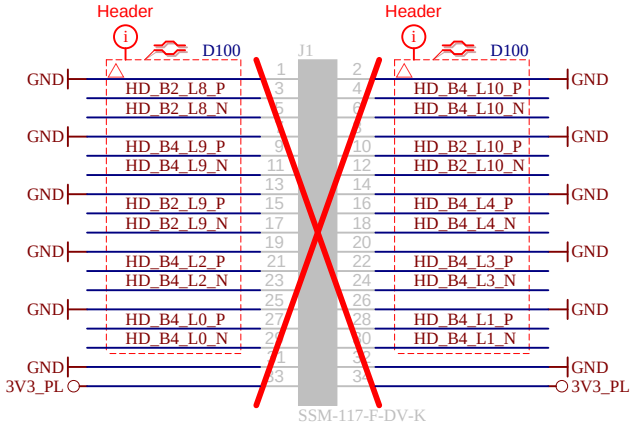

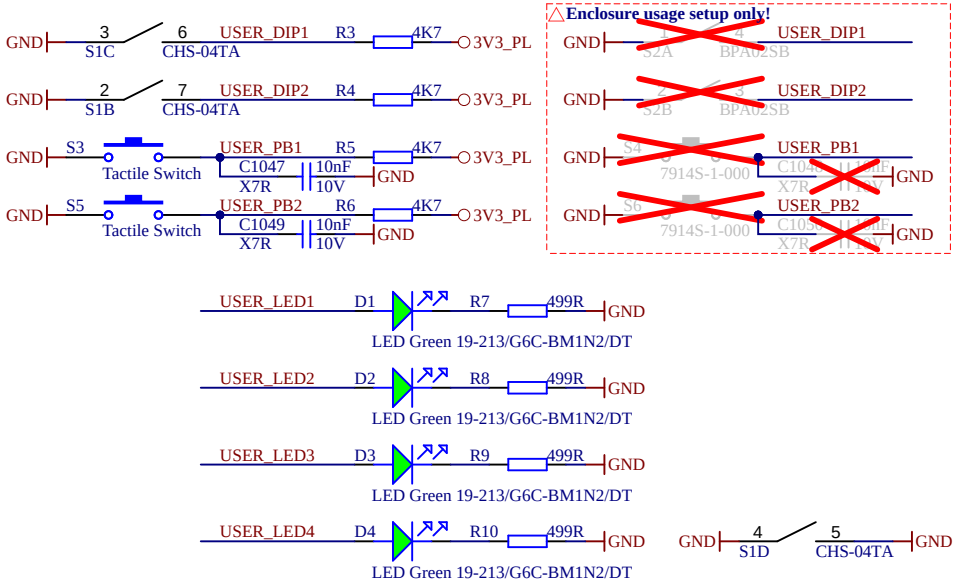

trenz electronic

Title: TE0960 – B_HDIO			
A4	Number: TE0960 GCME74A		Rev. 01
Date: 18.09.2026	Copyright: Trenz Electronic GmbH		Page 8 of 55
Filename: B_HDIO.SchDoc			

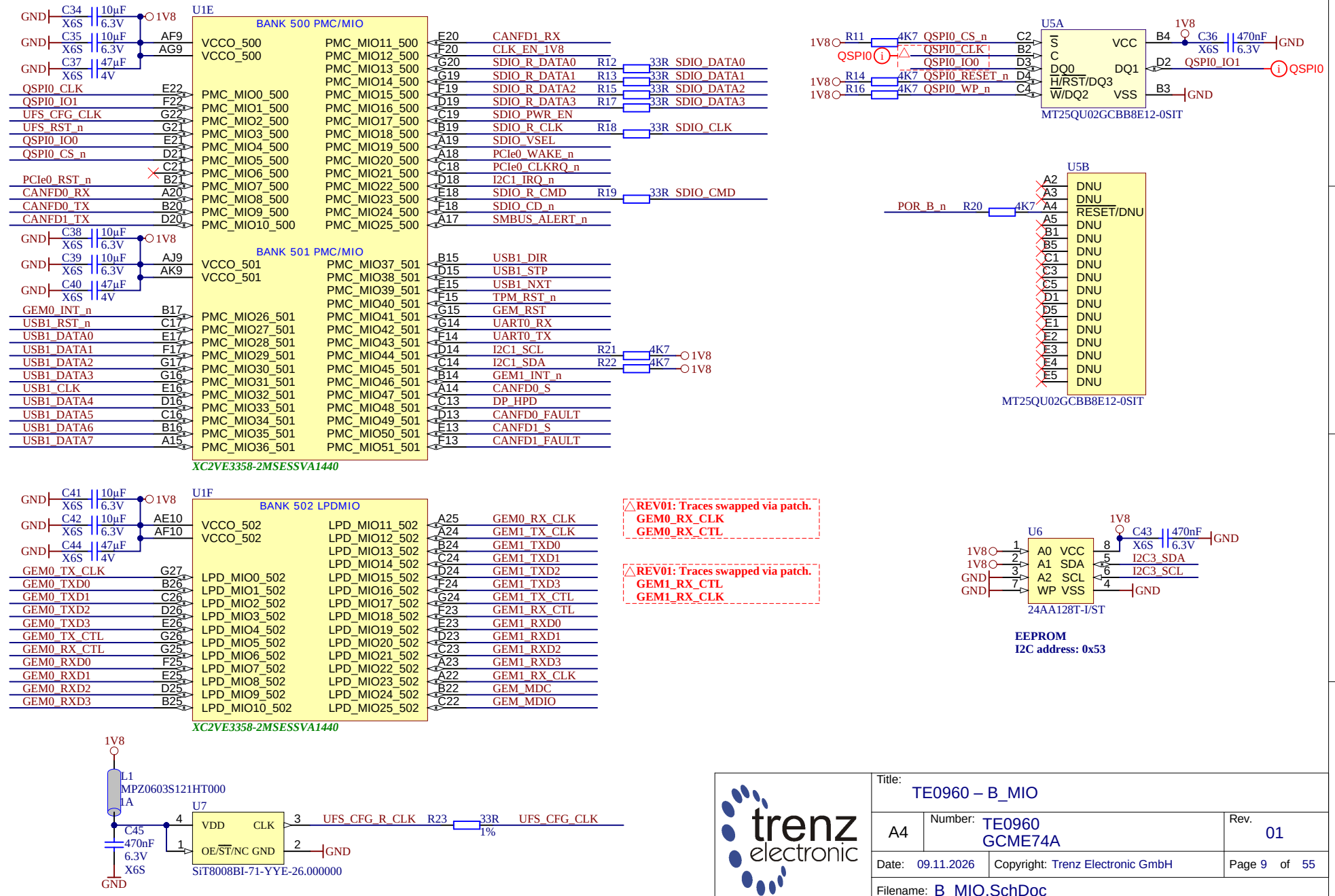

Title: TE0960 – B_MIO			
A4	Number: TE0960 GCME74A		Rev. 01
Date: 09.11.2026	Copyright: Trenz Electronic GmbH		Page 9 of 55
Filename: B_MIO.SchDoc			

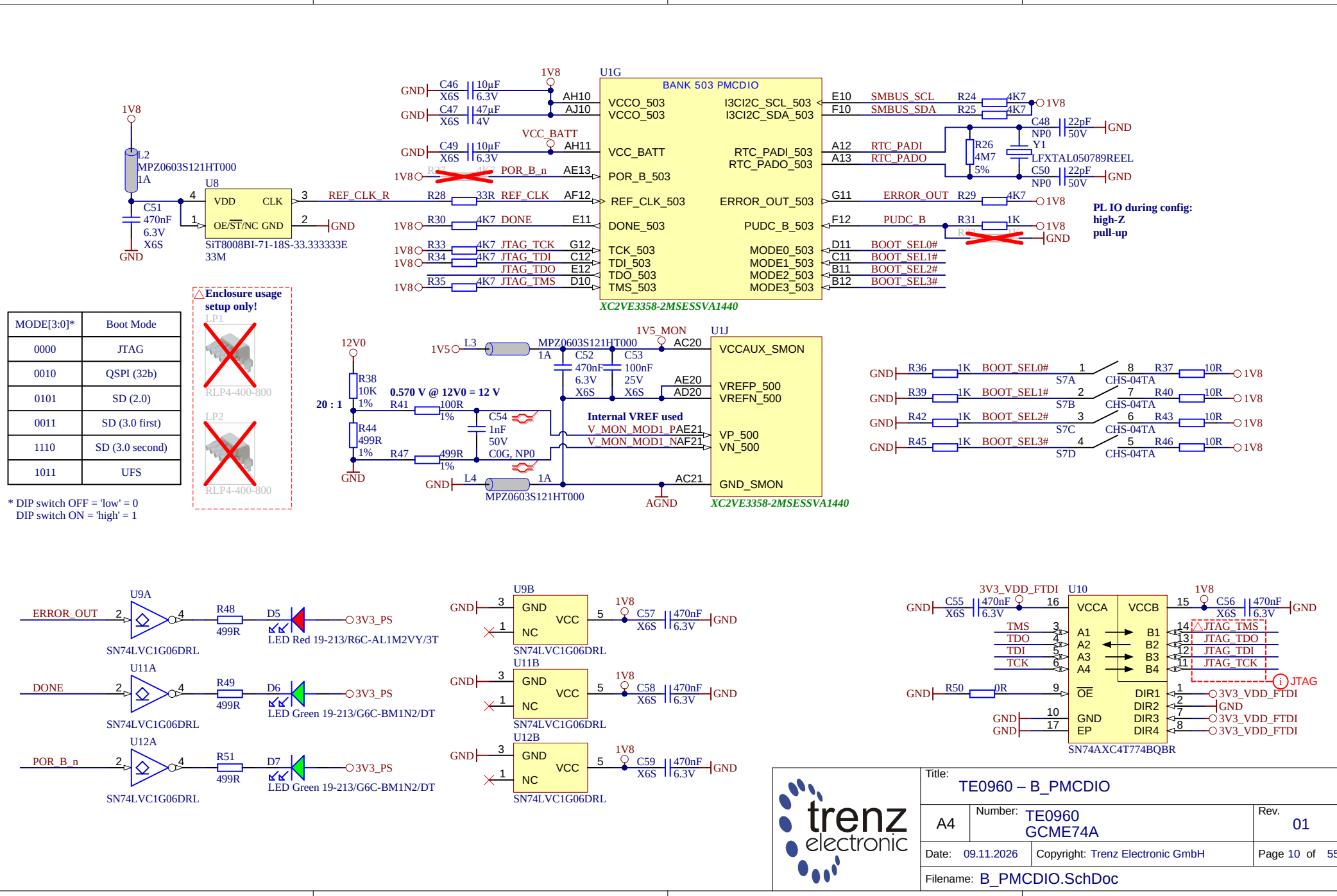

Title:	TE0960 – B_PMCDIO
A4	Number: TE0960 GCME74A
	Rev. 01
Date: 09.11.2026	Copyright: Trenz Electronic GmbH
	Page 10 of 55
Filename: B_PMCDIO.SchDoc	

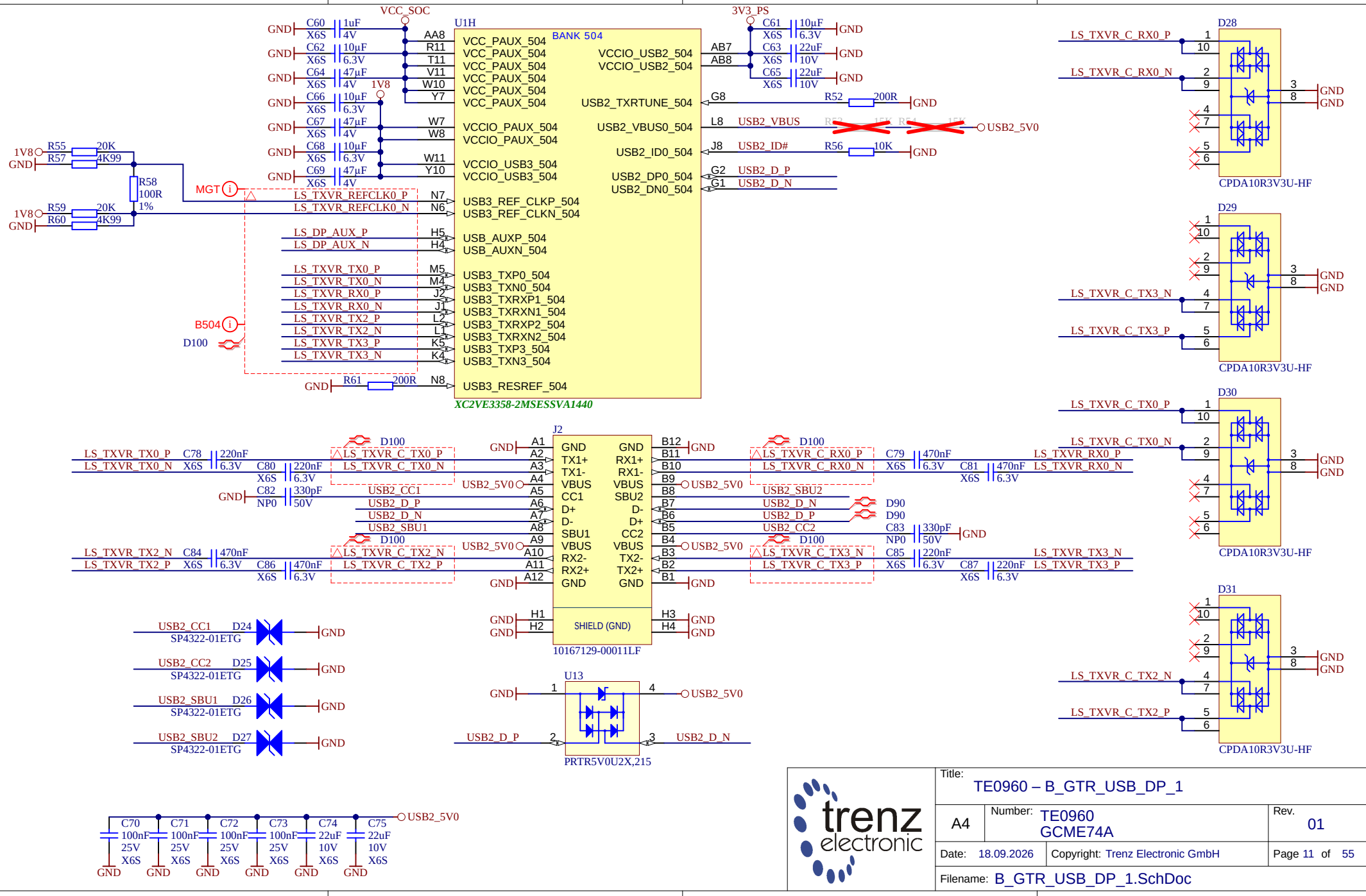

Title: TE0960 – B_GTR_USB_DP_1		
A4	Number: TE0960 GCME74A	Rev. 01
Date: 18.09.2026	Copyright: Trenz Electronic GmbH	Page 11 of 55
Filename: B_GTR_USB_DP_1.SchDoc		

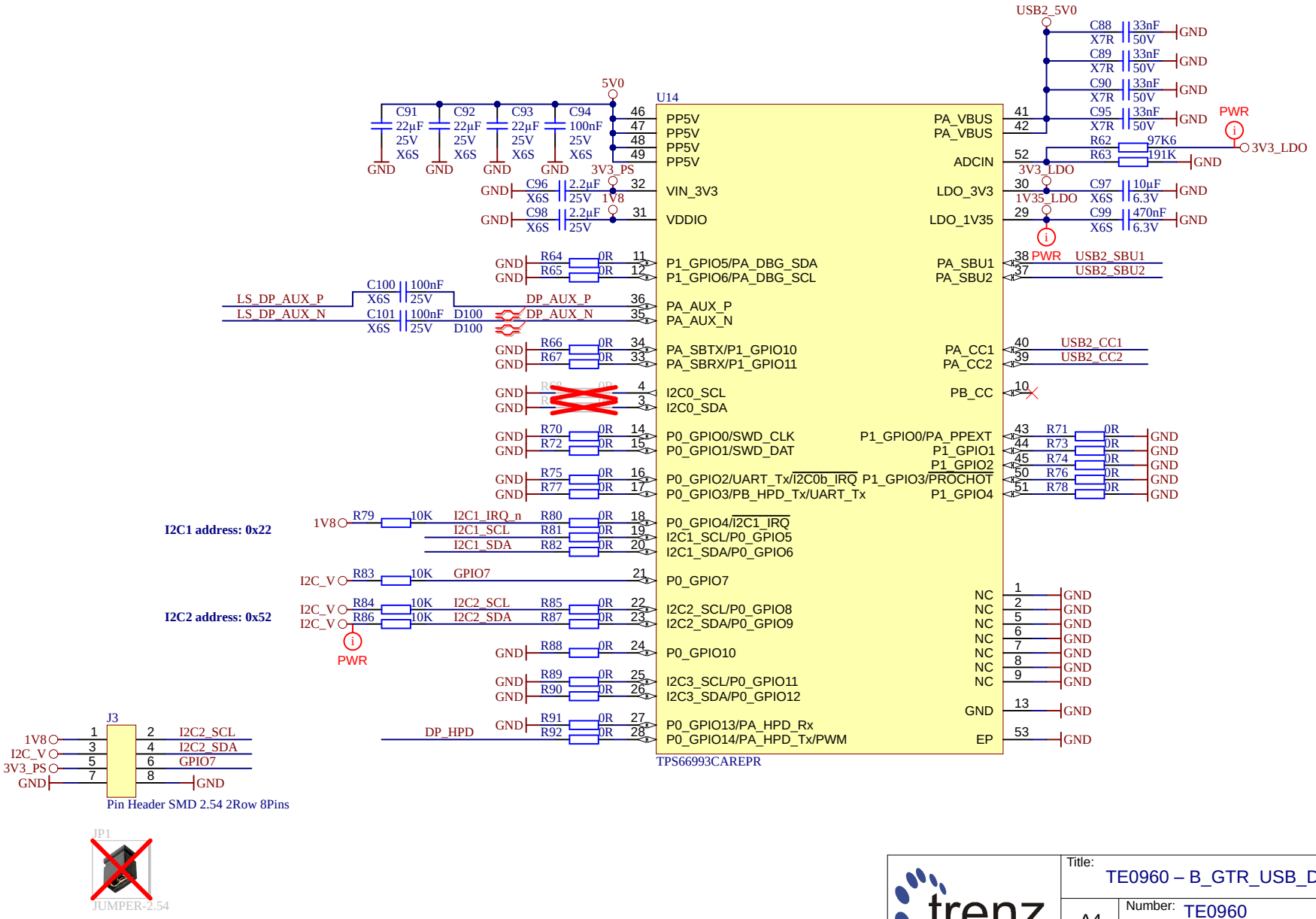

trenz electronic	Title: TE0960 – B_GTR_USB_DP_2		
	A4	Number: TE0960 GCME74A	Rev. 01
	Date: 18.09.2026	Copyright: Trenz Electronic GmbH	Page 12 of 55
	Filename: B_GTR_USB_DP_2.SchDoc		

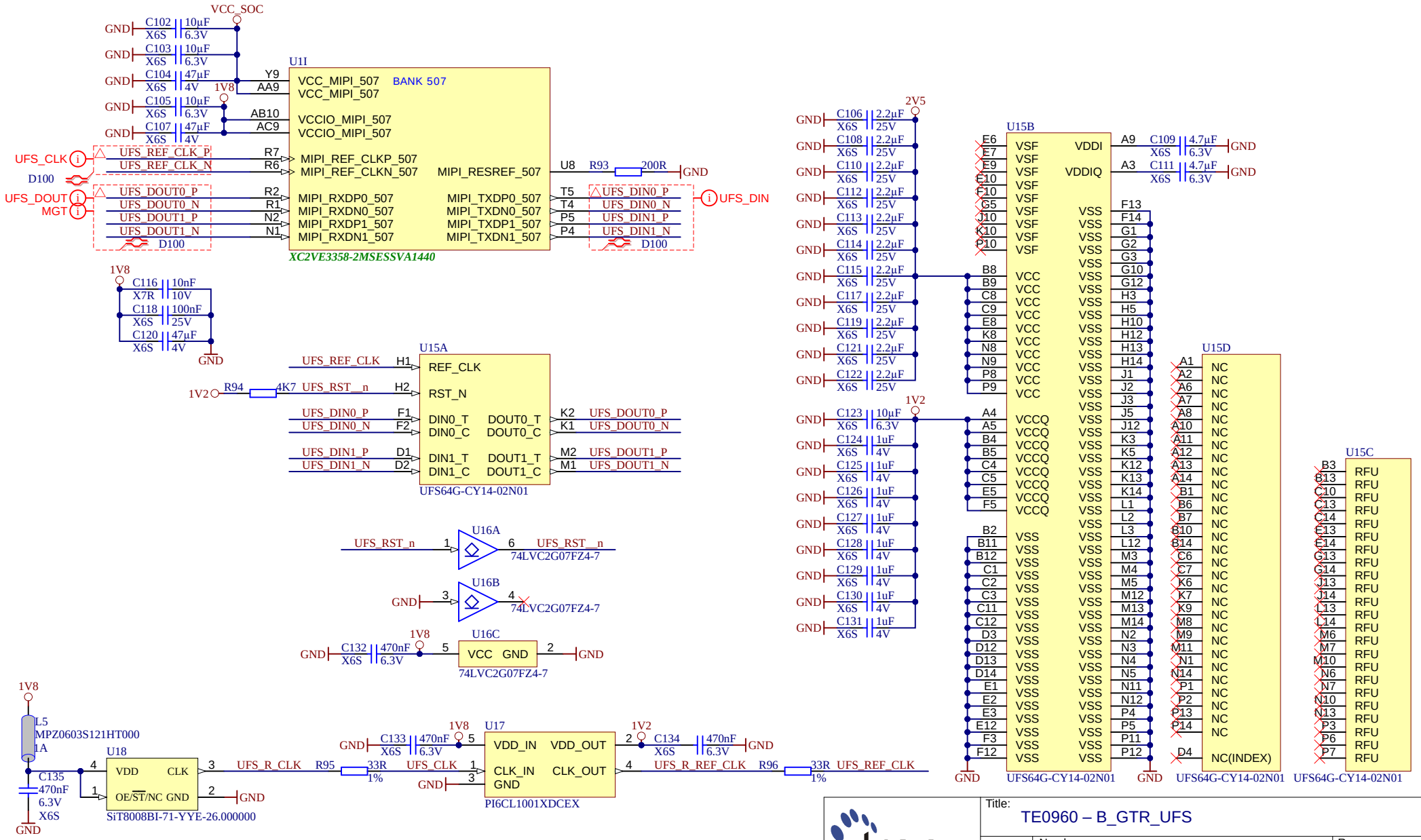

Title:	TE0960 – B_GTR_UFS
A4	Number: TE0960 GCME74A
	Rev. 01
Date: 18.09.2026	Copyright: Trenz Electronic GmbH
	Page 13 of 55
Filename:	B_GTR_UFS.SchDoc

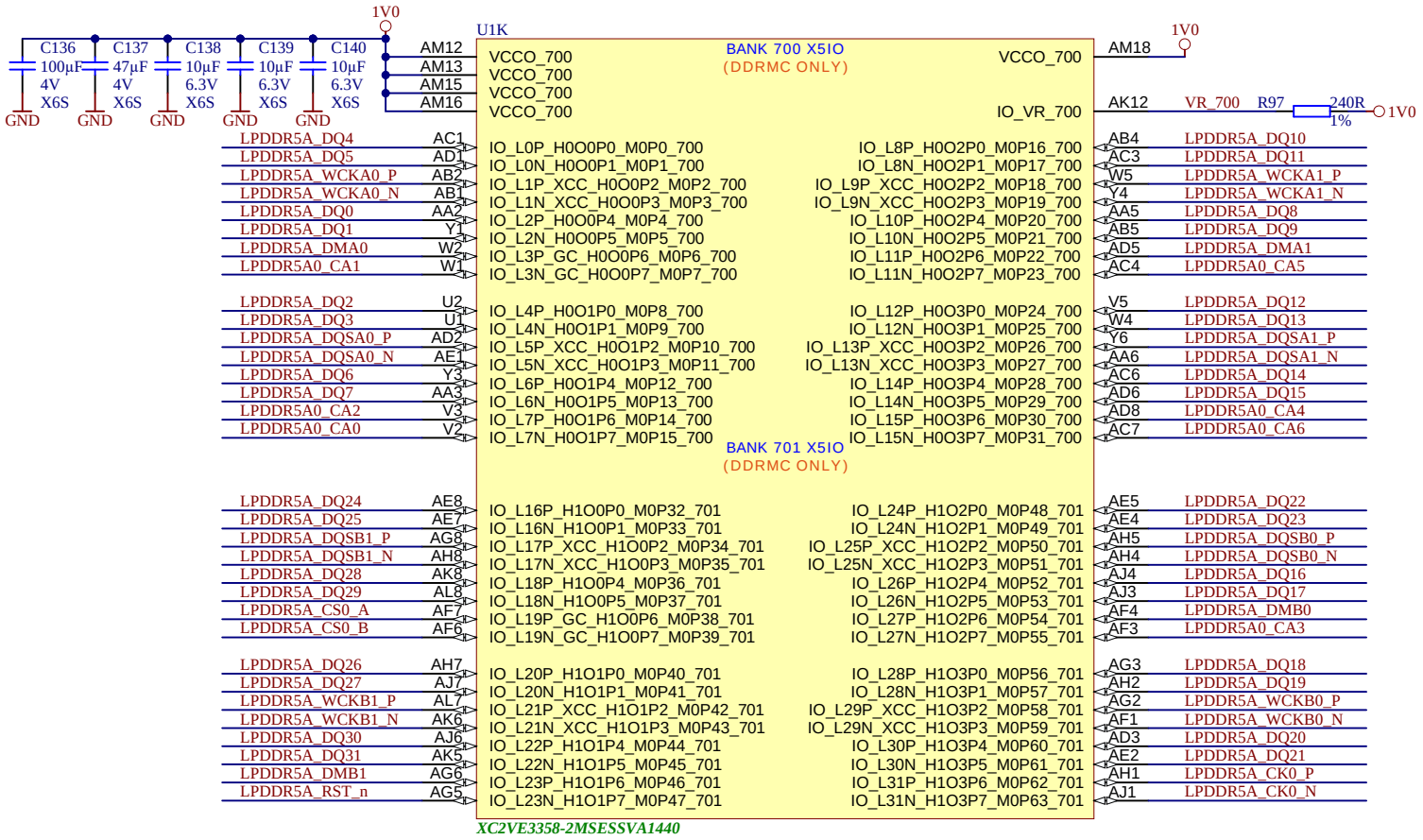

trenz electronic	Title: TE0960 – B_X5IO_1		
A4	Number: TE0960 GCME74A		Rev. 01
Date: 18.09.2026	Copyright: Trenz Electronic GmbH		Page 14 of 55
Filename: B_X5IO_1.SchDoc			

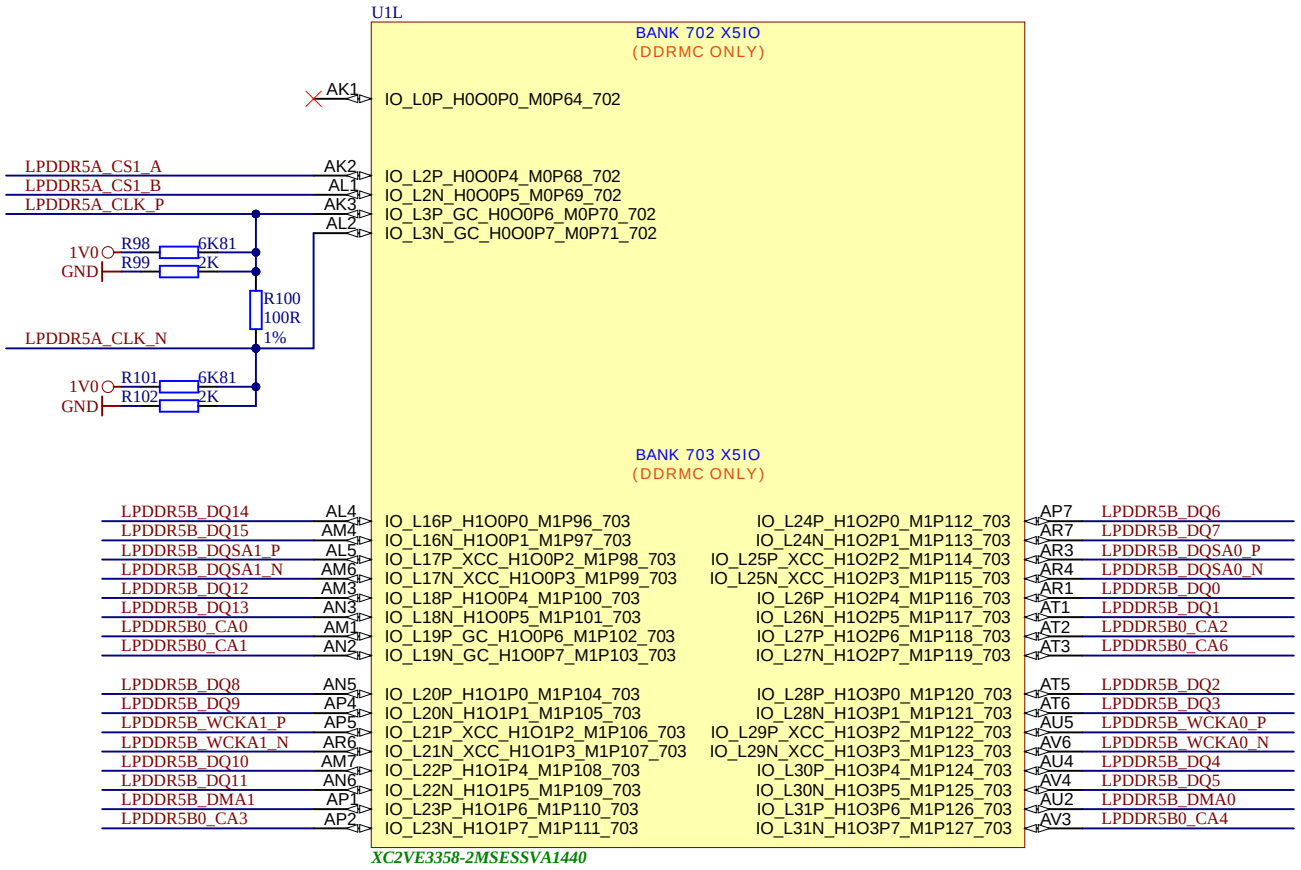

trenz electronic	Title: TE0960 – B_X5IO_2		
A4	Number: TE0960 GCME74A		Rev. 01
Date: 18.09.2026	Copyright: Trenz Electronic GmbH		Page 15 of 55
Filename: B_X5IO_2.SchDoc			

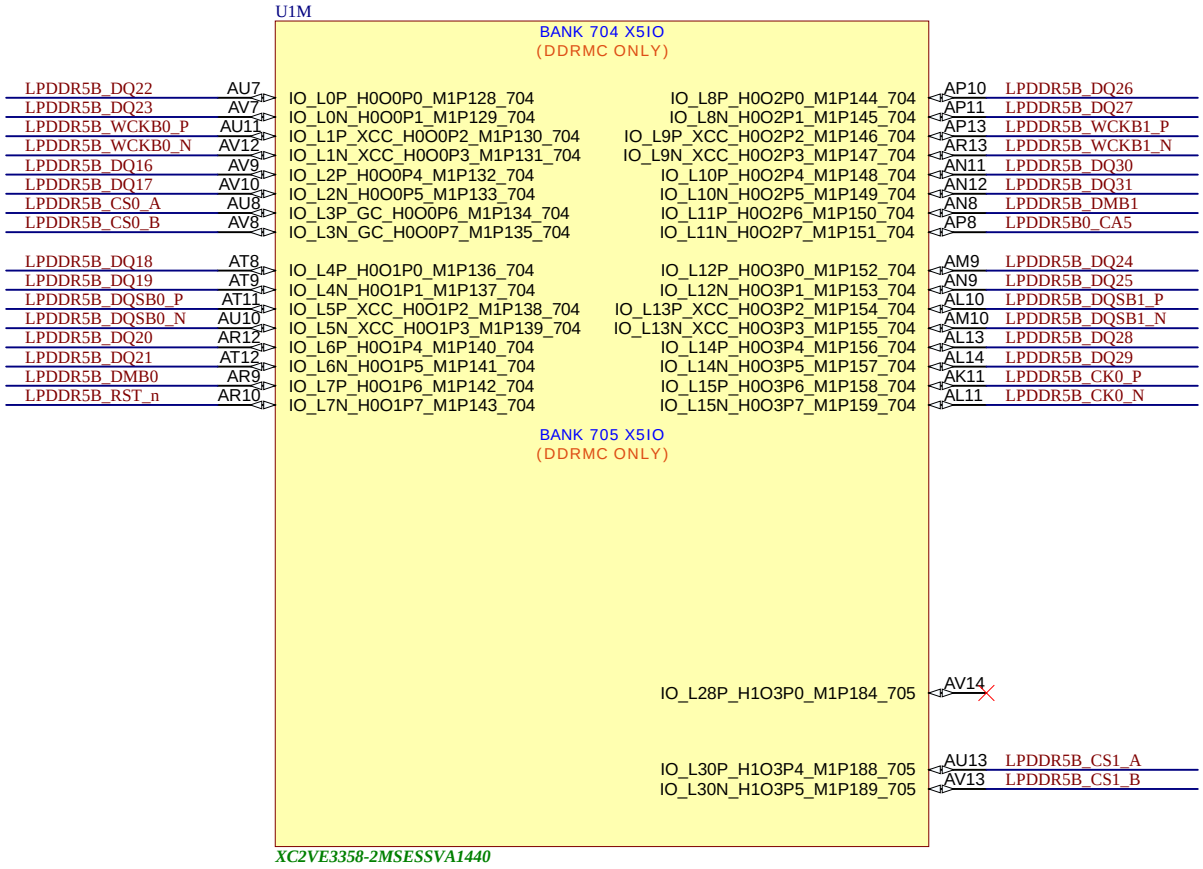

trenz electronic	Title: TE0960 – B_X5IO_3		
	A4	Number: TE0960 GCME74A	Rev. 01
	Date: 18.09.2026	Copyright: Trenz Electronic GmbH	Page 16 of 55
	Filename: B_X5IO_3.SchDoc		

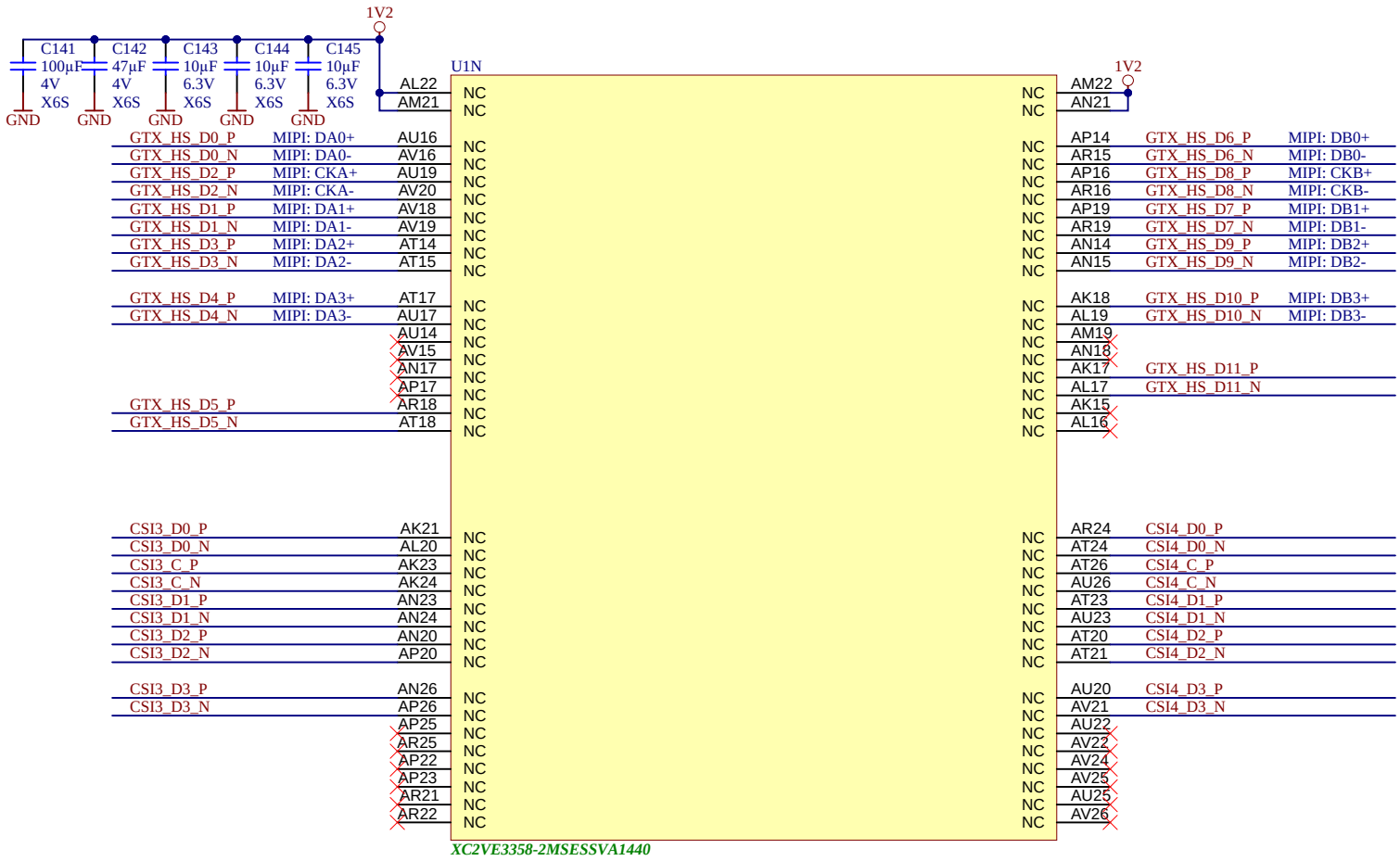

trenz electronic	Title: TE0960 – B_X5IO_4		
A4	Number: TE0960 GCME74A		Rev. 01
Date: 18.09.2026	Copyright: Trenz Electronic GmbH		Page 17 of 55
Filename: B_X5IO_4.SchDoc			

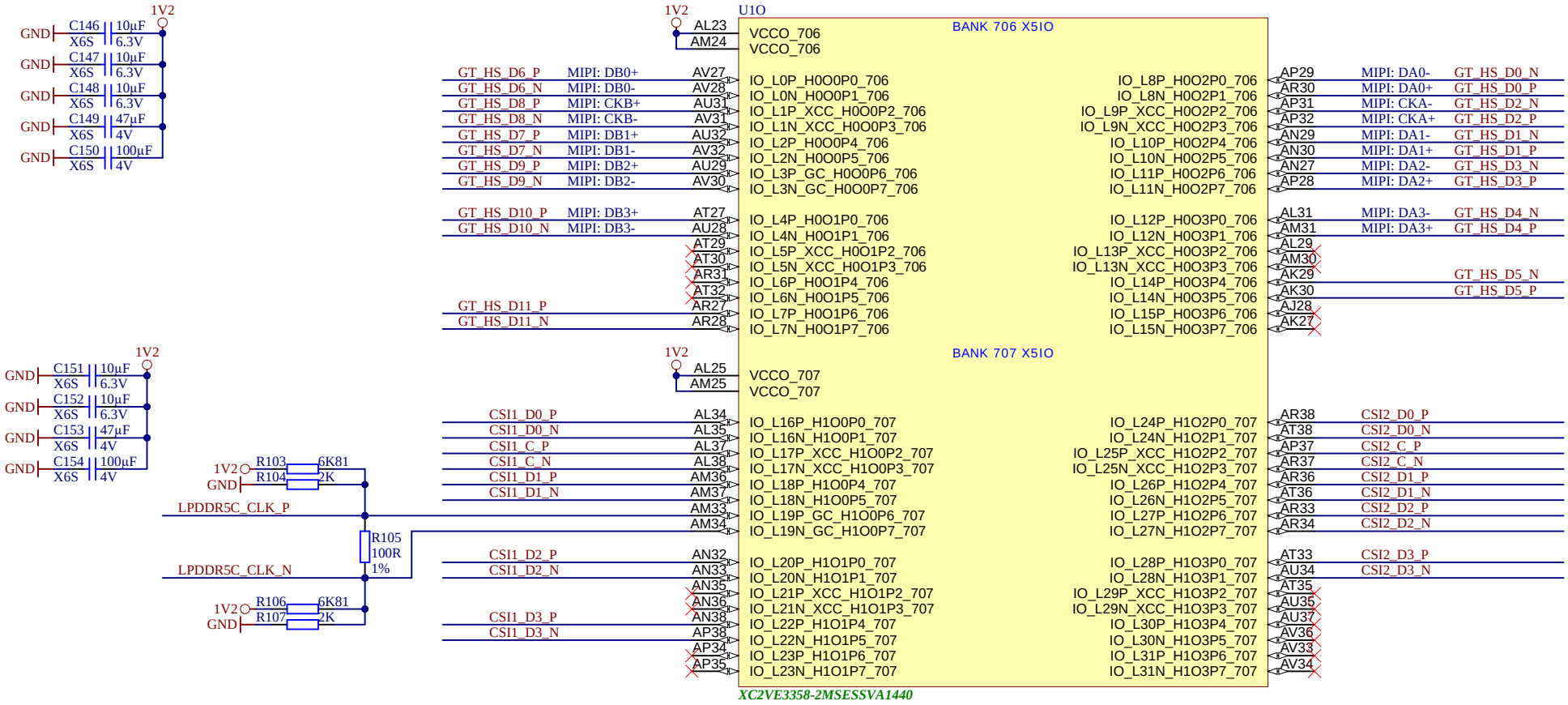

trenz electronic	Title: TE0960 – B_X5IO_5		
A4	Number: TE0960 GCME74A		Rev. 01
Date: 18.09.2026	Copyright: Trenz Electronic GmbH		Page 18 of 55
Filename: B_X5IO_5.SchDoc			

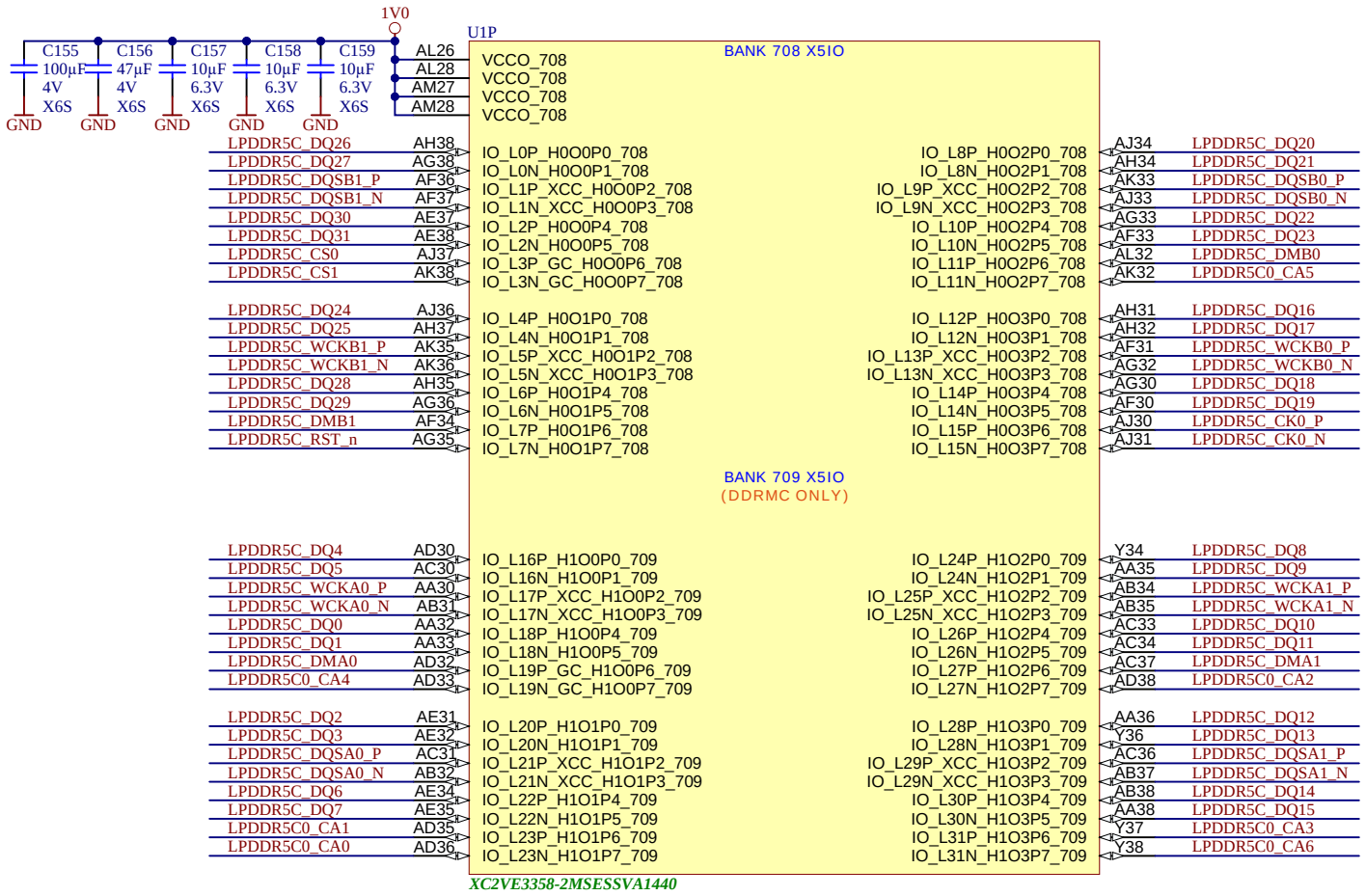

Title: TE0960 – B_X5IO_6			
A4	Number: TE0960 GCME74A		Rev. 01
Date: 18.09.2026	Copyright: Trenz Electronic GmbH		Page 19 of 55
Filename: B_X5IO_6.SchDoc			

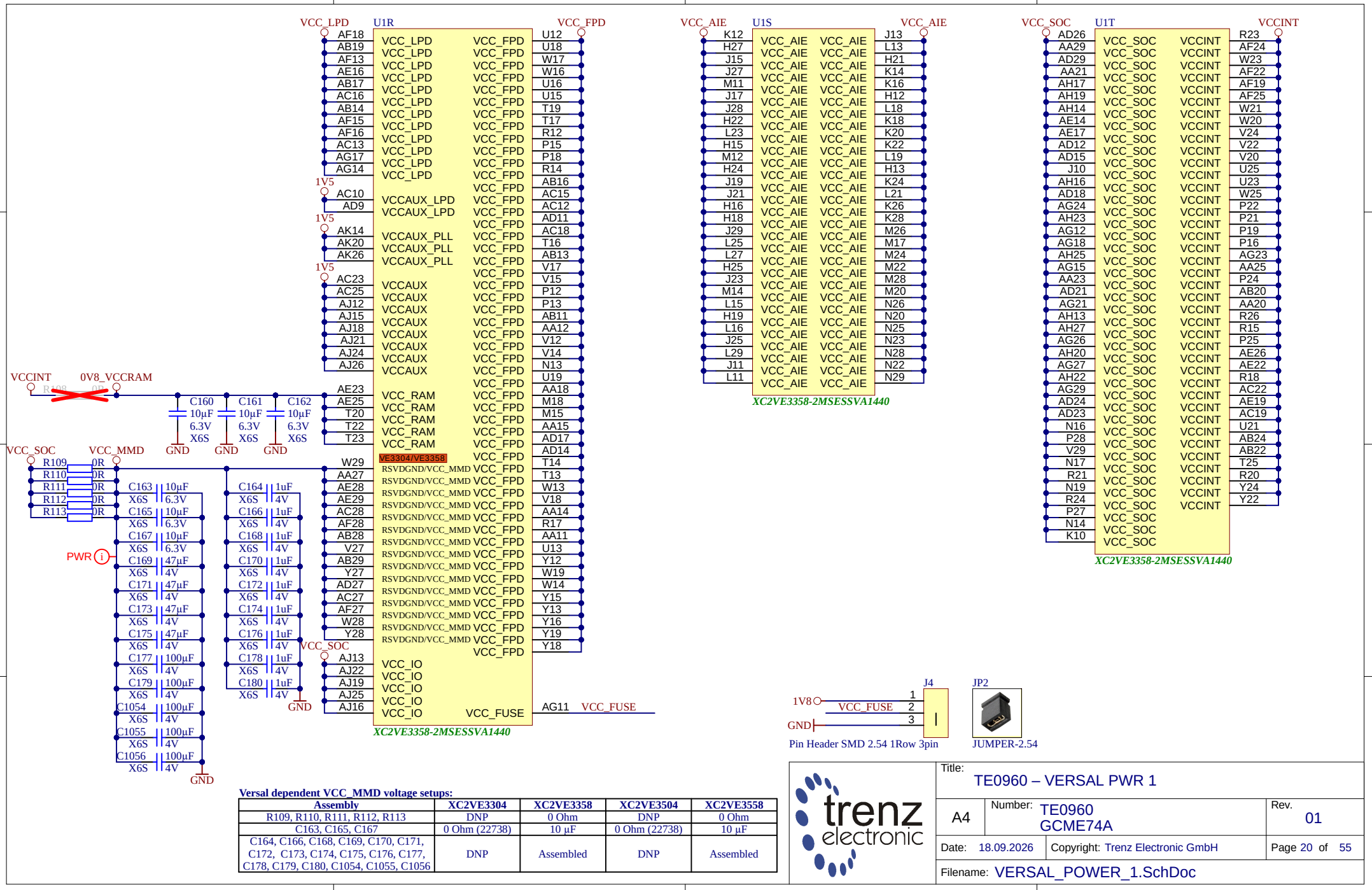

Versal dependent VCC_MMD voltage setups:

Assembly	XC2VE3304	XC2VE3358	XC2VE3504	XC2VE3558
R109, R110, R111, R112, R113	DNP	0 Ohm	DNP	0 Ohm
C163, C165, C167	0 Ohm (22738)	10 µF	0 Ohm (22738)	10 µF
C164, C166, C168, C169, C170, C171, C172, C173, C174, C175, C176, C177, C178, C179, C180, C1054, C1055, C1056	DNP	Assembled	DNP	Assembled

trenz electronic

Title: TE0960 – VERSAL PWR 1		
A4	Number: TE0960 GCME74A	Rev. 01
Date: 18.09.2026	Copyright: Trenz Electronic GmbH	Page 20 of 55
Filename: VERSAL_POWER_1.SchDoc		

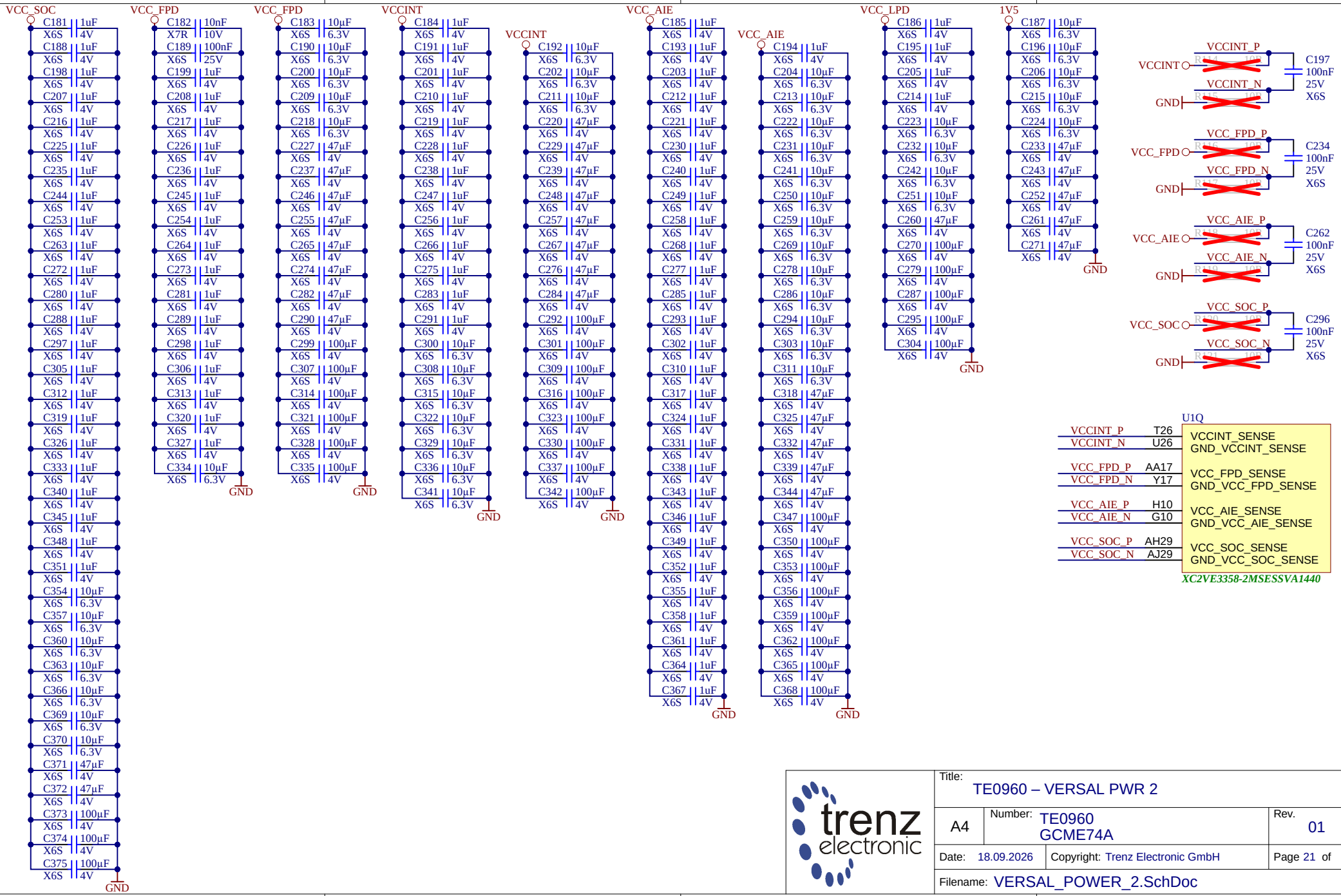

trenz electronic

Title: TE0960 – VERSAL PWR 2		
A4	Number: TE0960 GCME74A	Rev. 01
Date: 18.09.2026	Copyright: Trenz Electronic GmbH	Page 21 of 55
Filename: VERSAL_POWER_2.SchDoc		

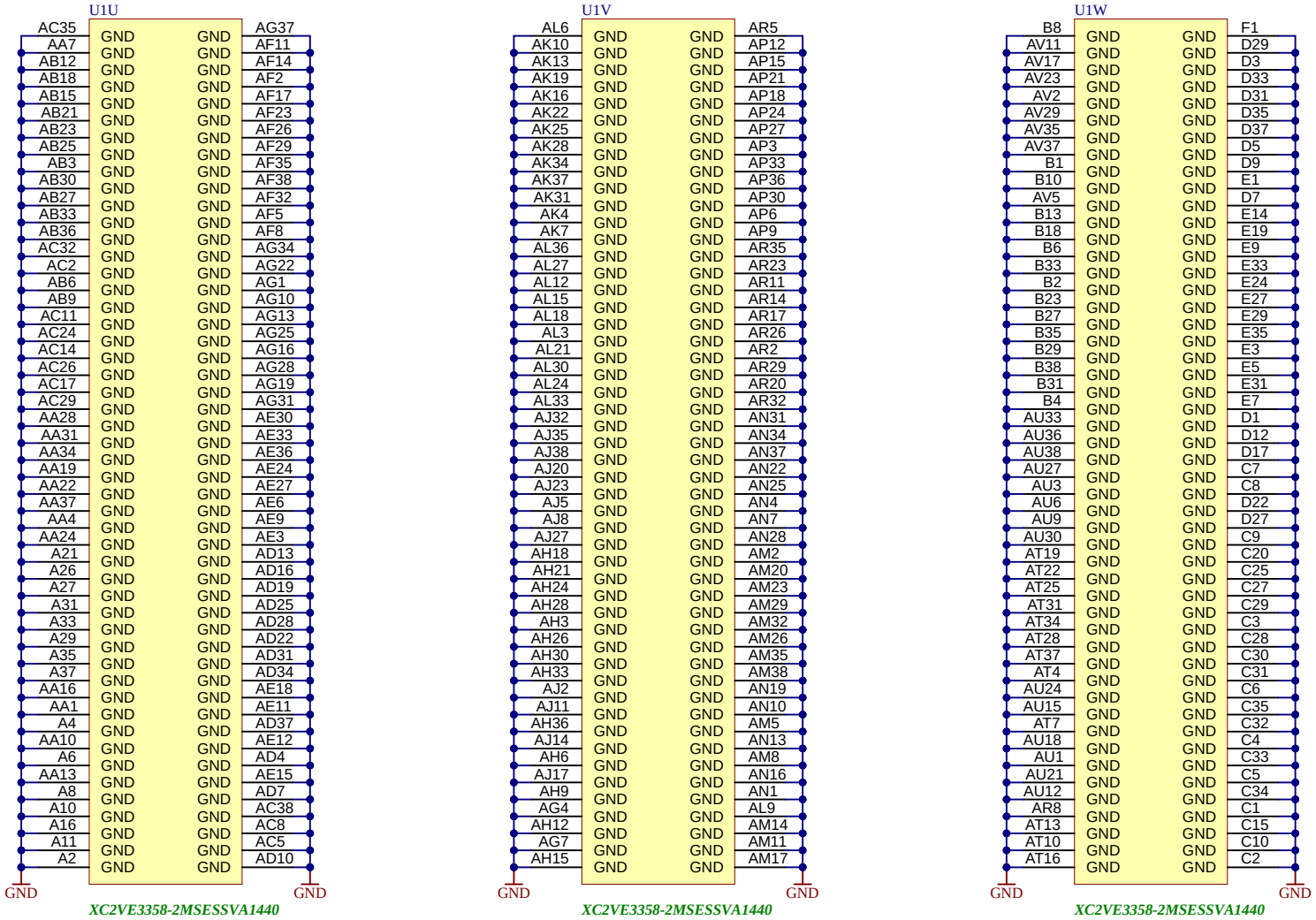

trenz electronic

Title: TE0960 – VERSAL GND 1		
A4	Number: TE0960 GCME74A	Rev. 01
Date: 18.09.2026	Copyright: Trenz Electronic GmbH	Page 22 of 55
Filename: VERSAL_GND_1.SchDoc		

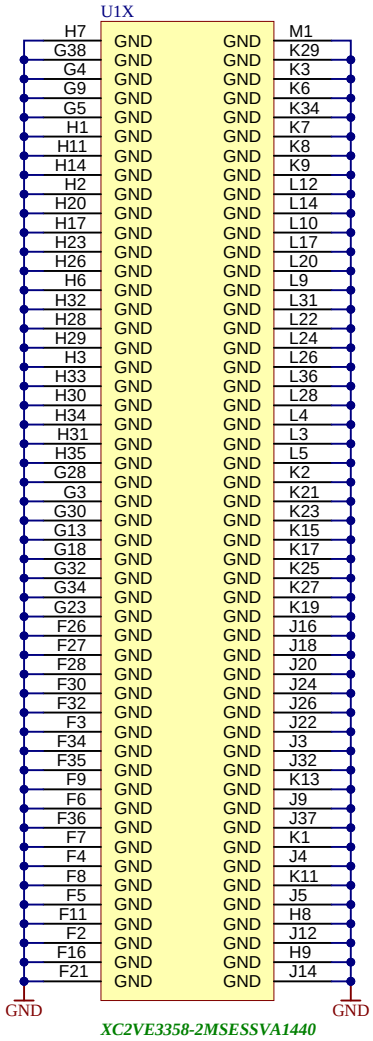

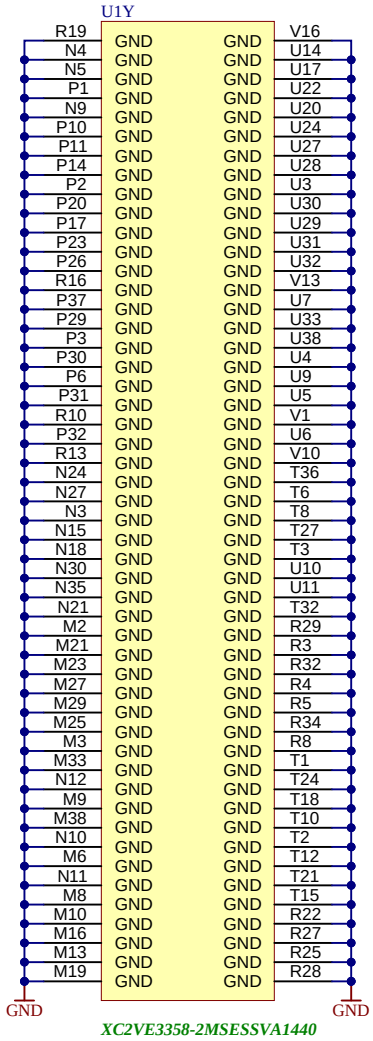

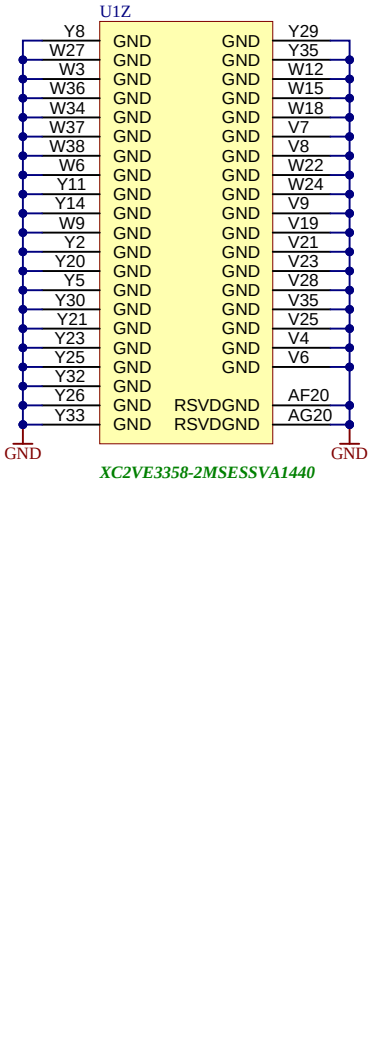

Title: TE0960 – VERSAL GND 2		
A4	Number: TE0960 GCME74A	Rev. 01
Date: 18.09.2026	Copyright: Trenz Electronic GmbH	Page 23 of 55
Filename: VERSAL_GND_2.SchDoc		

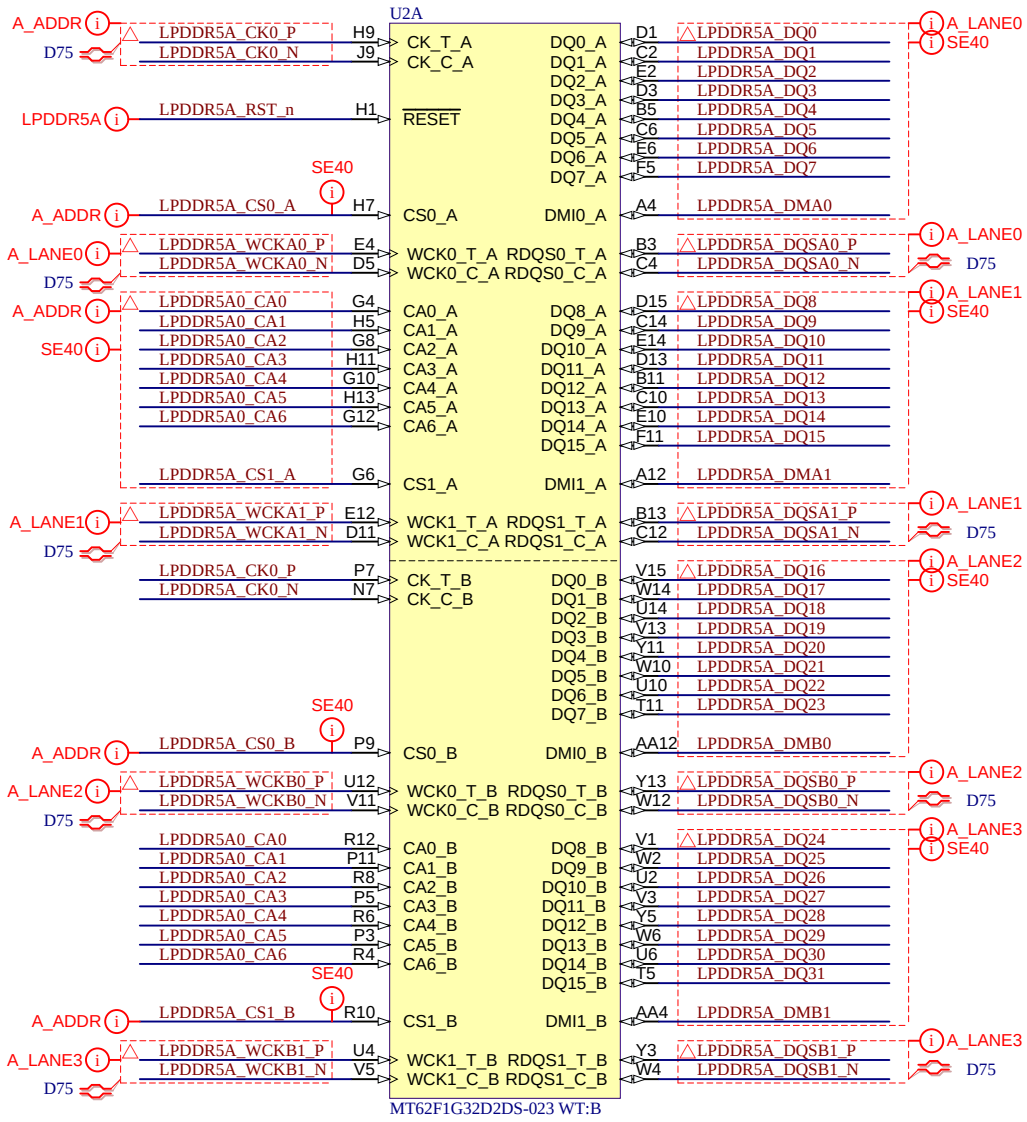

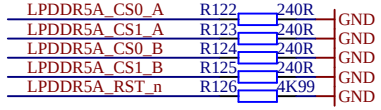

trenz electronic

Title: TE0960 – LPDDR5 RAM 1			
A4	Number: TE0960 GCME74A		Rev. 01
Date: 18.09.2026	Copyright: Trenz Electronic GmbH		Page 24 of 55
Filename: LPDDR5-RAM_1.SchDoc			

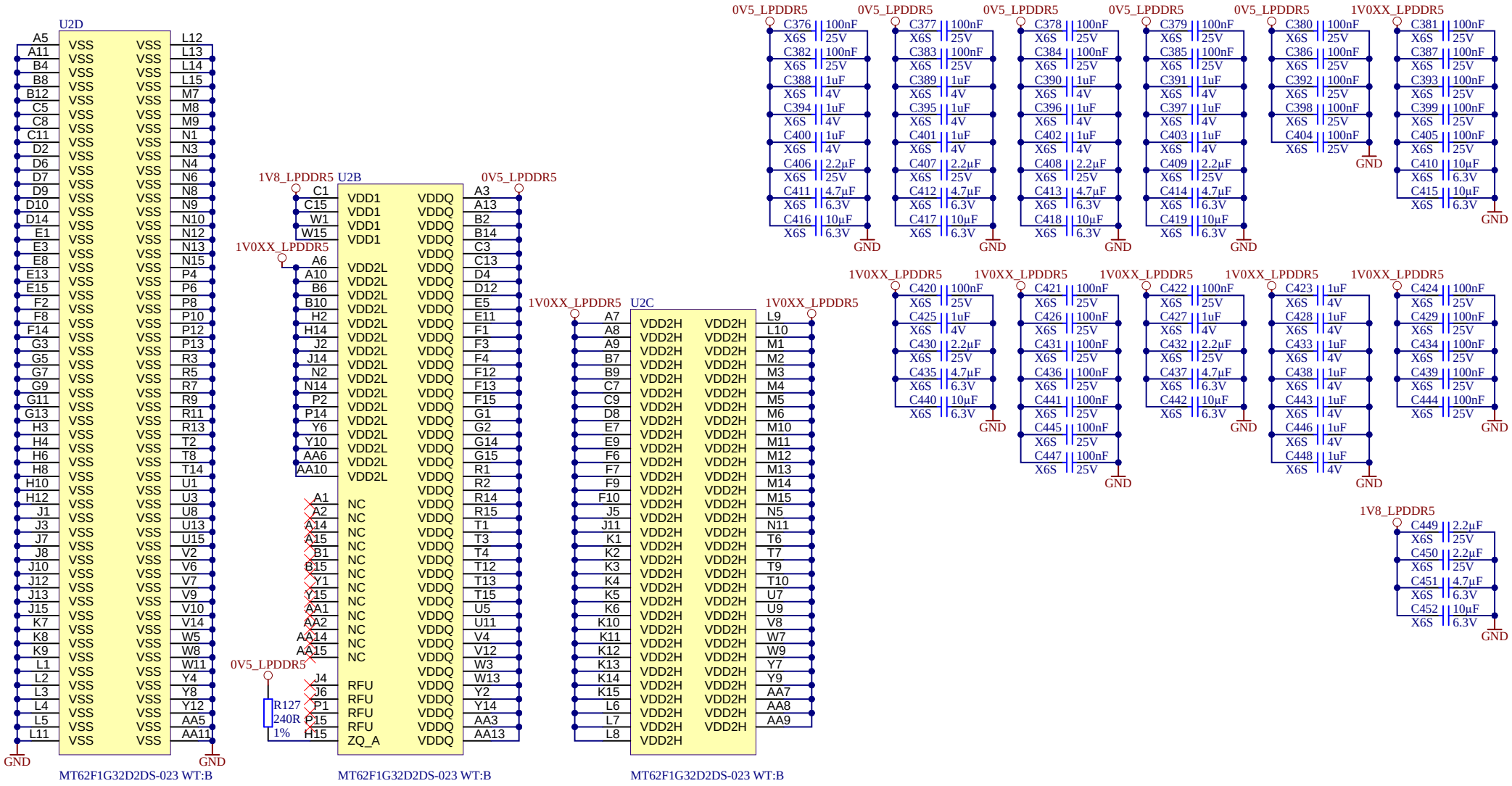

trenz electronic	Title: TE0960 – LPDDR5 RAM 1 PWR		
A4	Number: TE0960 GCME74A		Rev. 01
Date: 18.09.2026	Copyright: Trenz Electronic GmbH		Page 25 of 55
Filename: LPDDR5-RAM_1_PWR.SchDoc			

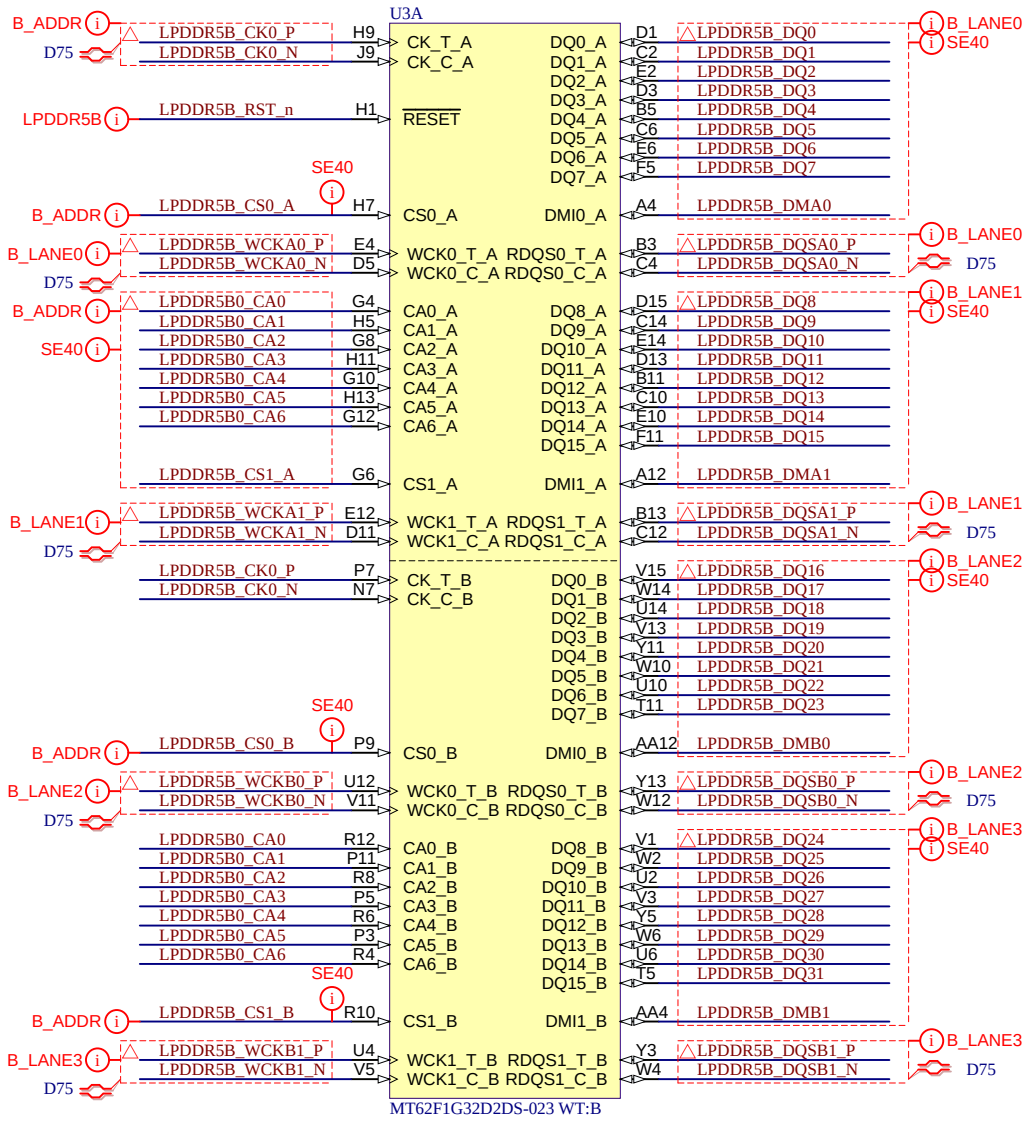

trenz electronic	Title: TE0960 – LPDDR5 RAM 2		
A4	Number: TE0960 GCME74A		Rev. 01
Date: 18.09.2026	Copyright: Trenz Electronic GmbH		Page 26 of 55
Filename: LPDDR5-RAM_2.SchDoc			

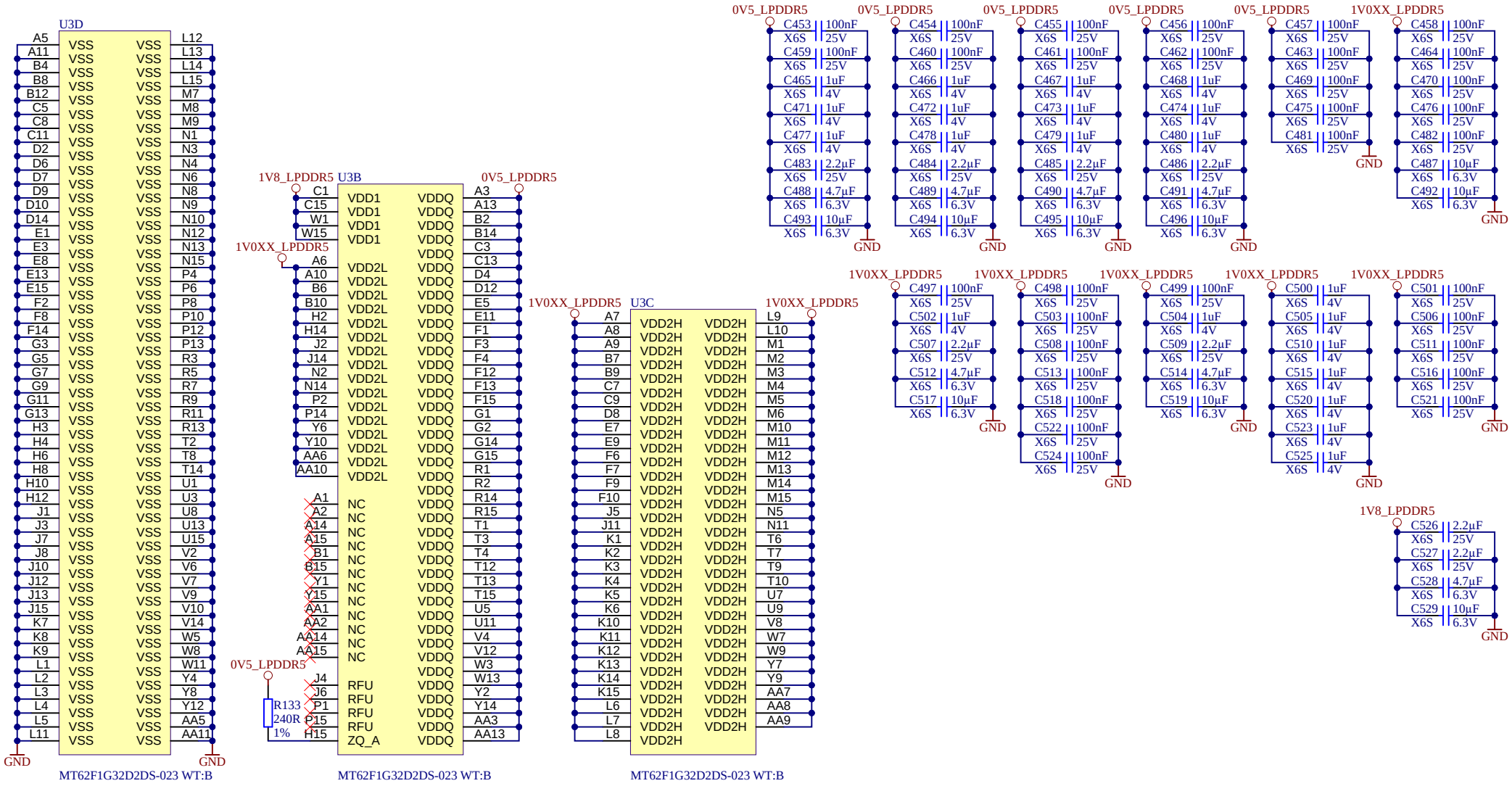

trenz electronic	Title: TE0960 – LPDDR5 RAM 2 PWR	
A4	Number: TE0960 GCME74A	Rev. 01
Date: 18.09.2026	Copyright: Trenz Electronic GmbH	Page 27 of 55
Filename: LPDDR5-RAM_2_PWR.SchDoc		

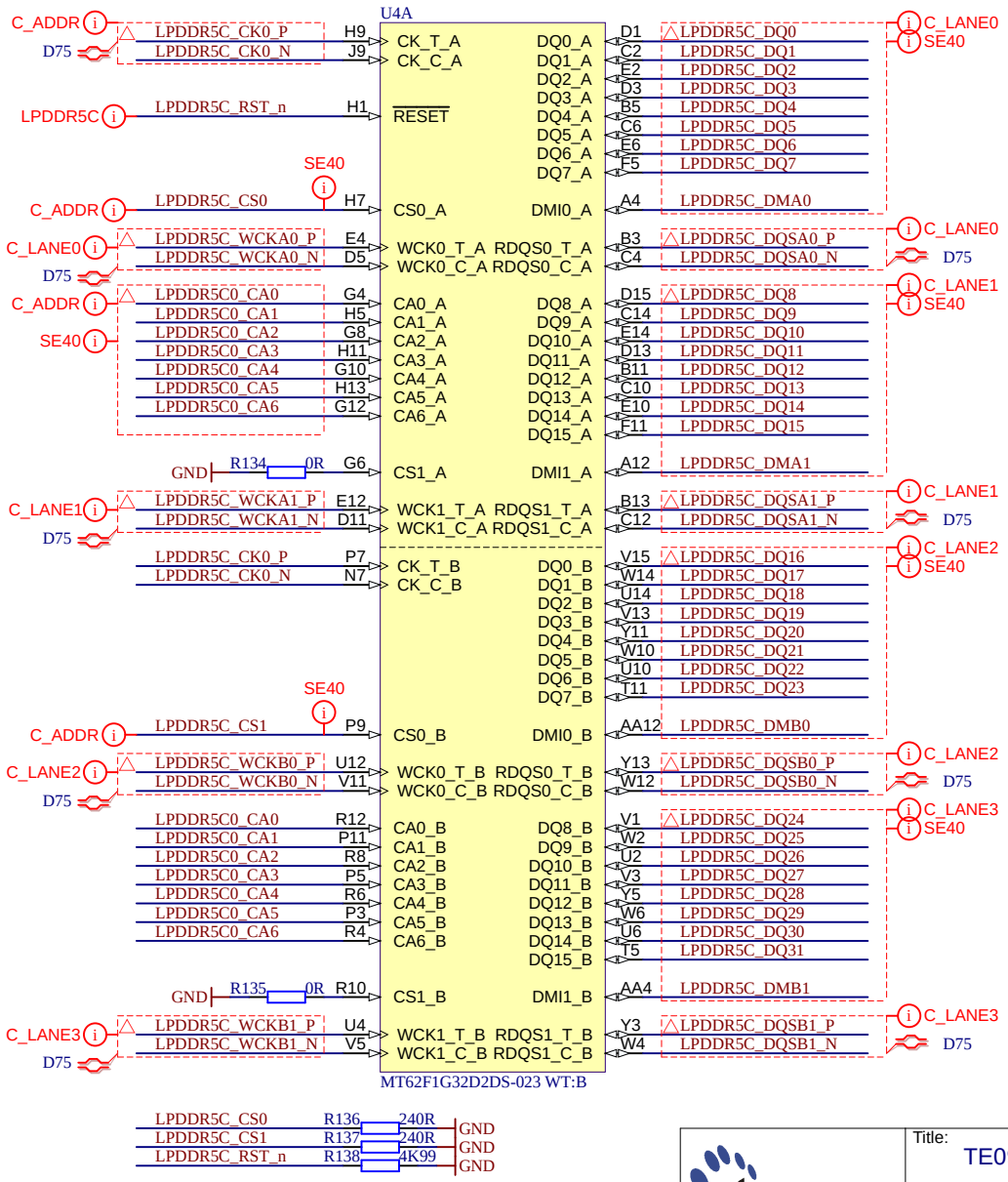

trenz electronic	Title: TE0960 – LPDDR5 RAM 3		
A4	Number: TE0960 GCME74A		Rev. 01
Date: 18.09.2026	Copyright: Trenz Electronic GmbH		Page 28 of 55
Filename: LPDDR5-RAM_3.SchDoc			

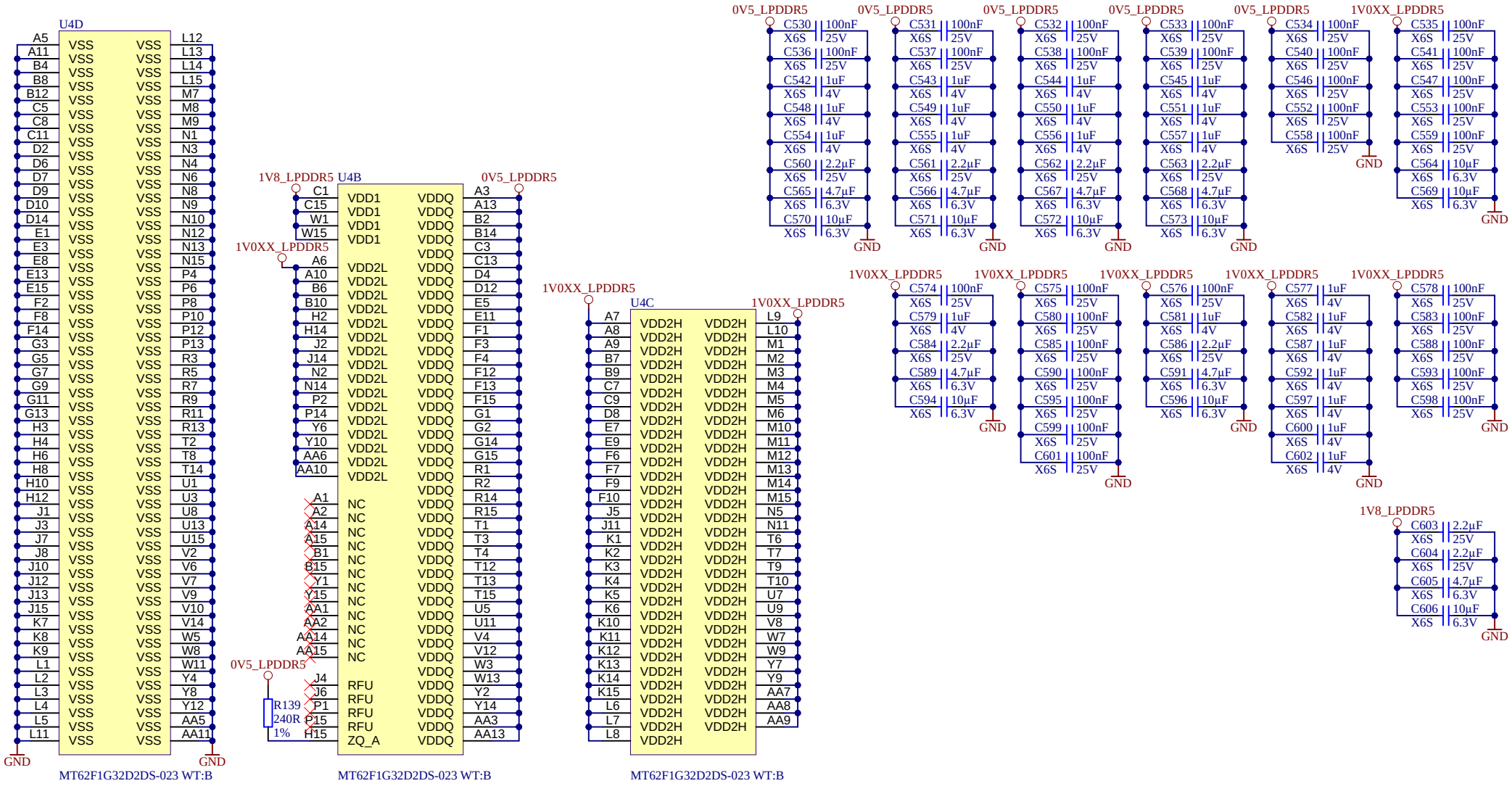

Title: TE0960 – LPDDR5 RAM 3 PWR			
A4	Number: TE0960 GCME74A		Rev. 01
Date: 18.09.2026	Copyright: Trenz Electronic GmbH		Page 29 of 55
Filename: LPDDR5-RAM_3_PWR.SchDoc			

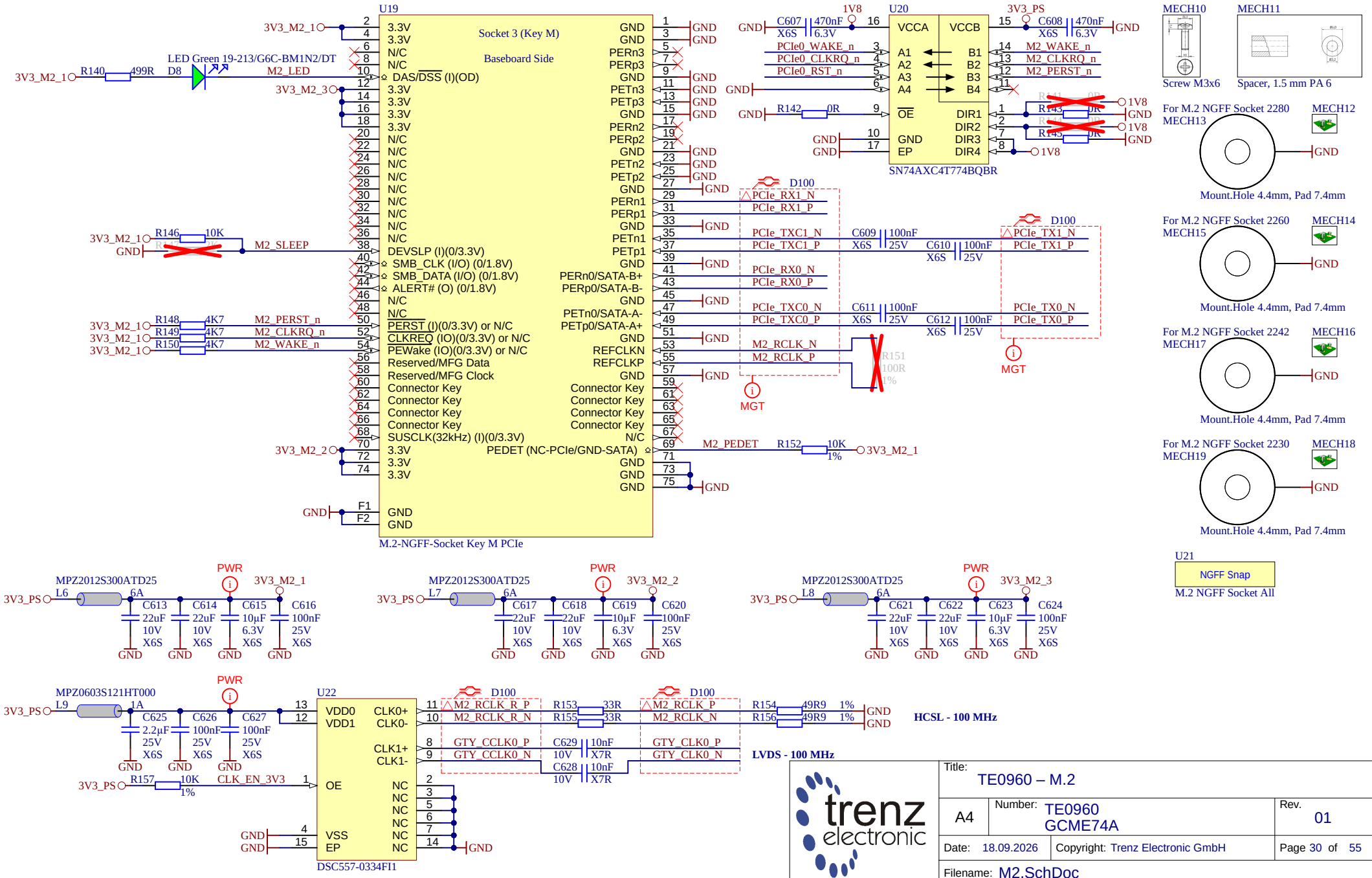

Title:	TE0960 – M.2
A4	Number: TE0960 GCME74A
	Rev. 01
Date: 18.09.2026	Copyright: Trenz Electronic GmbH
	Page 30 of 55
Filename:	M2.SchDoc

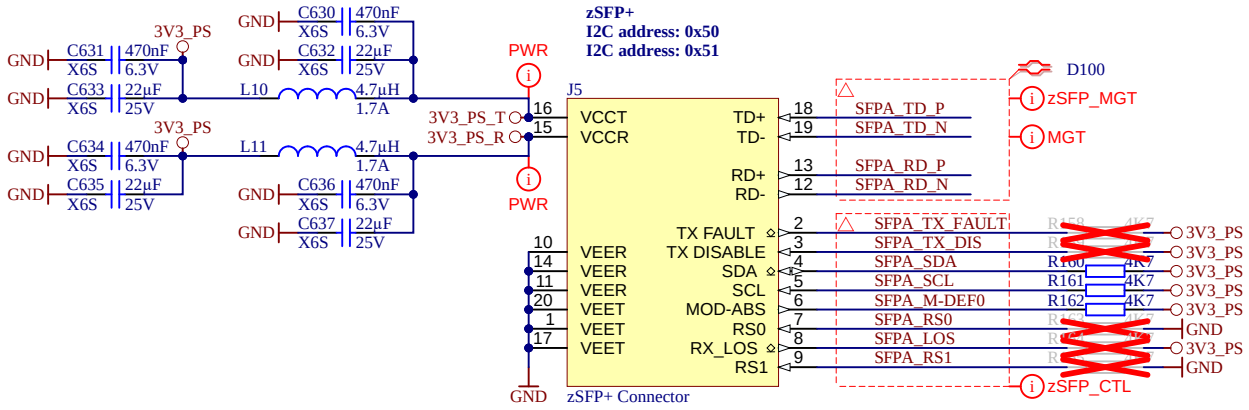

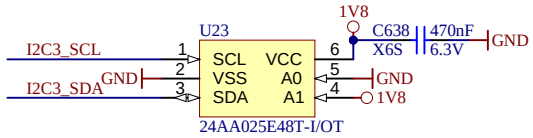

EEPROM for MAC
I2C address: 0x52

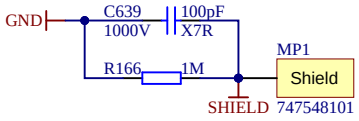

Title: TE0960 – zSFP+			
A4	Number: TE0960 GCME74A		Rev. 01
Date: 09.11.2026	Copyright: Trenz Electronic GmbH		Page 31 of 55
Filename: zSFP+.SchDoc			

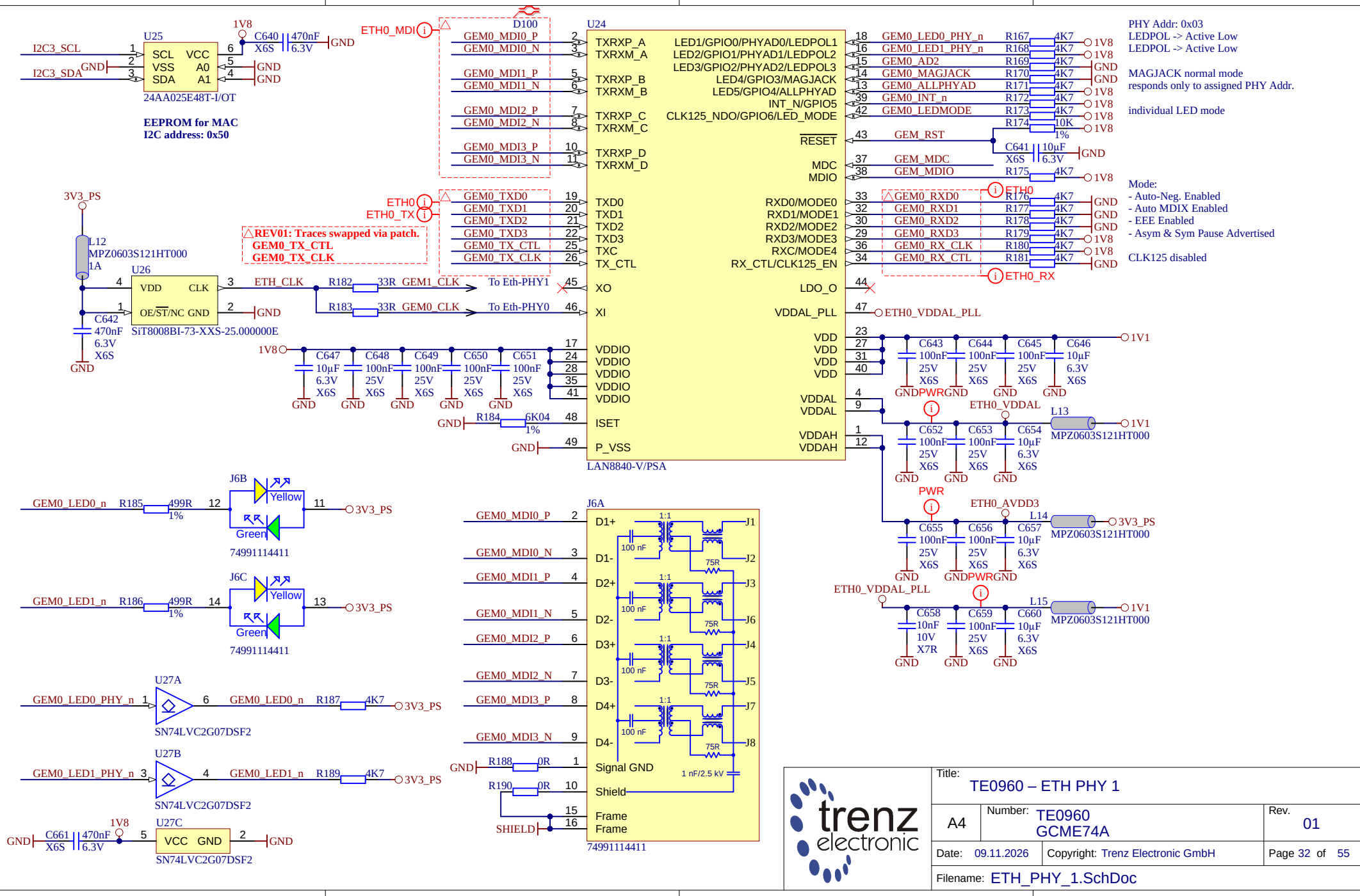
U25
24AA025E48T-I/OT
EEPROM for MAC
I2C address: 0x50
U24
LAN8840-V/PSA
D100
U26
SiT8008BI-73-XXS-25.000000E
L12
MPZ0603S121HT000
REV01: Traces swapped via patch.
GEM0_TX_CTL
GEM0_TX_CLK
PHY Addr: 0x03
LEDPOL -> Active Low
LEDPOL -> Active Low
MAGJACK normal mode
responds only to assigned PHY Addr.
individual LED mode
Mode:
- Auto-Neg. Enabled
- Auto MDIX Enabled
- EEE Enabled
- Asym & Sym Pause Advertised
CLK125 disabled
J6A
74991114411
J6B
J6C
U27A
U27B
U27C
SN74LVC2G07DSF2
Title: TE0960 – ETH PHY 1
A4
Number: TE0960 GCME74A
Rev. 01
Date: 09.11.2026
Copyright: Trenz Electronic GmbH
Page 32 of 55
Filename: ETH_PHY_1.SchDoc

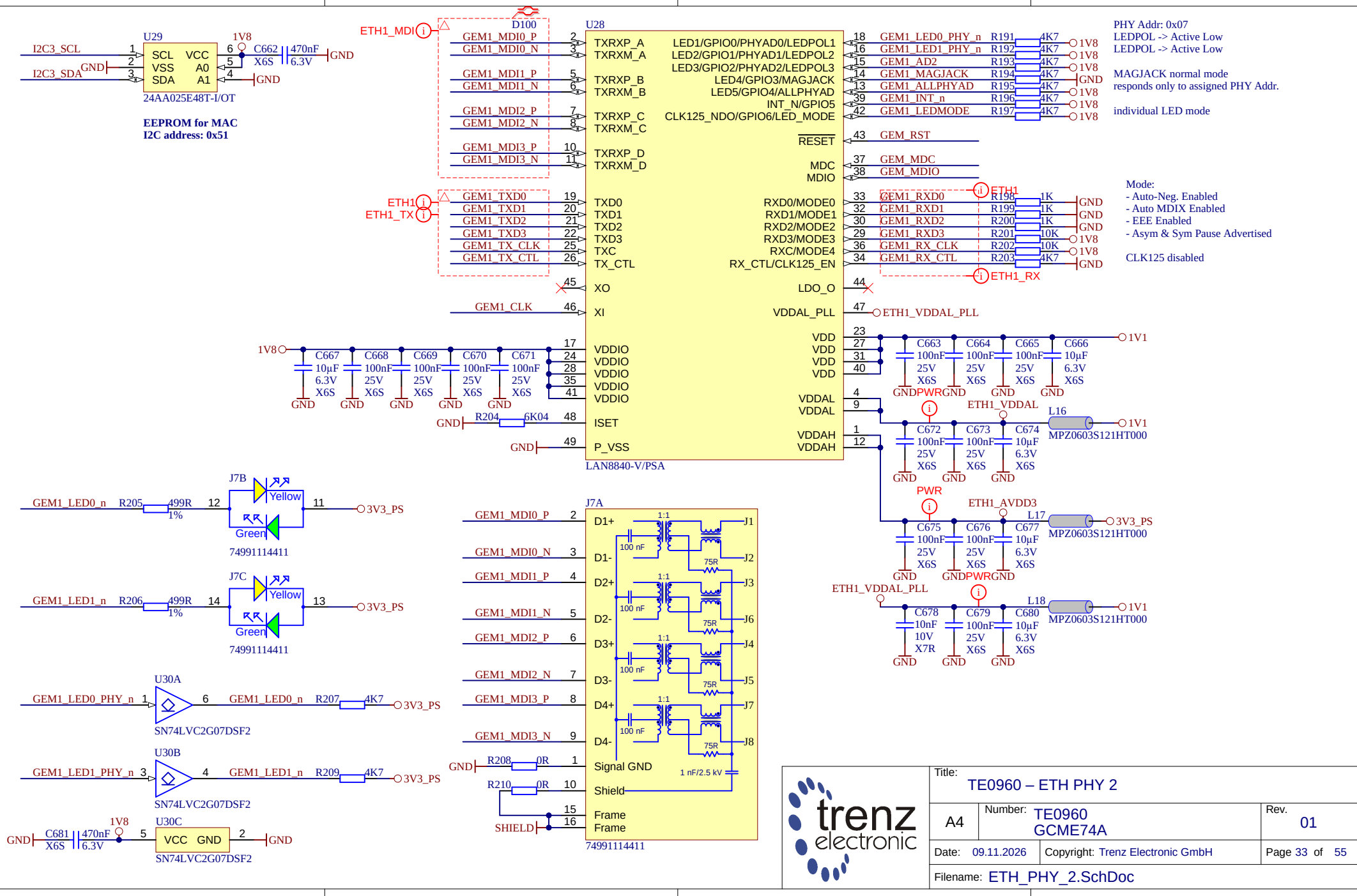
U29
24AA025E48T-I/OT
EEPROM for MAC
I2C address: 0x51
U28
LAN8840-V/PSA
PHY Addr: 0x07
LEDPOL -> Active Low
LEDPOL -> Active Low
MAGJACK normal mode
responds only to assigned PHY Addr.
individual LED mode
Mode:
- Auto-Neg. Enabled
- Auto MDIX Enabled
- EEE Enabled
- Asym & Sym Pause Advertised
CLK125 disabled
J7A
74991114411
J7B
J7C
U30A
U30B
U30C
SN74LVC2G07DSF2
Title: TE0960 – ETH PHY 2
A4
Number: TE0960 GCME74A
Rev. 01
Date: 09.11.2026
Copyright: Trenz Electronic GmbH
Page 33 of 55
Filename: ETH_PHY_2.SchDoc

	USB3320	USB3340
L19	Ferrite Bead	DNP
L20	Ferrite Bead	DNP
C684	4.7 uF	1.0 uF
C685	0.47 uF	1.0 uF
C686	0.47 uF	1.0 uF

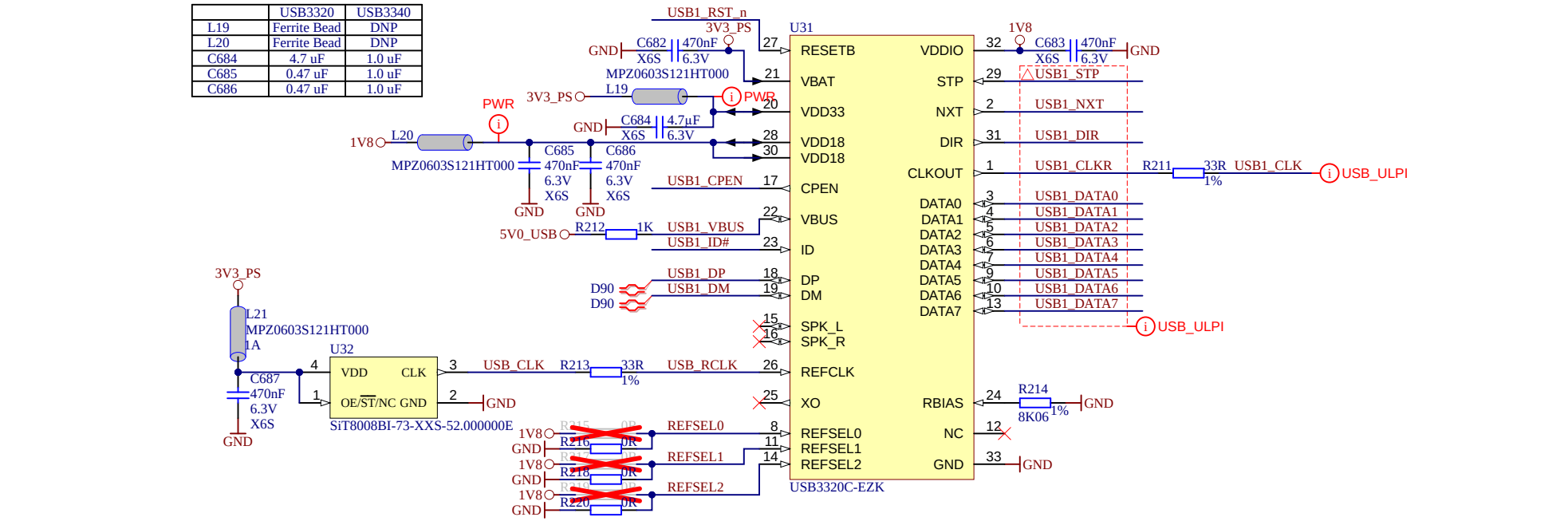

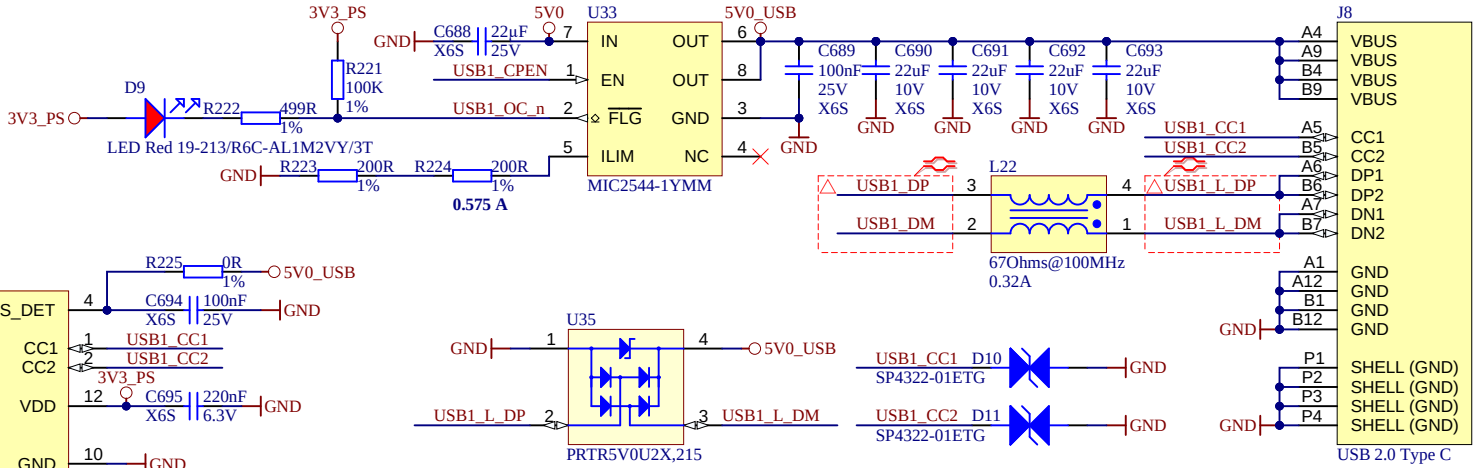

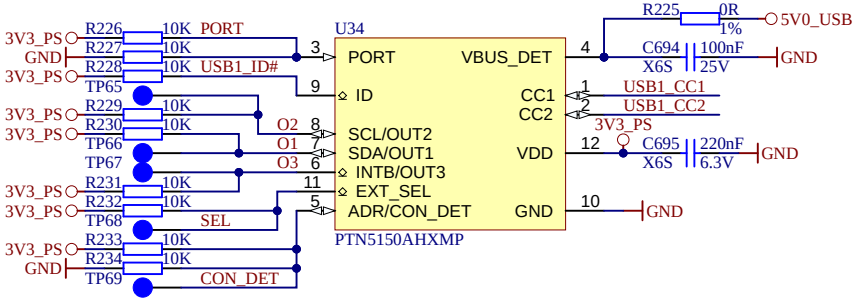

trenz electronic

Title: TE0960 – USB_PHY		
A4	Number: TE0960 GCME74A	Rev. 01
Date: 18.09.2026	Copyright: Trenz Electronic GmbH	Page 34 of 55
Filename: USB_PHY.SchDoc		

CRUVI GTX - MGT

GTX_HS signals only available for variants with Versal XC2VE35XX!

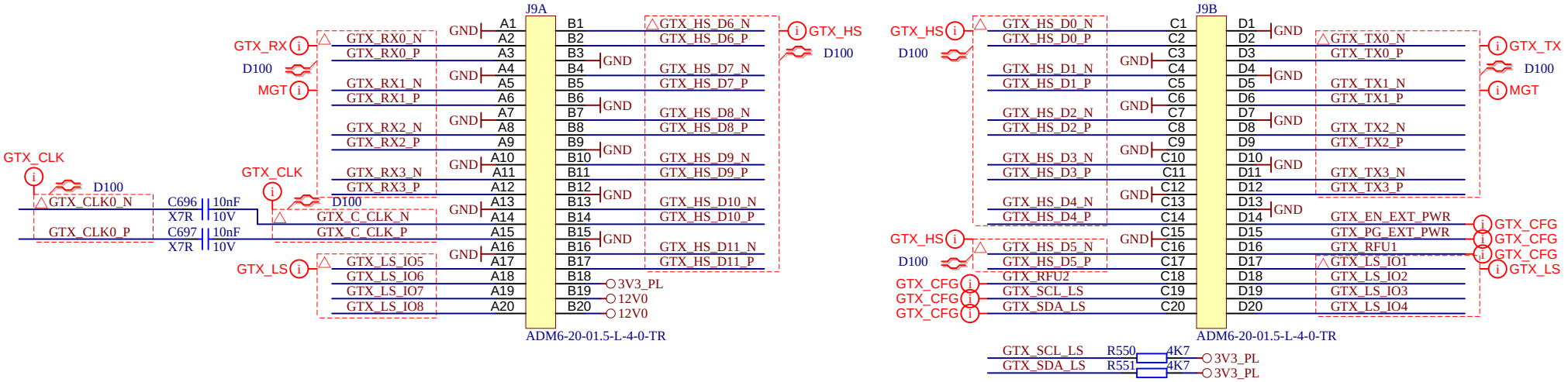

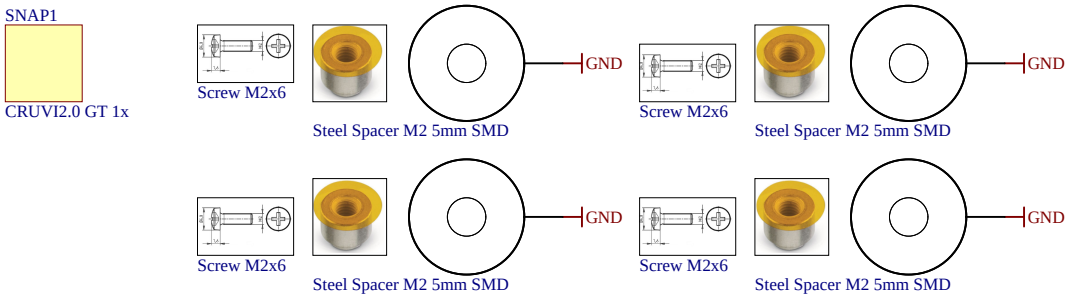

trenz electronic	Title: TE0960 – CRUVI MGT		
	A4	Number: TE0960 GCME74A	Rev. 01
	Date: 18.09.2026	Copyright: Trenz Electronic GmbH	Page 35 of 55
	Filename: CRUVI_GTX_MGT.SchDoc		

CRUVI GT - HS

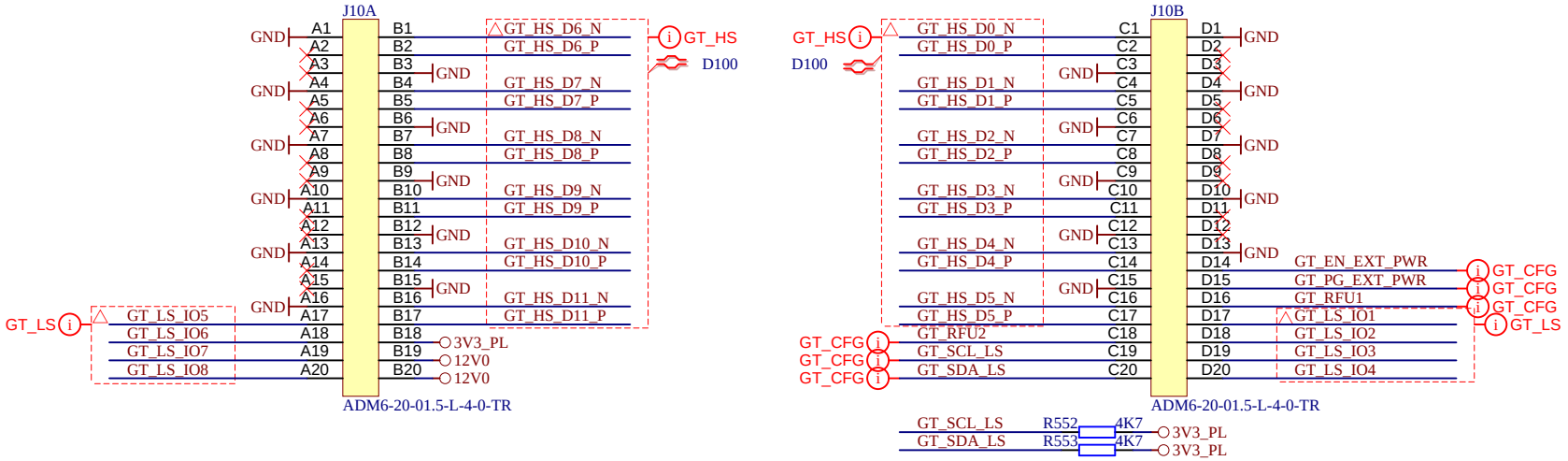

SNAP2

CRUVI2.0 GT 1x

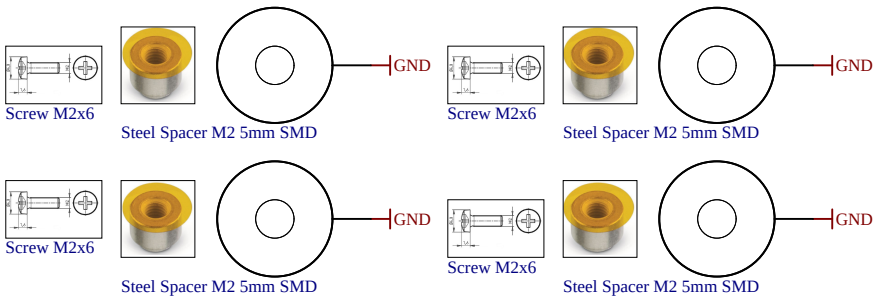

trenz electronic

Title: TE0960 – CRUVI HS		
A4	Number: TE0960 GCME74A	Rev. 01
Date: 18.09.2026	Copyright: Trenz Electronic GmbH	Page 36 of 55
Filename: CRUVI_GT_HS.SchDoc		

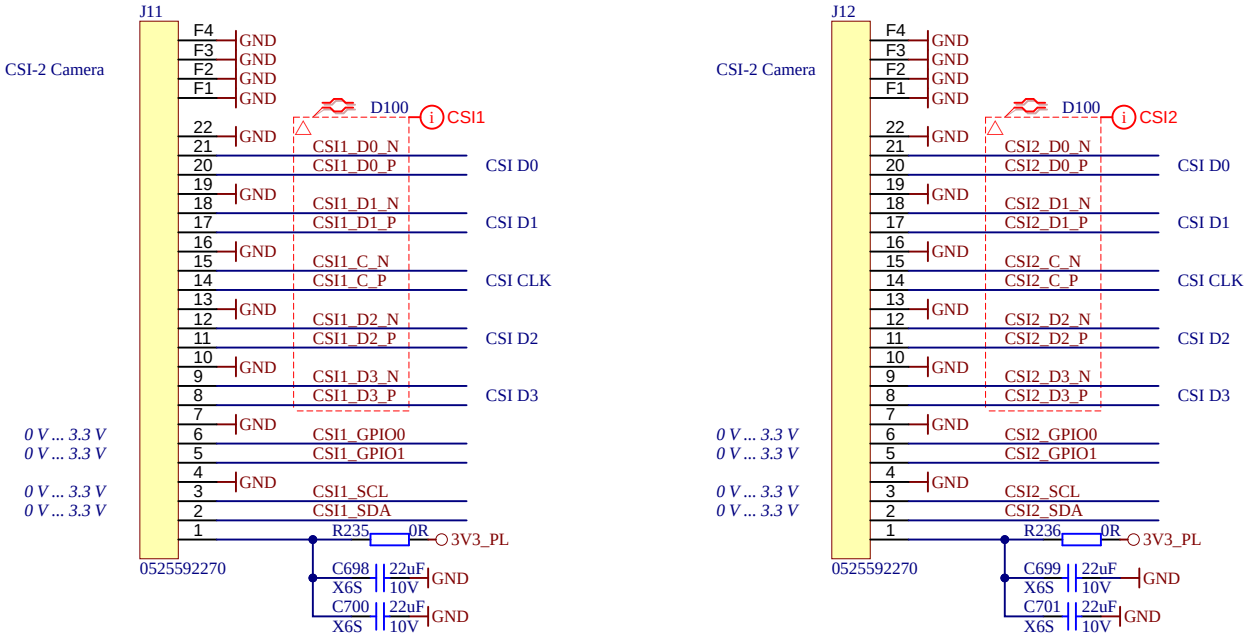

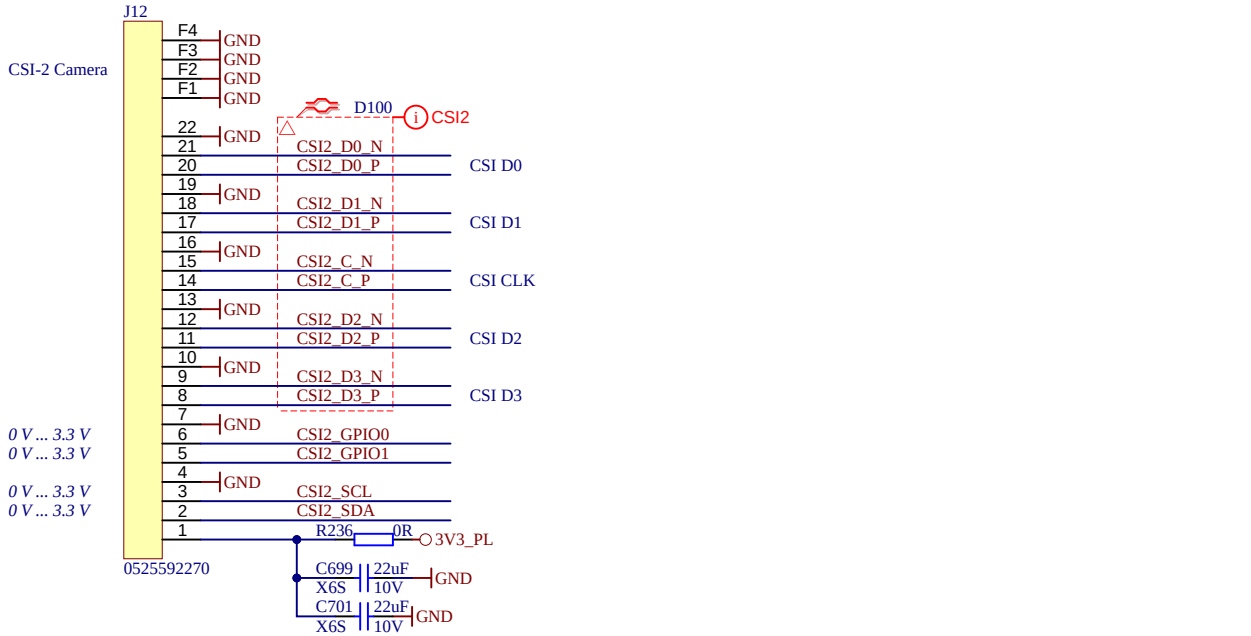

Only available for variants with Versal XC2VE35XX!

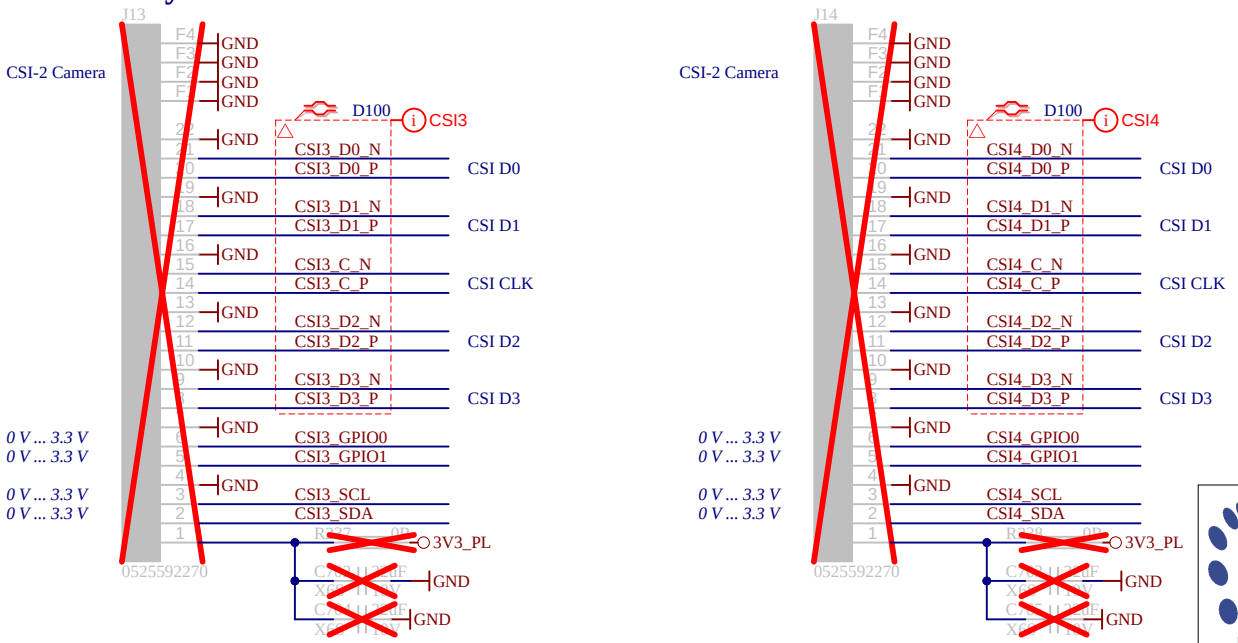

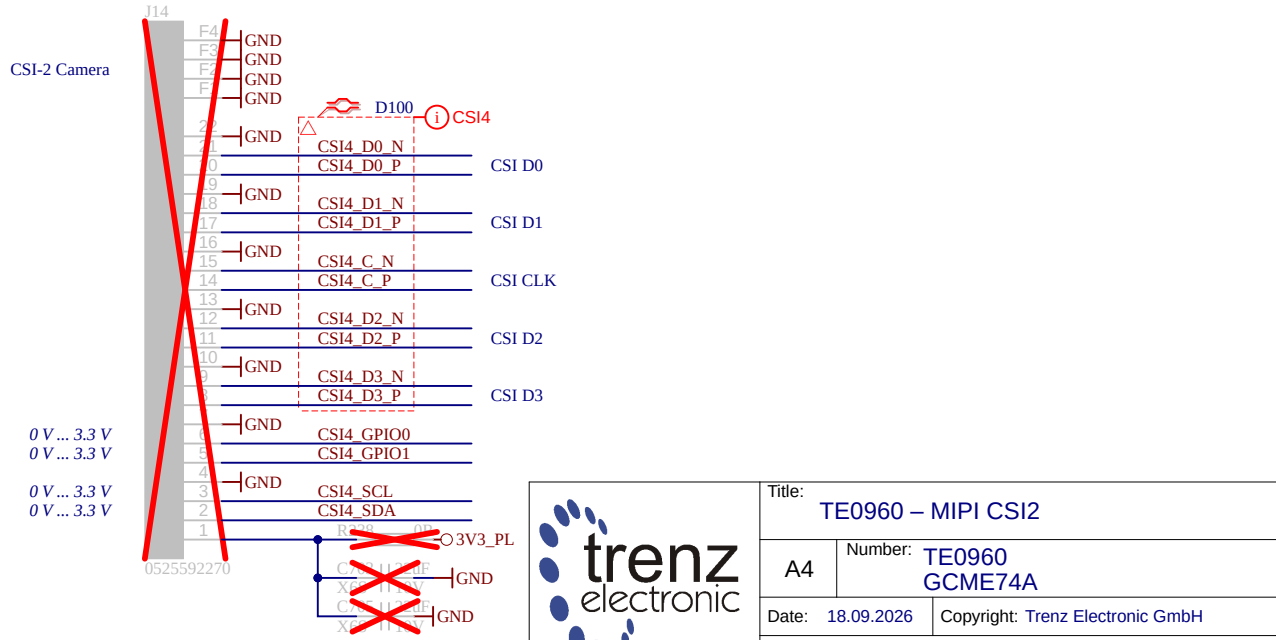

trenz electronic

Title: TE0960 – MIPI CSI2			
A4	Number: TE0960 GCME74A		Rev. 01
Date: 18.09.2026	Copyright: Trenz Electronic GmbH		Page 37 of 55
Filename: MIPI_CSI2.SchDoc			

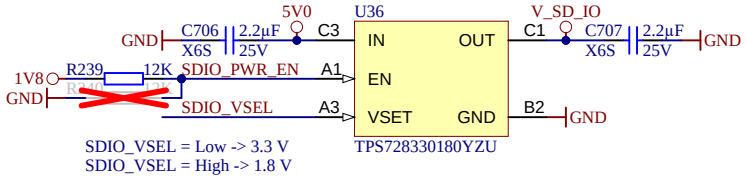

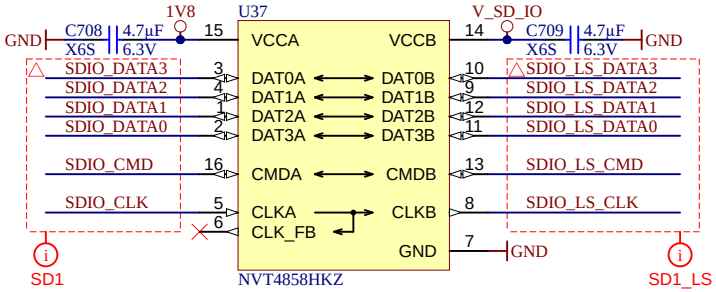

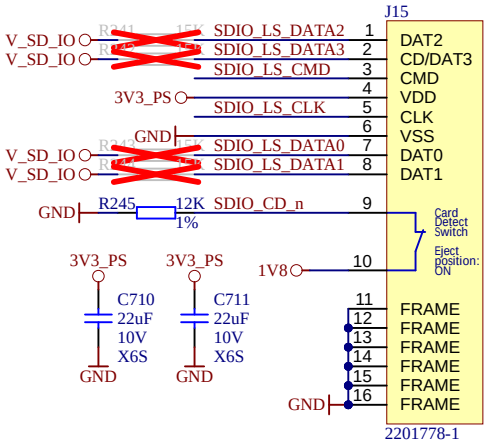

trenz electronic

Title: TE0960 – SD		
A4	Number: TE0960 GCME74A	Rev. 01
Date: 18.09.2026	Copyright: Trenz Electronic GmbH	Page 38 of 55
Filename: SD.SchDoc		

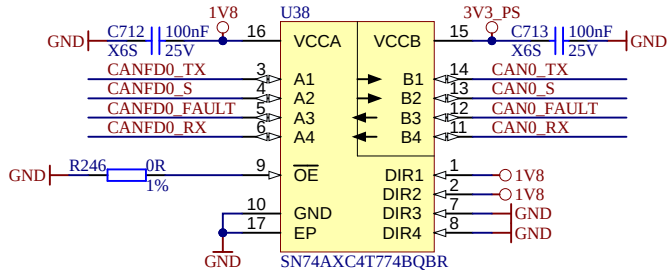

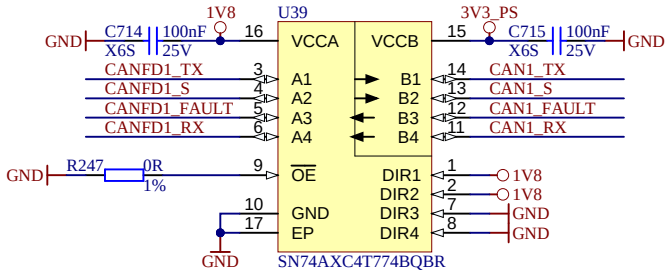

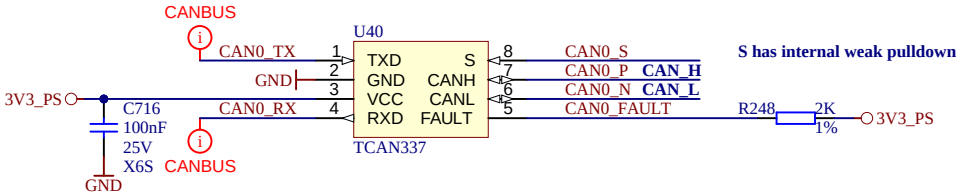

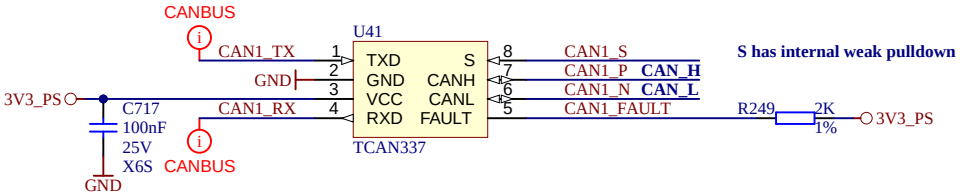

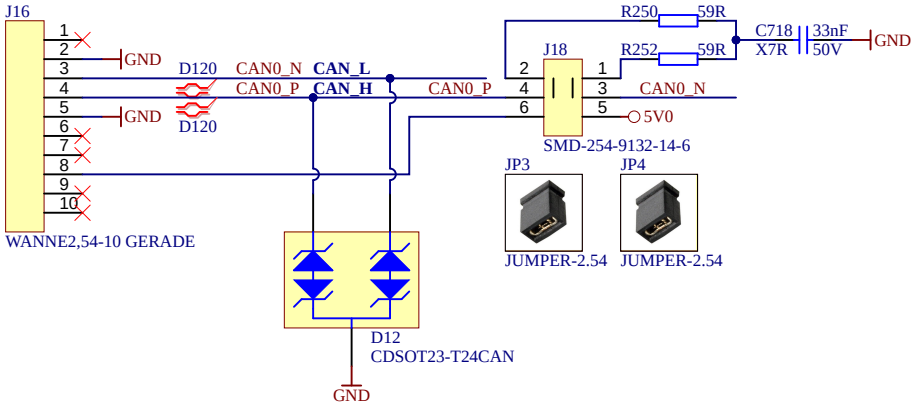

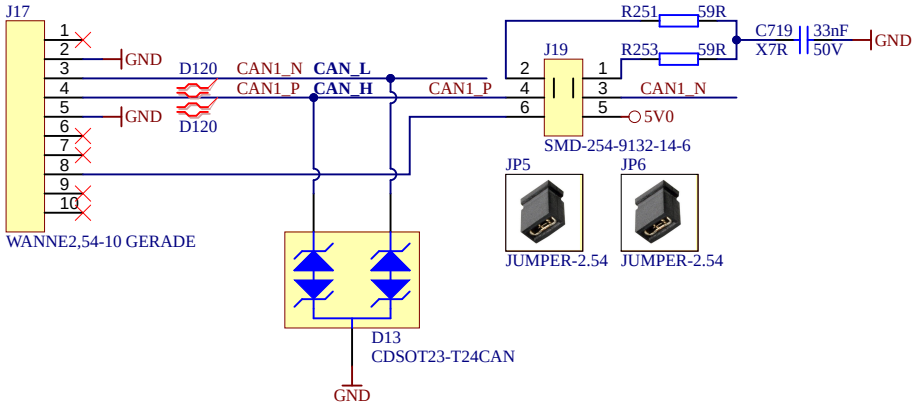

trenz electronic

Title: TE0960 – CAN			
A4	Number: TE0960 GCME74A		Rev. 01
Date: 18.09.2026	Copyright: Trenz Electronic GmbH		Page 39 of 55
Filename: CAN.SchDoc			

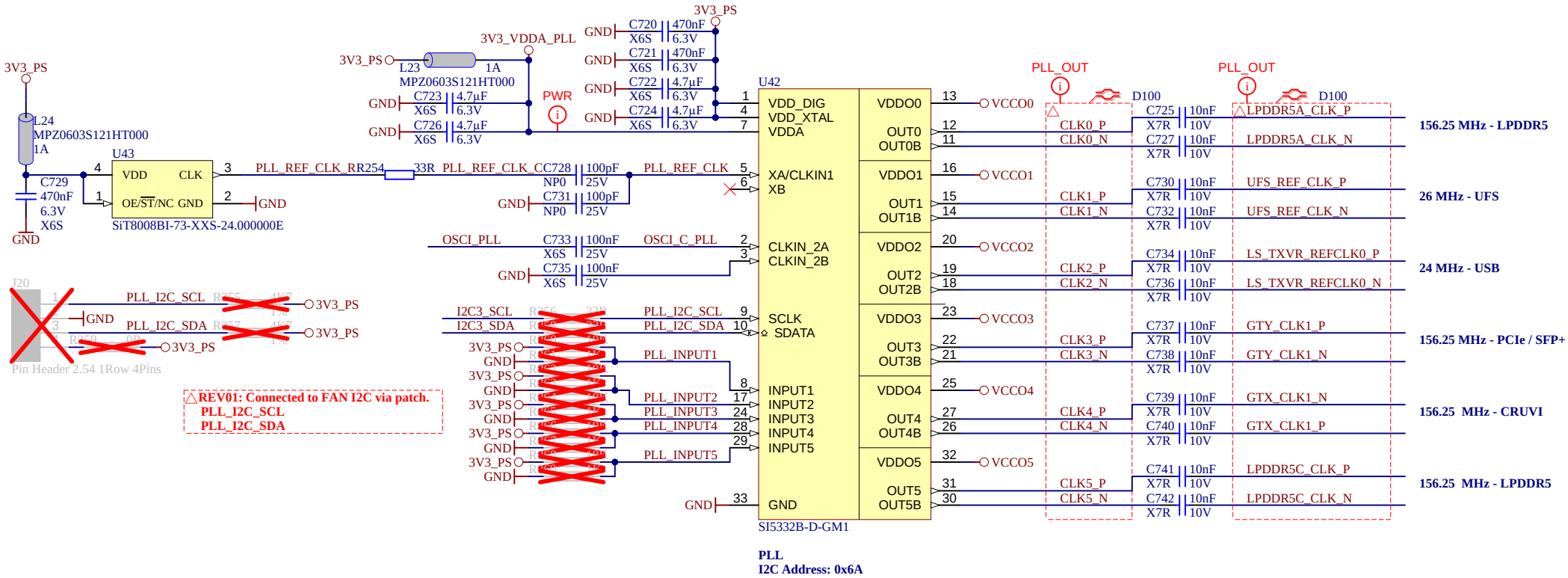

Title: TE0960 – PLL			
A4	Number: TE0960 GCME74A		Rev. 01
Date: 09.11.2026	Copyright: Trenz Electronic GmbH		Page 40 of 55
Filename: PLL.SchDoc			

Only available for variants with Versal XC2VE35XX!

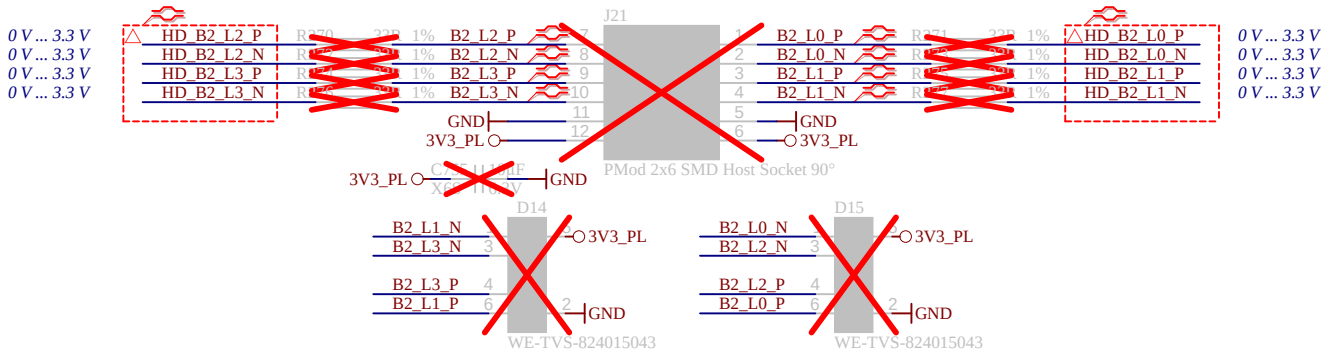

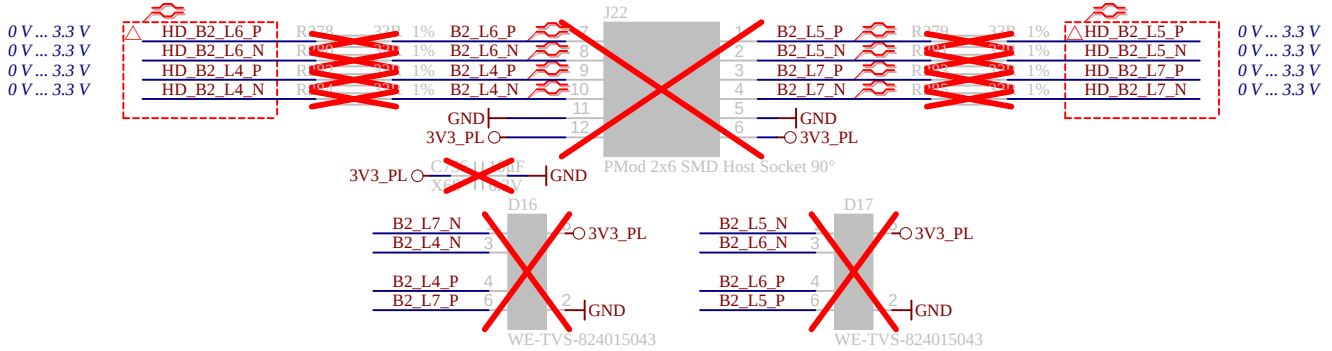

trenz electronic	Title: TE0960 – Pmod		
A4	Number: TE0960 GCME74A		Rev. 01
Date: 18.09.2026	Copyright: Trenz Electronic GmbH		Page 41 of 55
Filename: Pmod.SchDoc			

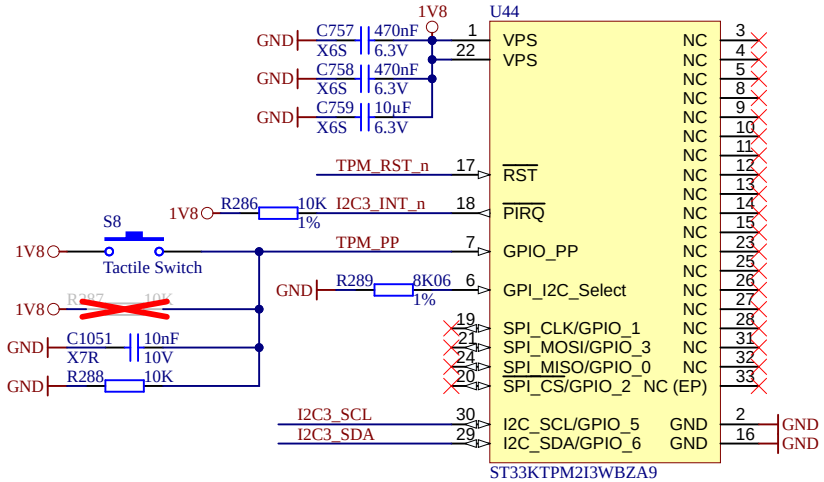

TPM
I2C address: 0x2E

trenz electronic	Title: TE0960 – TPM		
	A4	Number: TE0960 GCME74A	Rev. 01
	Date: 09.11.2026	Copyright: Trenz Electronic GmbH	Page 42 of 55
	Filename: TPM.SchDoc		

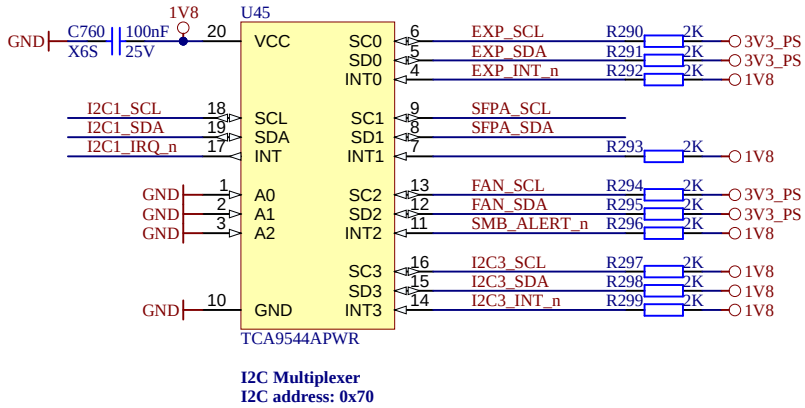

I2C Multiplexer
I2C address: 0x70

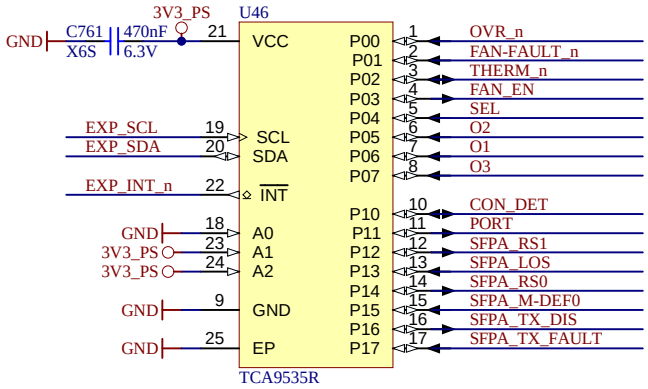

I2C IO Expander
I2C address: 0x26

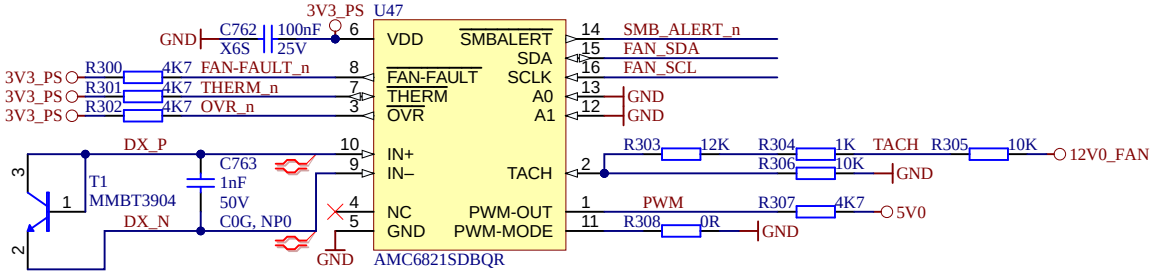

Temperature Monitor and Fan Controller
I2C address: 0x18

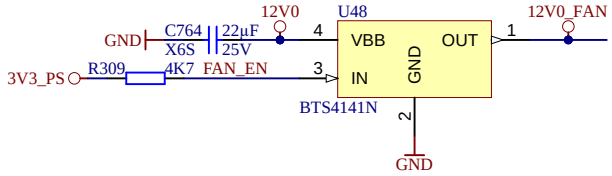



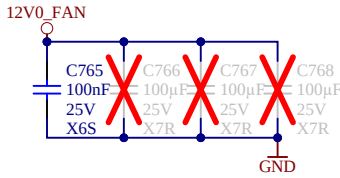

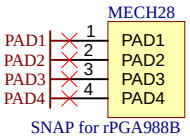

trenz electronic

Title: TE0960 – FAN			
A4	Number: TE0960 GCME74A		Rev. 01
Date: 09.11.2026	Copyright: Trenz Electronic GmbH		Page 43 of 55
Filename: FAN.SchDoc			

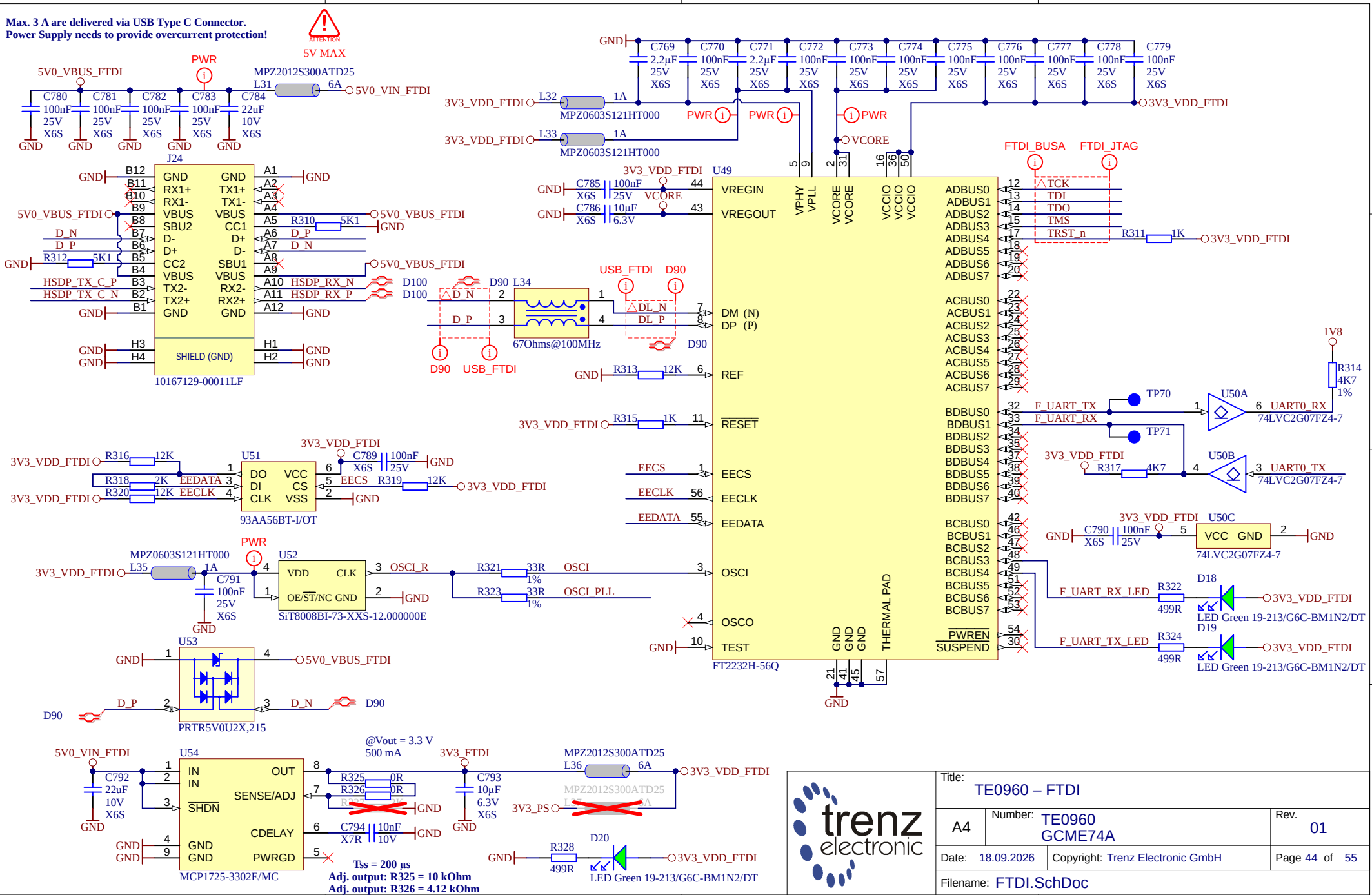
Max. 3 A are delivered via USB Type C Connector.
Power Supply needs to provide overcurrent protection!
ATTENTION
5V MAX
5V0_VBUS_FTDI
PWR
MPZ2012S300ATD25
L31
6A
5V0_VIN_FTDI
C780 100nF 25V X6S
C781 100nF 25V X6S
C782 100nF 25V X6S
C783 100nF 25V X6S
C784 22uF 10V X6S
GND
J24
10167129-00011LF
SHIELD (GND)
D_N
D_P
HSDP_TX_C_P
HSDP_TX_C_N
HSDP_RX_N
HSDP_RX_P
R310 5K1
R312 5K1
D100
3V3_VDD_FTDI
L32 1A MPZ0603S121HT000
L33 1A MPZ0603S121HT000
C769 2.2µF 25V X6S
C770 100nF 25V X6S
C771 2.2µF 25V X6S
C772 100nF 25V X6S
C773 100nF 25V X6S
C774 100nF 25V X6S
C775 100nF 25V X6S
C776 100nF 25V X6S
C777 100nF 25V X6S
C778 100nF 25V X6S
C779 100nF 25V X6S
VCORE
U49
FT2232H-56Q
VREGIN
VREGOUT
C785 100nF X6S 25V
C786 10µF X6S 6.3V
DM (N)
DP (P)
REF
RESET
EECS
EECLK
EEDATA
OSCI
OSCO
TEST
VPHY
VPLL
VCORE
VCCIO
THERMAL PAD
ADBUS0
ADBUS1
ADBUS2
ADBUS3
ADBUS4
ADBUS5
ADBUS6
ADBUS7
ACBUS0
ACBUS1
ACBUS2
ACBUS3
ACBUS4
ACBUS5
ACBUS6
ACBUS7
BDBUS0
BDBUS1
BDBUS2
BDBUS3
BDBUS4
BDBUS5
BDBUS6
BDBUS7
BCBUS0
BCBUS1
BCBUS2
BCBUS3
BCBUS4
BCBUS5
BCBUS6
BCBUS7
PWREN
SUSPEND
FTDI_BUSA
FTDI_JTAG
TCK
TDI
TDO
TMS
TRST_n
R311 1K
USB_FTDI
DL_N
DL_P
67Ohms@100MHz
R313 12K
R315 1K
1V8
R314 4K7 1%
TP70
TP71
F_UART_TX
F_UART_RX
U50A
U50B
U50C
74LVC2G07FZ4-7
UART0_RX
UART0_TX
R317 4K7
R316 12K
R318 2K
R320 12K
EEDATA
EECLK
U51
93AA56BT-I/OT
R319 12K
C789 100nF X6S 25V
U52
SiT8008BI-73-XXS-12.000000E
MPZ0603S121HT000
L35 1A
C791 100nF 25V X6S
R321 33R 1%
R323 33R 1%
OSCI_R
OSCI_PLL
C790 100nF X6S 25V
U53
PRTR5V0U2X,215
D18
D19
R322 499R
R324 499R
F_UART_RX_LED
F_UART_TX_LED
LED Green 19-213/G6C-BM1N2/DT
U54
MCP1725-3302E/MC
@Vout = 3.3 V
500 mA
3V3_FTDI
3V3_PS
C792 22uF 10V X6S
C793 10µF 6.3V X6S
C794 10nF X7R 10V
R325 0R
R326 0R
SHDN
SENSE/ADJ
CDELAY
PWRGD
Tss = 200 µs
Adj. output: R325 = 10 kOhm
Adj. output: R326 = 4.12 kOhm
D20
R328 499R
trenz electronic
Title: TE0960 – FTDI
A4
Number: TE0960 GCME74A
Rev. 01
Date: 18.09.2026
Copyright: Trenz Electronic GmbH
Page 44 of 55
Filename: FTDI.SchDoc

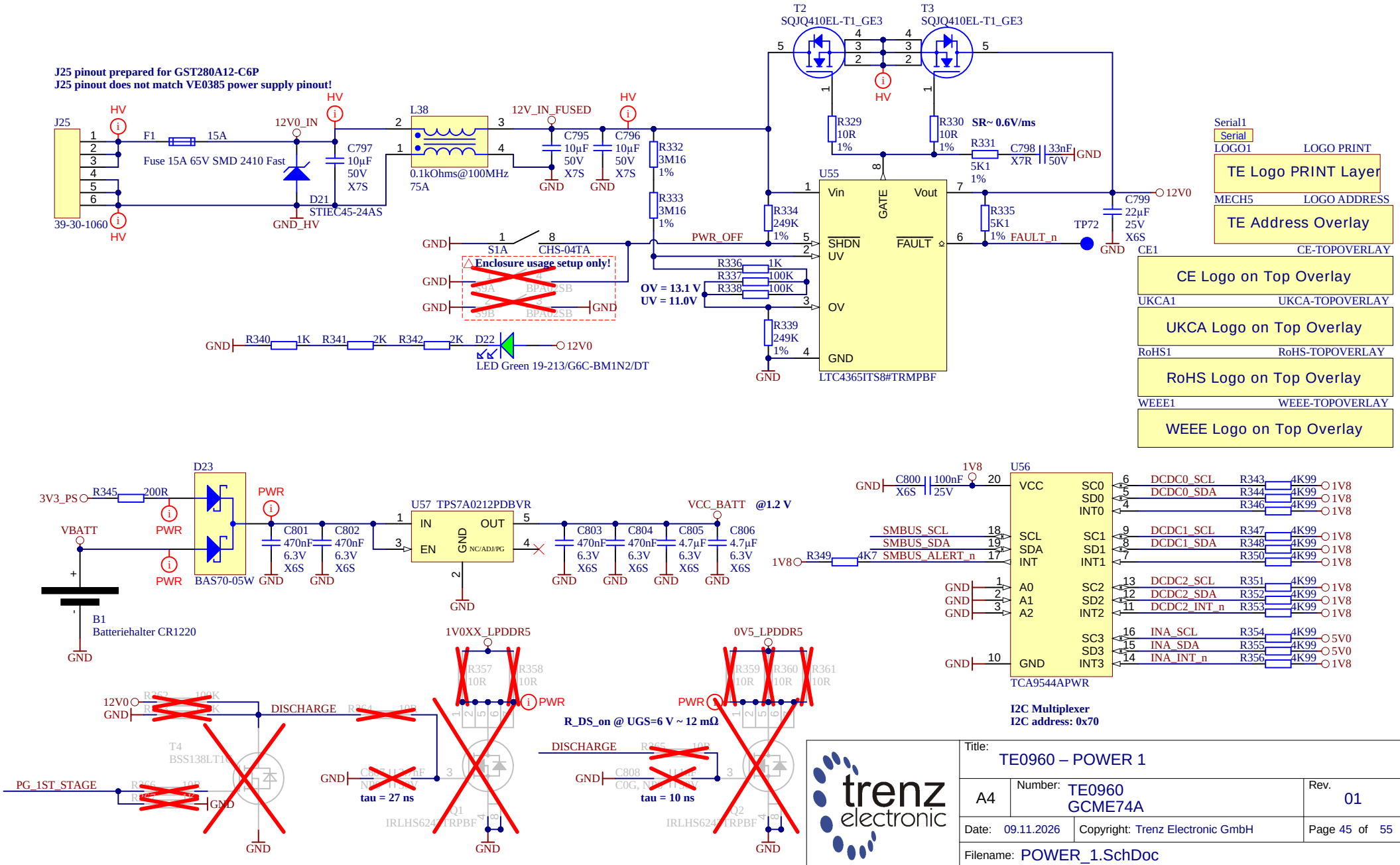

Title: TE0960 – POWER 1			
A4	Number: TE0960 GCME74A		Rev. 01
Date: 09.11.2026	Copyright: Trenz Electronic GmbH		Page 45 of 55
Filename: POWER_1.SchDoc			

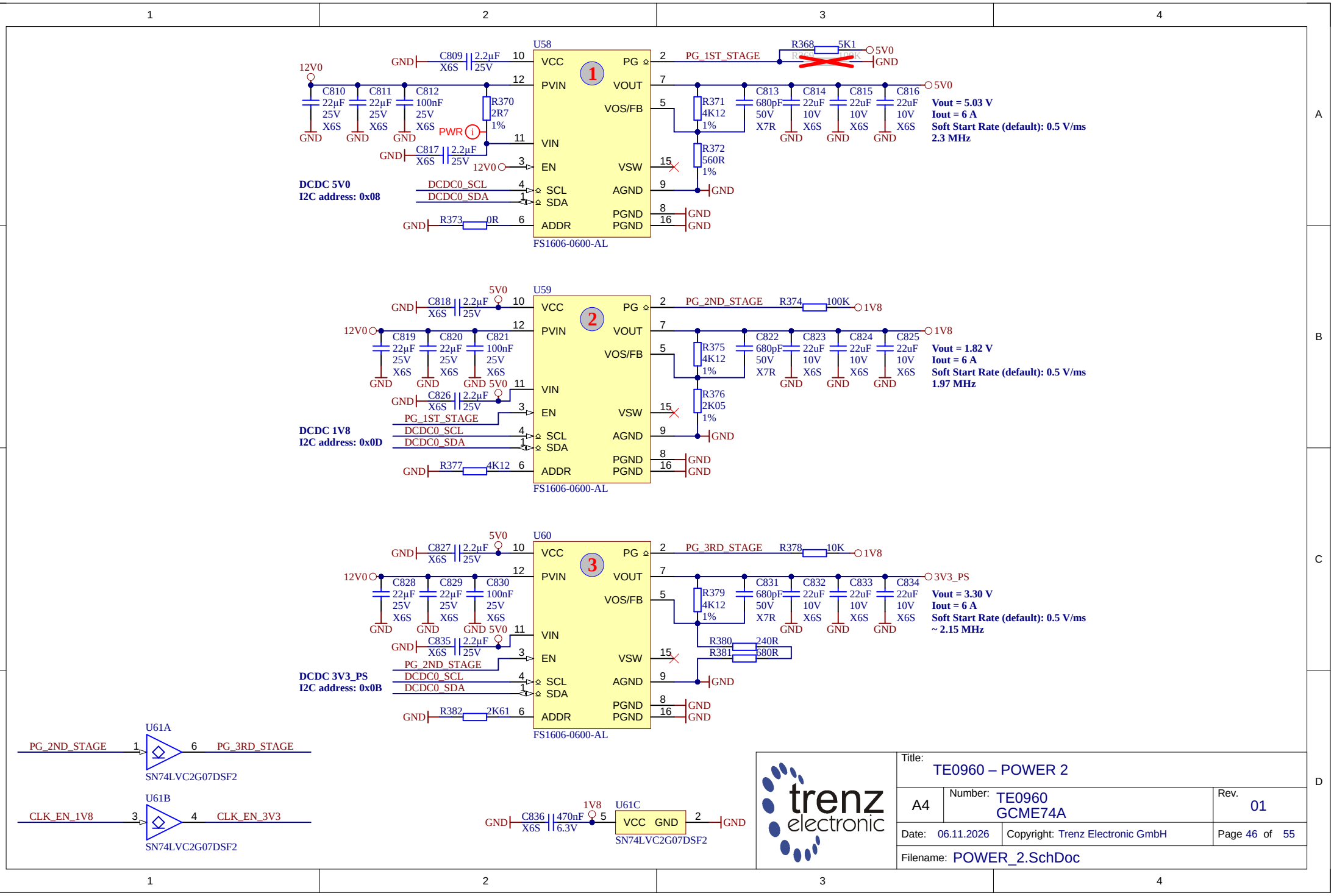
U58
FS1606-0600-AL
DCDC 5V0
I2C address: 0x08
Vout = 5.03 V
Iout = 6 A
Soft Start Rate (default): 0.5 V/ms
2.3 MHz
U59
FS1606-0600-AL
DCDC 1V8
I2C address: 0x0D
Vout = 1.82 V
Iout = 6 A
Soft Start Rate (default): 0.5 V/ms
1.97 MHz
U60
FS1606-0600-AL
DCDC 3V3_PS
I2C address: 0x0B
Vout = 3.30 V
Iout = 6 A
Soft Start Rate (default): 0.5 V/ms
~ 2.15 MHz
U61A
SN74LVC2G07DSF2
U61B
SN74LVC2G07DSF2
U61C
SN74LVC2G07DSF2
Title: TE960 – POWER 2
A4
Number: TE960 GCME74A
Rev. 01
Date: 06.11.2026
Copyright: Trenz Electronic GmbH
Page 46 of 55
Filename: POWER_2.SchDoc

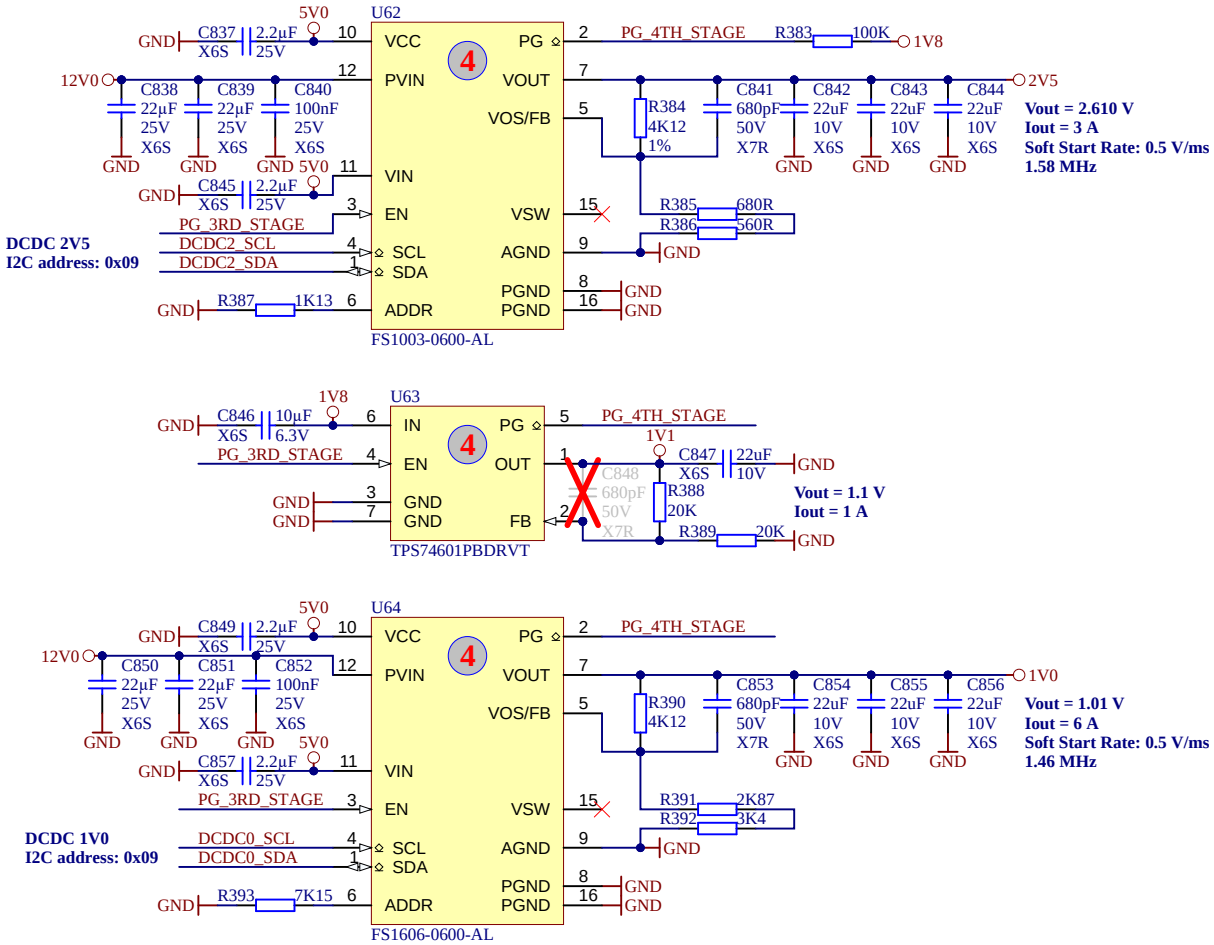

trenz electronic	Title: TE0960 – POWER 3		
A4	Number: TE0960 GCME74A		Rev. 01
Date: 18.09.2026	Copyright: Trenz Electronic GmbH		Page 47 of 55
Filename: POWER_3.SchDoc			

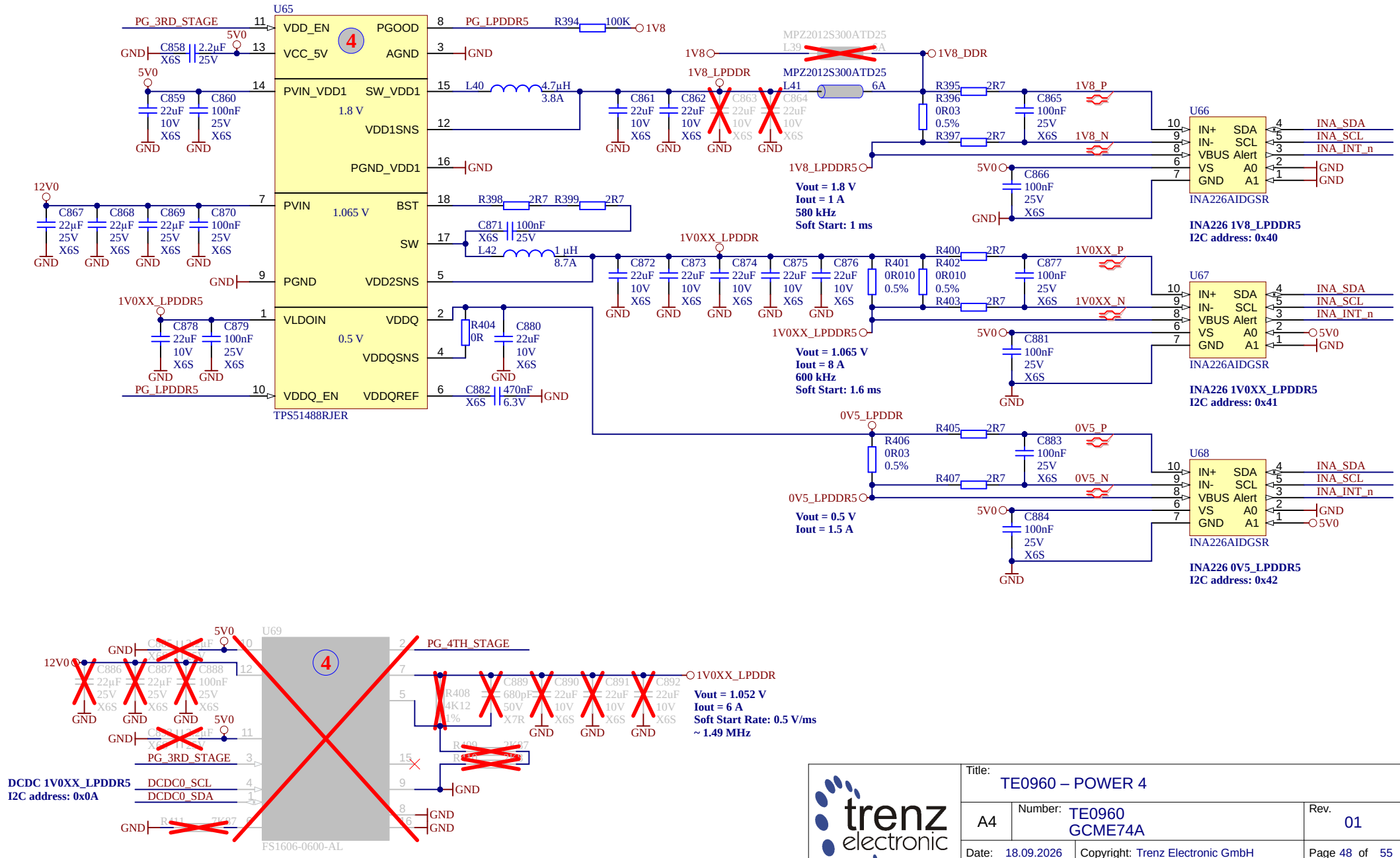

Title: TE0960 – POWER 4			
A4	Number: TE0960 GCME74A		Rev. 01
Date: 18.09.2026	Copyright: Trenz Electronic GmbH		Page 48 of 55
Filename: POWER_4.SchDoc			

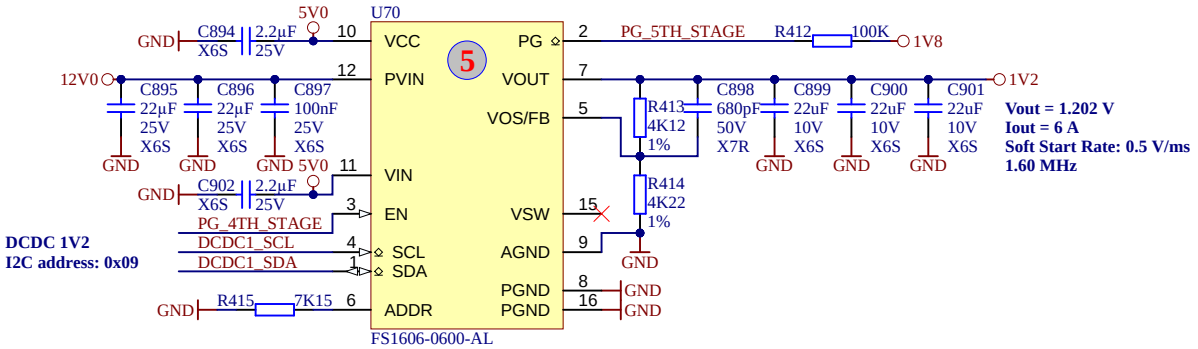

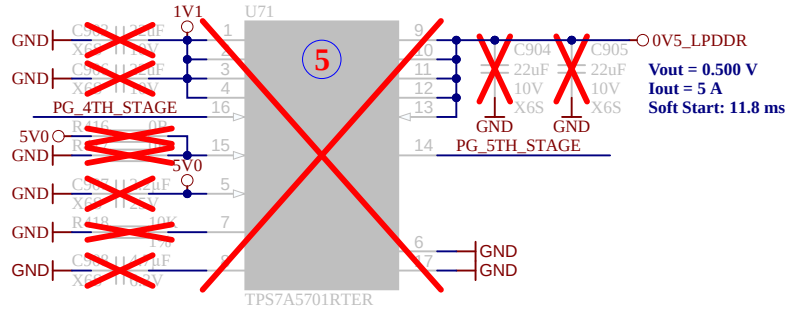

trenz electronic	Title: TE0960 – POWER 5		
	A4	Number: TE0960 GCME74A	Rev. 01
	Date: 18.09.2026	Copyright: Trenz Electronic GmbH	Page 49 of 55
	Filename: POWER_5.SchDoc		

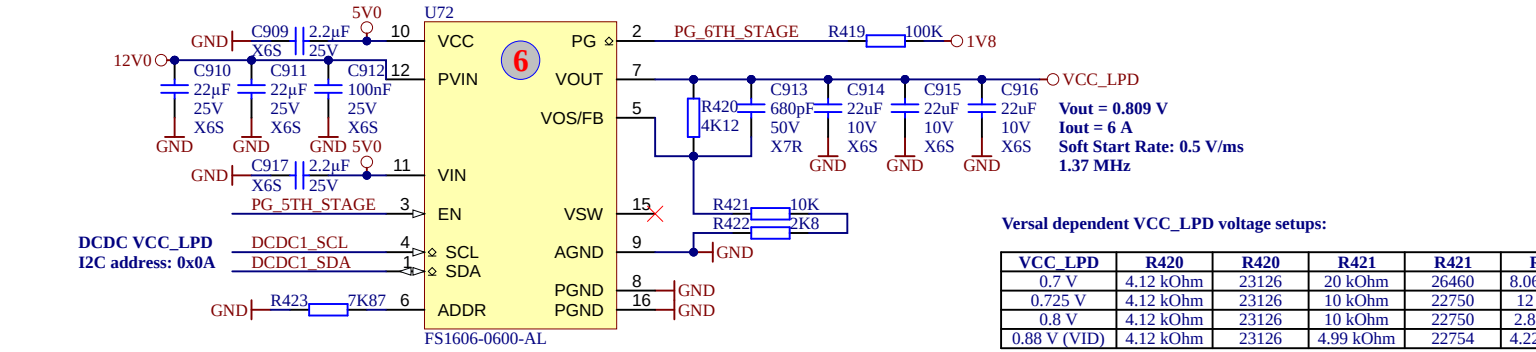

Versal dependent VCC_LPD voltage setups:

VCC_LPD	R420	R420	R421	R421	R422	R422	VCC_LPD
0.7 V	4.12 kOhm	23126	20 kOhm	26460	8.06 kOhm	25052	0.704 V
0.725 V	4.12 kOhm	23126	10 kOhm	22750	12 kOhm	22598	0.729 V
0.8 V	4.12 kOhm	23126	10 kOhm	22750	2.8 kOhm	35015	0.809 V
0.88 V (VID)	4.12 kOhm	23126	4.99 kOhm	22754	4.22 kOhm	25948	0.885 V

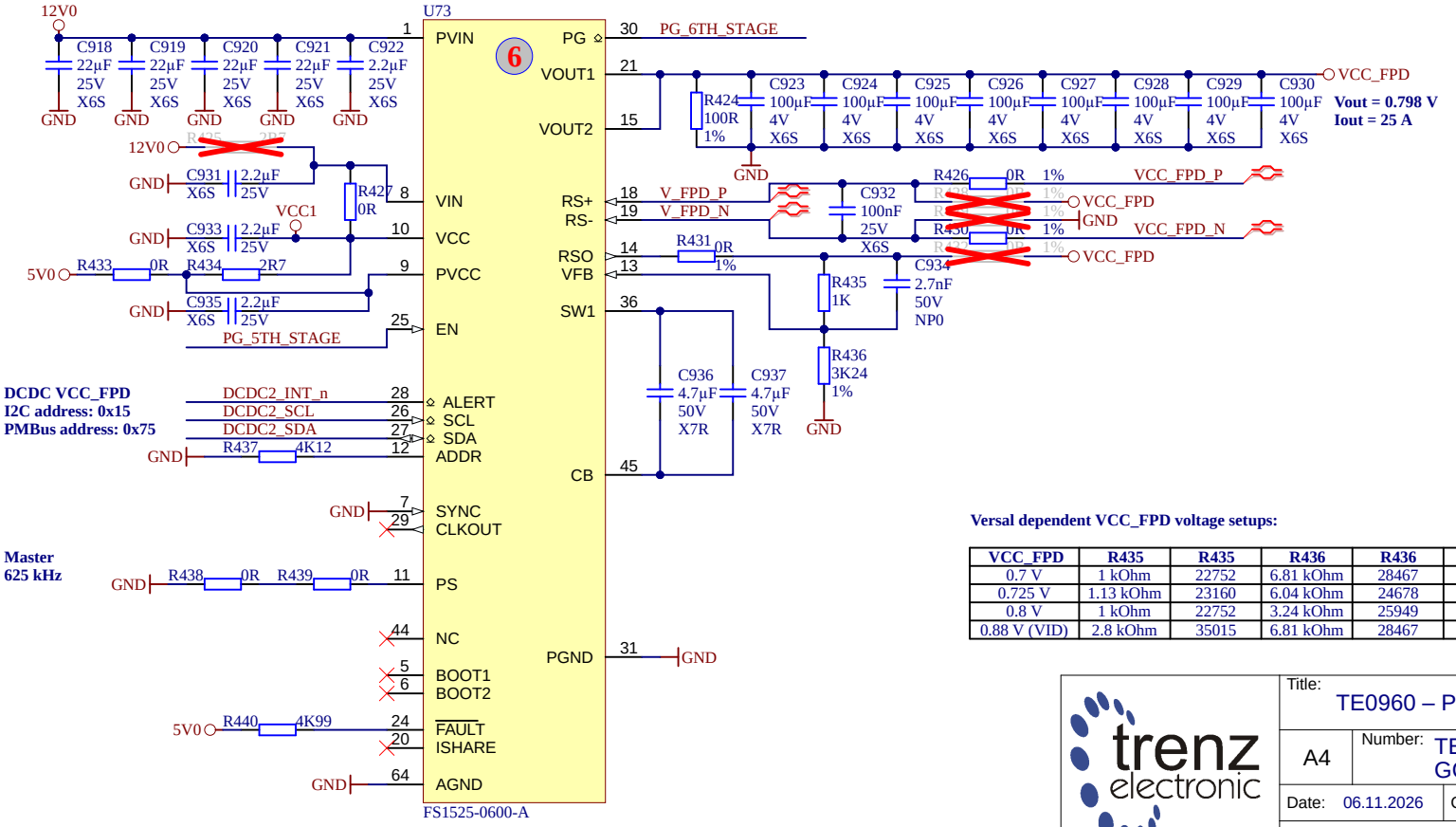

Versal dependent VCC_FPD voltage setups:

VCC_FPD	R435	R435	R436	R436	VCC_FPD
0.7 V	1 kOhm	22752	6.81 kOhm	28467	0.701 V
0.725 V	1.13 kOhm	23160	6.04 kOhm	24678	0.727 V
0.8 V	1 kOhm	22752	3.24 kOhm	25949	0.798 V
0.88 V (VID)	2.8 kOhm	35015	6.81 kOhm	28467	0.882 V

trenz electronic

Title: TE0960 – POWER 6

A4 | Number: TE0960 GCME74A | Rev. 01

Date: 06.11.2026 | Copyright: Trenz Electronic GmbH | Page 50 of 55

Filename: POWER_6.SchDoc

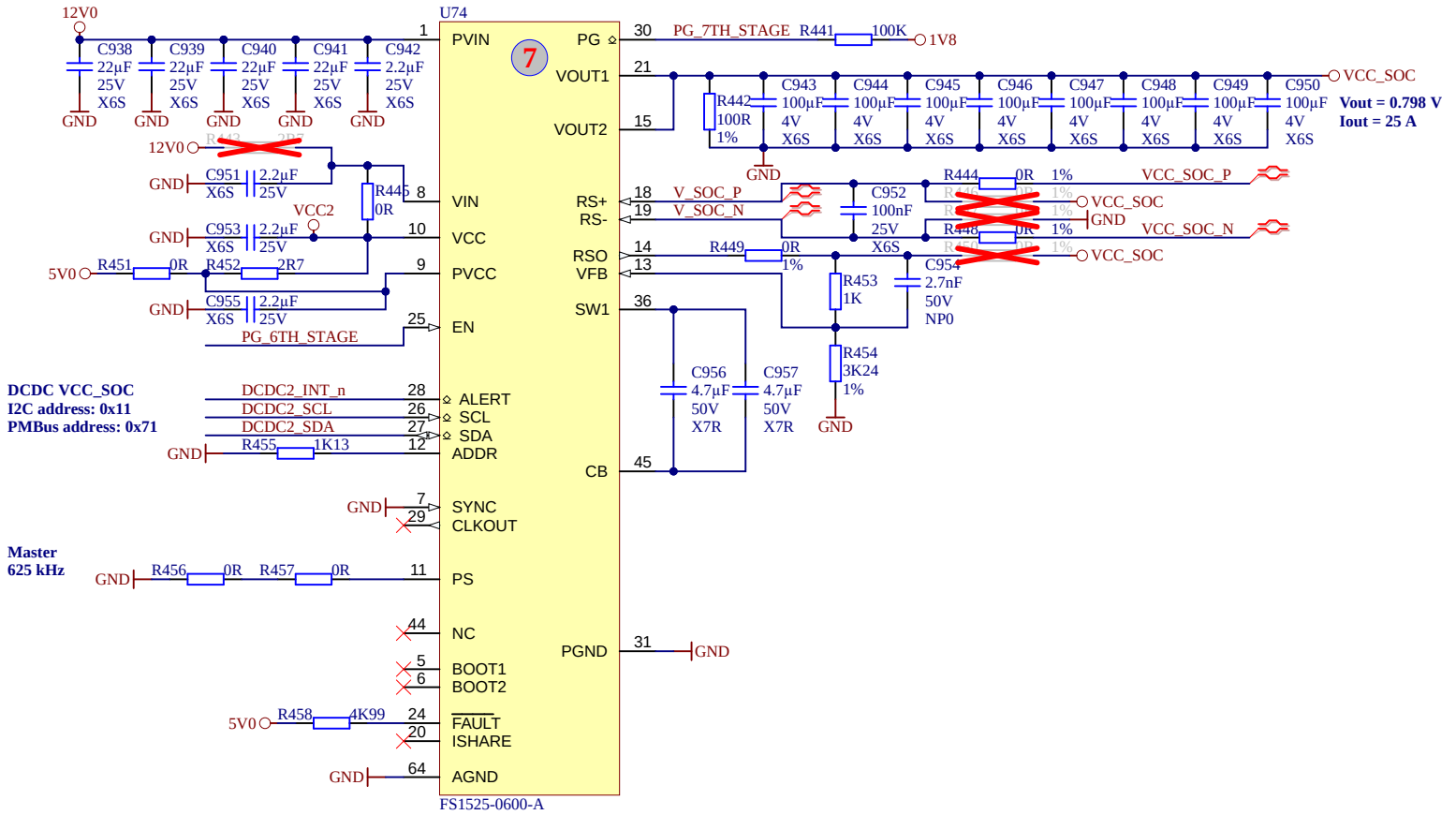

trenz electronic	Title: TE0960 – POWER 7		
	A4	Number: TE0960 GCME74A	Rev. 01
	Date: 23.10.2026	Copyright: Trenz Electronic GmbH	Page 51 of 55
	Filename: POWER_7.SchDoc		

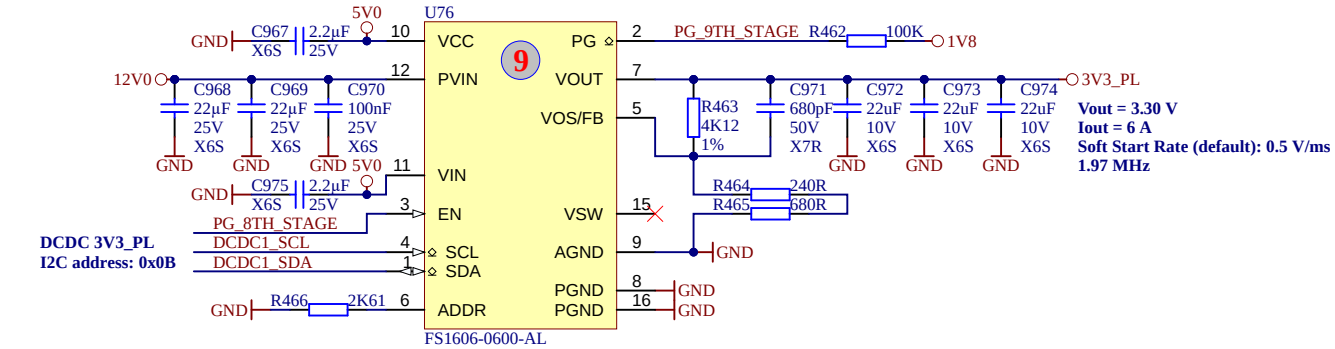

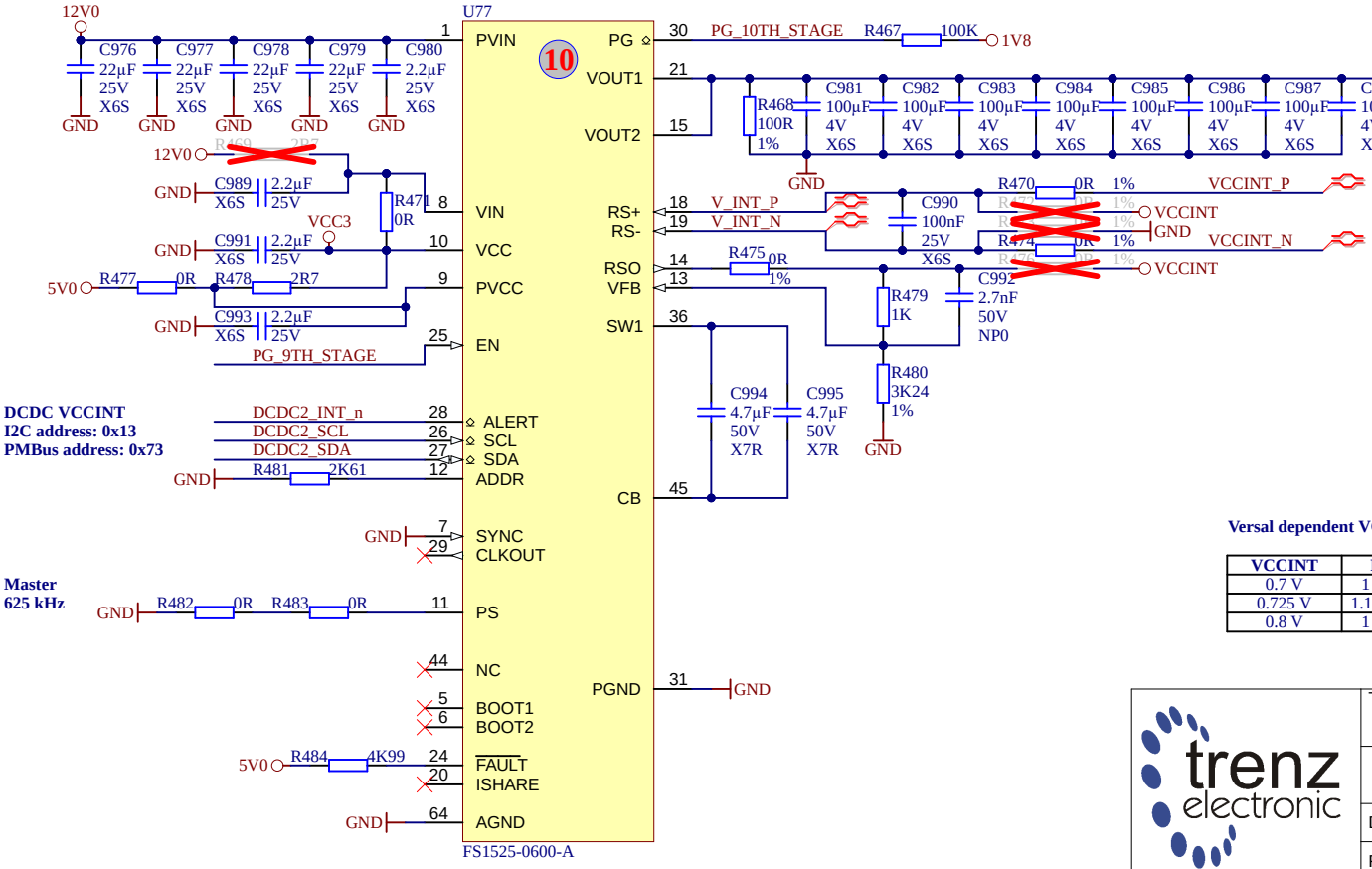

Versal dependent VCCINT voltage setups:

VCCINT	R479	R479	R480	R480	VCCINT
0.7 V	1 kOhm	22752	6.81 kOhm	28467	0.701 V
0.725 V	1.13 kOhm	23160	6.04 kOhm	24678	0.727 V
0.8 V	1 kOhm	22752	3.24 kOhm	25949	0.798 V

trenz electronic

Title: TE0960 – POWER 8		
A4	Number: TE0960 GCME74A	Rev. 01
Date: 23.10.2026	Copyright: Trenz Electronic GmbH	Page 52 of 55
Filename: POWER_8.SchDoc		

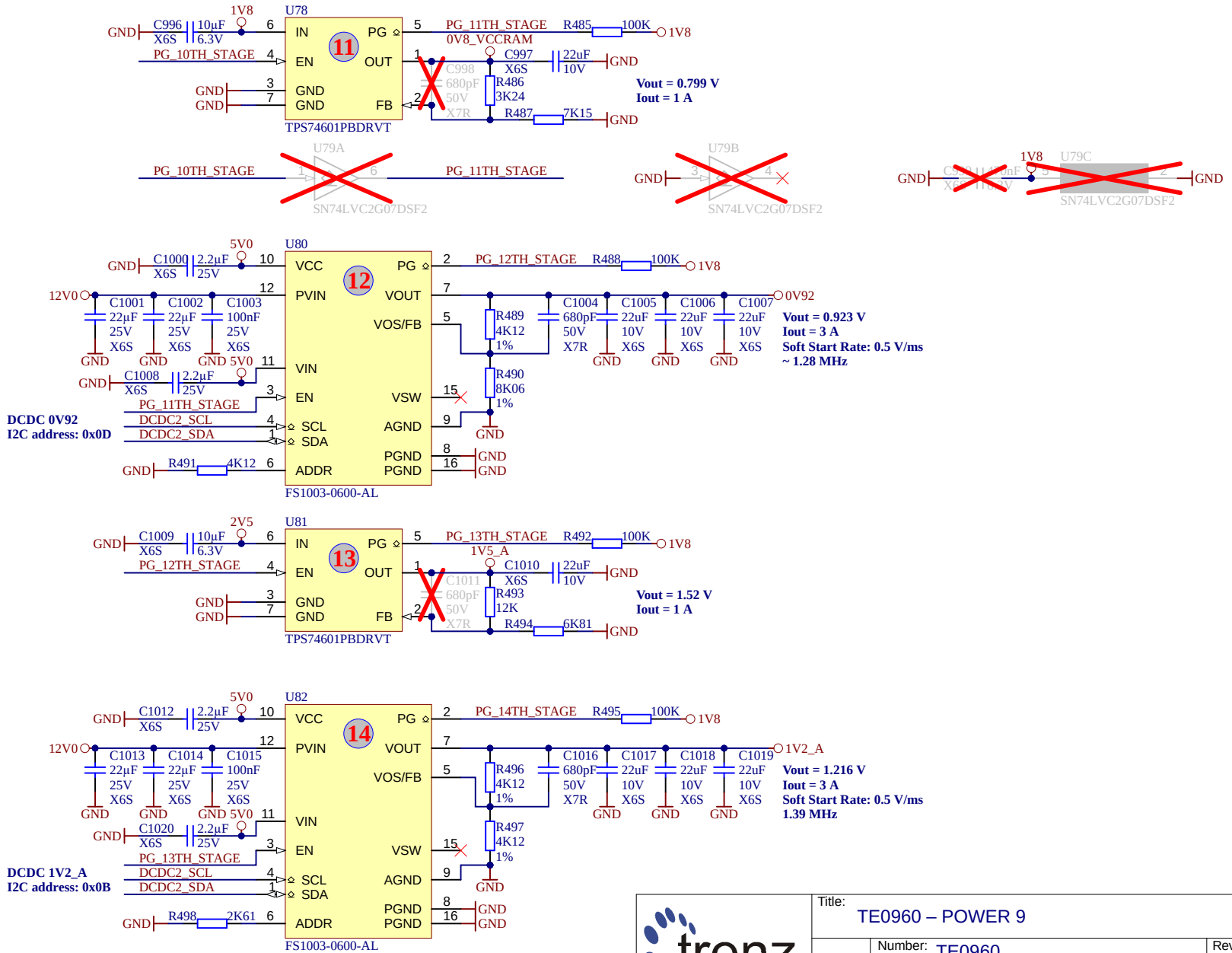

trenz electronic	Title: TE0960 – POWER 9		
	A4	Number: TE0960 GCME74A	Rev. 01
	Date: 23.10.2026	Copyright: Trenz Electronic GmbH	Page 53 of 55
	Filename: POWER_9.SchDoc		

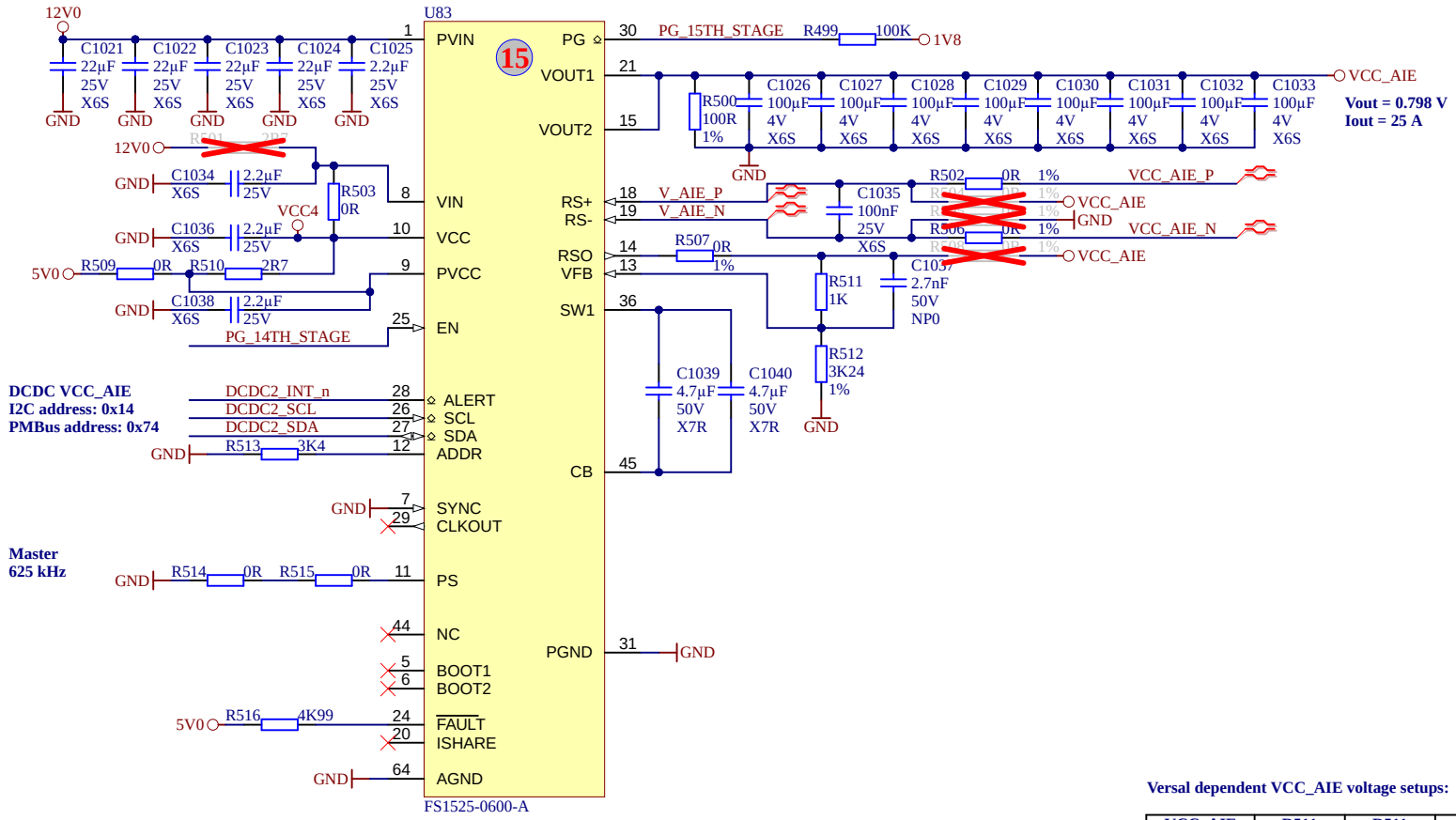

Versal dependent VCC_AIE voltage setups:

VCC_AIE	R511	R511	R512	R512	VCC_AIE
0.7 V	1 kOhm	22752	6.81 kOhm	28467	0.701 V
0.725 V	1.13 kOhm	23160	6.04 kOhm	24678	0.727 V
0.8 V (VID)	1 kOhm	22752	3.24 kOhm	25949	0.798 V

trenz electronic

Title: TE0960 – POWER 10		
A4	Number: TE0960 GCME74A	Rev. 01
Date: 23.10.2026	Copyright: Trenz Electronic GmbH	Page 54 of 55
Filename: POWER_10.SchDoc		

PWR

Testpoints on top and bottom:

Testpoints on top:		Testpoints on bottom:	
12V0_IN	TP1	12V0_IN	TP2
12V_IN_FUSED	TP3	12V_IN_FUSED	TP4
12V0	TP5	12V0	TP6
12V0_FAN	TP7	12V0_FAN	TP8
5V0	TP9	5V0	TP10
5V0_VIN_FTDI	TP11	5V0_VIN_FTDI	TP12
5V0_VBUS_FTDI	TP13	5V0_VBUS_FTDI	TP14
5V0_USB	TP15	5V0_USB	TP16
USB2_5V0	TP17	USB2_5V0	TP18
3V3_PS	TP19	3V3_PS	TP20
3V3_PL	TP21	3V3_PL	TP22
3V3_VDD_FTDI	TP23	3V3_VDD_FTDI	TP24
2V5	TP25	2V5	TP26
V_SD_IO	TP27	V_SD_IO	TP28
1V8	TP29	1V8	TP30
1V8_LPDDR5	TP31	1V8_LPDDR5	TP32
1V5	TP33	1V5	TP34
1V5_A	TP35	1V5_A	TP36
1V2	TP37	1V2	TP38
1V2_A	TP39	1V2_A	TP40
1V1	TP41	1V1	TP42
1V0XX_LPDDR5	TP43	1V0XX_LPDDR5	TP44
1V0	TP45	1V0	TP46
0V92	TP47	0V92	TP48
0V8_VCCRAM	TP49	0V8_VCCRAM	TP50
VCC_LPD	TP51	VCC_LPD	TP52
VCC_FPD	TP53	VCC_FPD	TP54
VCC_SOC	TP55	VCC_SOC	TP56
VCCINT	TP57	VCCINT	TP58
VCC_AIE	TP59	VCC_AIE	TP60
0V5_LPDDR5	TP61	0V5_LPDDR5	TP62
VCC_BATT	TP63	VCC_BATT	TP64

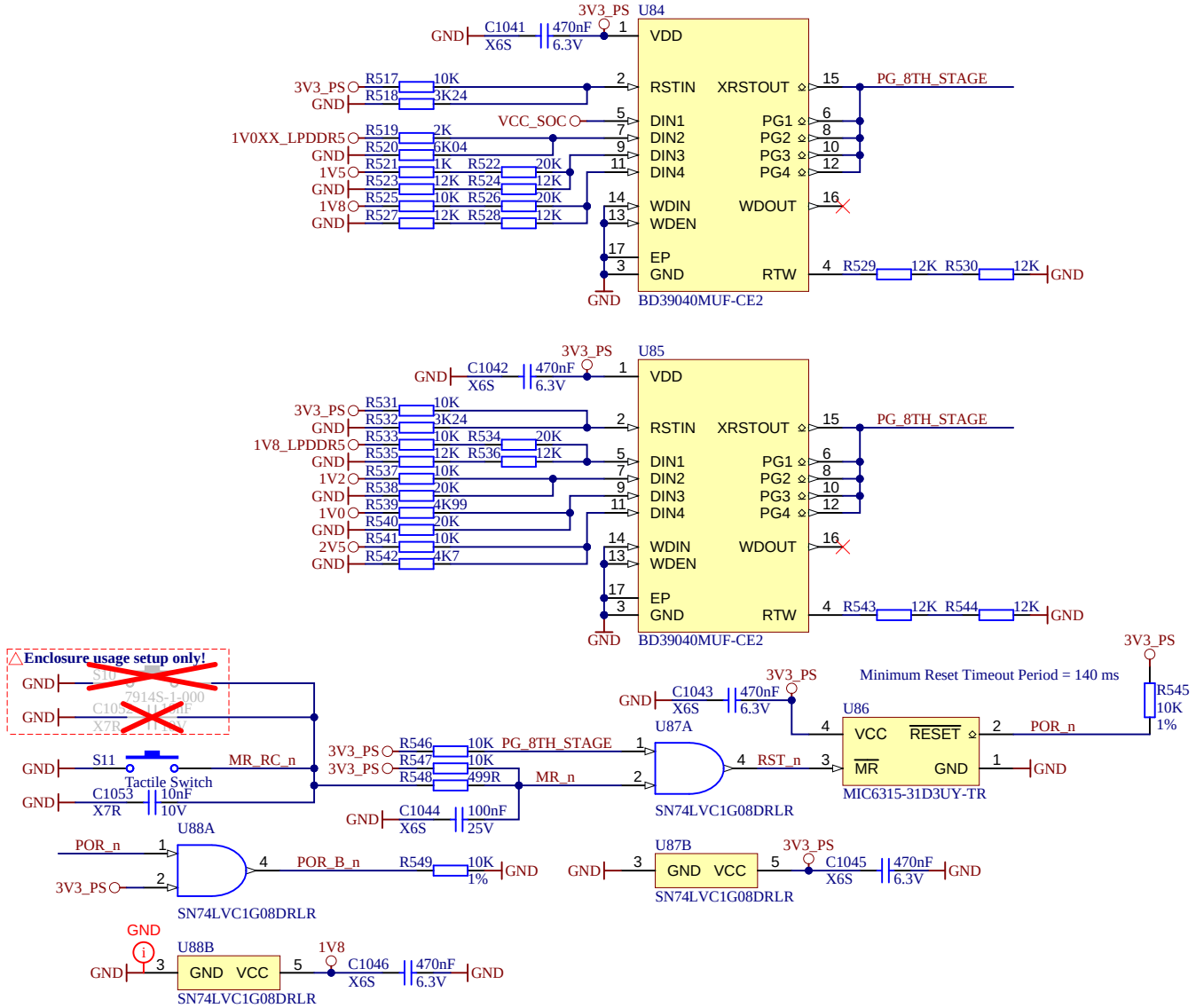

trenz electronic	Title: TE0960 – POWER 11		
	A4	Number: TE0960 GCME74A	Rev. 01
	Date: 18.09.2026	Copyright: Trenz Electronic GmbH	Page 55 of 55
	Filename: POWER_11.SchDoc		