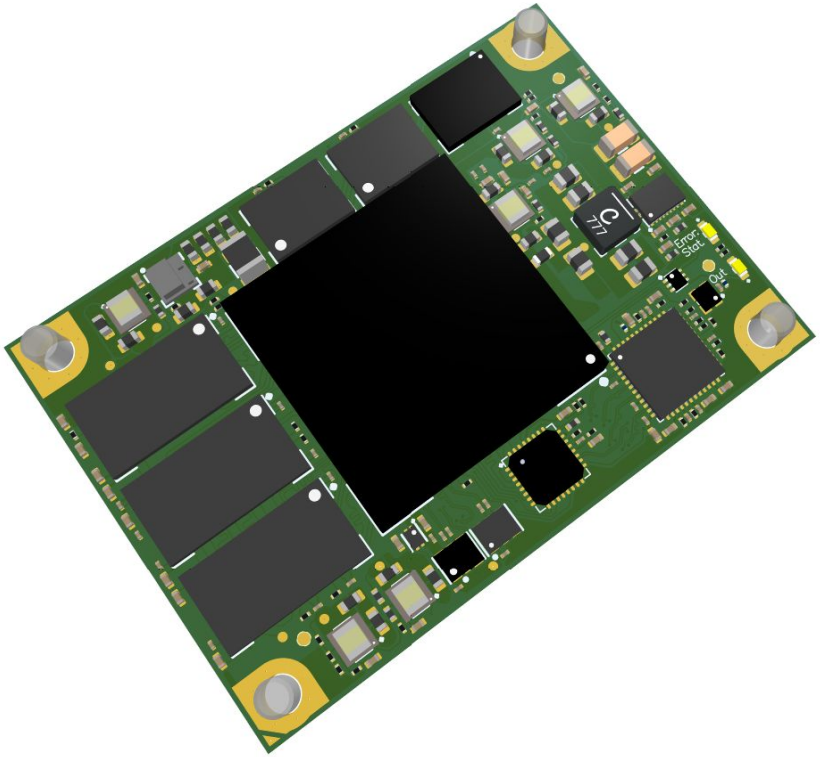

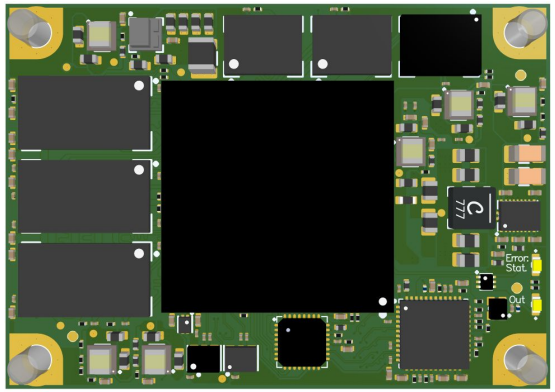

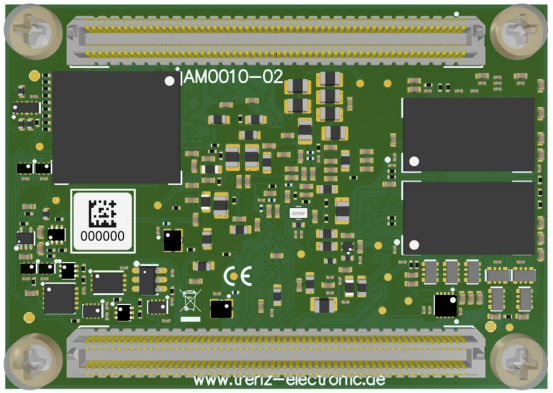

Regarding the usage of our schematics and alike documentation for Trenz module AM0010.

Project is protected under copyright and we strongly and strictly prohibit the reverse engineering or recreation, even if the design is just adapted or modified. AM0010 is protected under such right and in case of plagiarism we will have to do anything necessary in order to protect our assets.

Schematics and other handouts serve for informational purposes only!

trenz electronic	Title: AM0010 – Legal Notices Modules		
A4	Number: Legal Notices Modules 5DI21MA		Rev. 02
Date: 04.08.2022	Copyright: Trenz Electronic GmbH		Page 1 of 30
Filename: Legal Notices Modules.SchDoc			

U_B2B_Connector_1
B2B_Connector_1.SchDoc

U_B2B_Connector_2
B2B_Connector_2.SchDoc

U_MPSoC
MPSoC.SchDoc

U_DDR4-RAM
DDR4-RAM.SchDoc

U_DDR4-RAM_2
DDR4-RAM_2.SchDoc

U_DDR4-RAM_3
DDR4-RAM_3.SchDoc

U_DDR4-RAM_4
DDR4-RAM_4.SchDoc

U_DDR4-RAM_5
DDR4-RAM_5.SchDoc

U_DDR4-CAPS
DDR4-CAPS.SchDoc

U_DDR4-TERM
DDR4-TERM.SchDoc

U_ETHPHY
ETHPHY.SchDoc

U_USBPHY
USBPHY.SchDoc

U_eMMC
eMMC.SchDoc

U_MISC
MISC.SchDoc

U_POWER_1
POWER_1.SchDoc

U_POWER_2
POWER_2.SchDoc

U_REV_CH
Revision_Changes.SchDoc

U_Legal_Notices_Modules
Legal Notices Modules.SchDoc

Special notes:

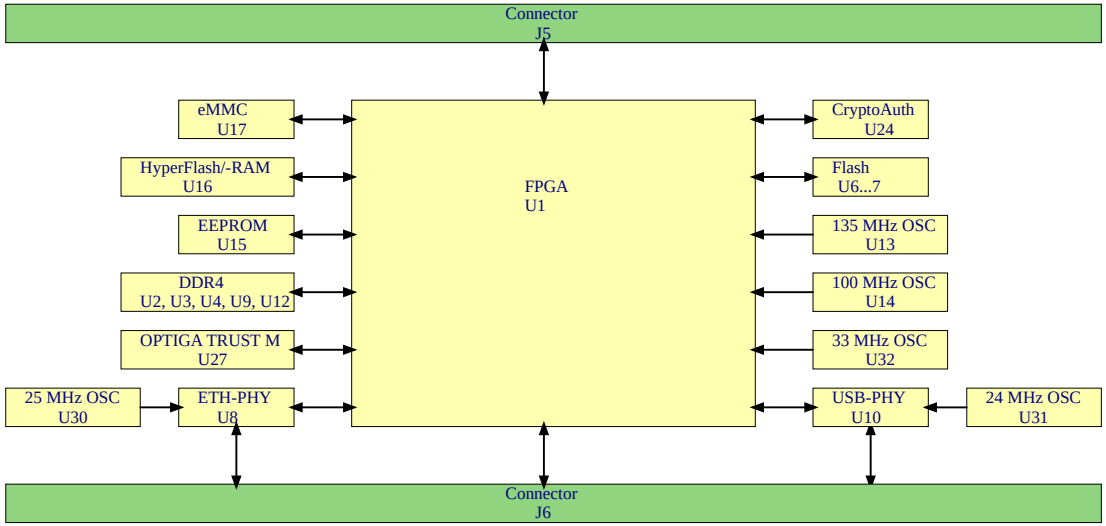

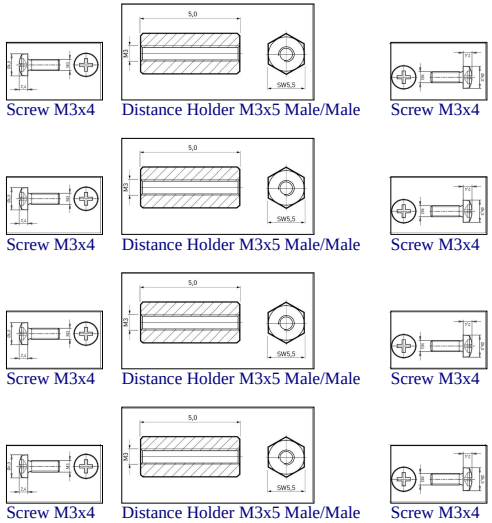

PM1 PM2

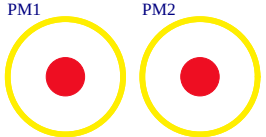

FIDU-DOT - mini FIDU-DOT - mini

PM3 PM4

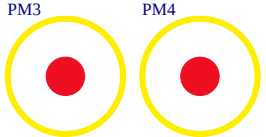

FIDU-DOT - mini FIDU-DOT - mini

PM5 PM6

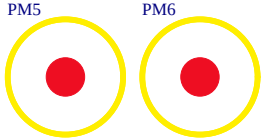

FIDU-DOT - mini FIDU-DOT - mini

Serial
Serial
Serialnumber 6,3 x 6.3mm

Mount.Hole 3.2mm Mount.Hole 3.2mm

Mount.Hole 3.2mm Mount.Hole 3.2mm

UKCA

UKCA Logo on Top Overlay

UKCA-TOPOVERLAY

Assembly variant	5DI21MA
Created by	VY
Modified by	VY
Modified at	25.11.2022
SVN Revision	588

trenz electronic

Title: AM0010		
A4	Number: AM0010 5DI21MA	Rev. 02
Date: 04.08.2022	Copyright: Trenz Electronic GmbH	Page 2 of 30
Filename: AM0010.SchDoc		

Connector W

J5A

GND		A1	B1	IO_W0_D12_P		
	IO_W0_D11_P	A2	B2	IO_W0_D12_N		
	IO_W0_D11_N	A3	B3	IO_W0_D10_P		
GND		A4	B4	IO_W0_D10_N		
	IO_W0_D4_P	A5	B5		V_MOD1	
	IO_W0_D4_N	A6	B6	IO_W0_D5_P		
		A7	B7	IO_W0_D5_N		
V_MOD1	IO_W0_D3_P	A8	B8		GND	
	IO_W0_D3_N	A9	B9	IO_W0_D2_P		
GND		A10	B10	IO_W0_D2_N		
	IO_W1_D12_P	A11	B11		V_MOD1	
	IO_W1_D12_N	A12	B12	IO_W1_D10_P		
	IO_W1_D11_P	A13	B13	IO_W1_D10_N		
	IO_W1_D11_N	A14	B14		GND	
		A15	B15	IO_W1_D5_P		
V_MOD1	IO_W1_D4_P	A16	B16	IO_W1_D5_N		
	IO_W1_D4_N	A17	B17		V_MOD1	
		A18	B18	IO_W1_D2_P		
GND	IO_W1_D3_P	A19	B19	IO_W1_D2_N		
	IO_W1_D3_N	A20	B20		GND	
		A21	B21	B224_CLK0_P		
		A22	B22	B224_CLK0_N		
GND	B224_TX3_P	A23	B23		GND	
	B224_TX3_N	A24	B24		GND	
GND		A25	B25	B224_TX2_P		
GND		A26	B26	B224_TX2_N		
	B224_TX1_P	A27	B27		GND	
	B224_TX1_N	A28	B28		GND	
GND		A29	B29	B224_TX0_P		
GND		A30	B30	B224_TX0_N		
W3_TX3	B24_L1_P	A31	B31		GND	
W3_TX3	B24_L1_N	A32	B32		GND	
GND	B24_L8_P	A33	B33	B24_L4_P		W3_TX2
GND	B24_L8_N	A34	B34	B24_L4_N		W3_TX2
W3_TX1	B24_L10_P	A35	B35		GND	
W3_TX1	B24_L10_N	A36	B36		GND	
GND		A37	B37	B24_L9_P		W3_TX0
GND		A38	B38	B24_L9_N		W3_TX0
W3_CLK0	B24_L6_P	A39	B39		GND	
W3_CLK0	B24_L6_N	A40	B40		GND	
		A41	B41	IO_W4_D12_P		
GND	IO_W4_D11_P	A42	B42	IO_W4_D12_N		
	IO_W4_D11_N	A43	B43	IO_W4_D10_P		
		A44	B44	IO_W4_D10_N		
GND	IO_W4_D4_P	A45	B45		V_MOD1	
	IO_W4_D4_N	A46	B46	IO_W4_D5_P		
		A47	B47	IO_W4_D5_N		
V_MOD1	IO_W4_D3_P	A48	B48			
	IO_W4_D3_N	A49	B49	IO_W4_D2_P		
		A50	B50	IO_W4_D2_N		
GND	IO_W5_D12_P	A51	B51		V_MOD1	
	IO_W5_D12_N	A52	B52	IO_W5_D10_P		
	IO_W5_D11_P	A53	B53	IO_W5_D10_N		
	IO_W5_D11_N	A54	B54		GND	
V_MOD1		A55	B55	IO_W5_D5_P		
	IO_W5_D4_P	A56	B56	IO_W5_D5_N		
	IO_W5_D4_N	A57	B57		V_MOD1	
GND		A58	B58	IO_W5_D2_P		
	IO_W5_D3_P	A59	B59	IO_W5_D2_N		
	IO_W5_D3_N	A60	B60		GND	

ADM6-60-01.5-L-4-2-FR

J5B

GND		C1	D1			
	IO_W0_D9_P	C2	D2			
	IO_W0_D9_N	C3	D3		V_IO_W01	
		C4	D4	IO_W0_D8_P		
GND	IO_W0_D6_P	C5	D5	IO_W0_D8_N		
	IO_W0_D6_N	C6	D6	IO_W0_D7_P		
		C7	D7	IO_W0_D7_N		
1.8V	IO_W0_D1_P	C8	D8		GND	
	IO_W0_D1_N	C9	D9	IO_W0_D0_P		
		C10	D10	IO_W0_D0_N		
GND		C11	D11			
		C12	D12	IO_W1_D8_P		
	IO_W1_D9_P	C13	D13	IO_W1_D8_N		
	IO_W1_D9_N	C14	D14		GND	
		C15	D15	IO_W1_D7_P		
1.8V	IO_W1_D6_P	C16	D16	IO_W1_D7_N		
	IO_W1_D6_N	C17	D17		V_IO_W01	
		C18	D18	IO_W1_D0_P		
GND	IO_W1_D1_P	C19	D19	IO_W1_D0_N		
	IO_W1_D1_N	C20	D20		GND	
		C21	D21	B224_CLK1_P		
GND		C22	D22	B224_CLK1_N		
GND	B224_RX3_P	C23	D23		GND	
	B224_RX3_N	C24	D24		GND	
GND		C25	D25	B224_RX2_P		
GND		C26	D26	B224_RX2_N		
	B224_RX1_P	C27	D27		GND	
	B224_RX1_N	C28	D28		GND	
GND		C29	D29	B224_RX0_P		
GND		C30	D30	B224_RX0_N		
W3_RX3	B24_L2_P	C31	D31		GND	
W3_RX3	B24_L2_N	C32	D32		GND	
		C33	D33	B24_L3_P		W3_RX2
GND		C34	D34	B24_L3_N		W3_RX2
GND	B24_L12_P	C35	D35	B24_L5_P		GND
W3_RX1	B24_L12_N	C36	D36	B24_L5_N		GND
W3_RX1		C37	D37	B24_L11_P		W3_RX0
GND		C38	D38	B24_L11_N		W3_RX0
GND	B24_L7_P	C39	D39		GND	
W3_CLK1	B24_L7_N	C40	D40		V_IO_W3	
W3_CLK1		C41	D41			
GND	IO_W4_D9_P	C42	D42			
	IO_W4_D9_N	C43	D43		V_IO_W45	
		C44	D44	IO_W4_D8_P		
	IO_W4_D6_P	C45	D45	IO_W4_D8_N		
	IO_W4_D6_N	C46	D46	IO_W4_D7_P		
		C47	D47	IO_W4_D7_N		
	IO_W4_D1_P	C48	D48		GND	
	IO_W4_D1_N	C49	D49	IO_W4_D0_P		
		C50	D50	IO_W4_D0_N		
GND		C51	D51			
		C52	D52	IO_W5_D8_P		
	IO_W5_D9_P	C53	D53	IO_W5_D8_N		
	IO_W5_D9_N	C54	D54		GND	
		C55	D55	IO_W5_D7_P		
	IO_W5_D6_P	C56	D56	IO_W5_D7_N		
	IO_W5_D6_N	C57	D57		V_IO_W45	
GND		C58	D58	IO_W5_D0_P		
	IO_W5_D1_P	C59	D59	IO_W5_D0_N		
	IO_W5_D1_N	C60	D60		GND	

ADM6-60-01.5-L-4-2-FR

trenz electronic	Title: AM0010 – B2B_Connector_1		
A4	Number: B2B_Connector_1 5DI21MA		Rev. 02
Date: 04.08.2022	Copyright: Trenz Electronic GmbH		Page 3 of 30
Filename: B2B_Connector_1.SchDoc			

Connector X

J6A

		A1	B1		
		A2	B2	IO_X0_D9_P	GND
V_IO_X01		A3	B3	IO_X0_D9_N	
	IO_X0_D8_P	A4	B4		
	IO_X0_D8_N	A5	B5	IO_X0_D6_P	GND
	IO_X0_D7_P	A6	B6	IO_X0_D6_N	
	IO_X0_D7_N	A7	B7		
		A8	B8	IO_X0_D1_P	1.8V
GND	IO_X0_D0_P	A9	B9	IO_X0_D1_N	
	IO_X0_D0_N	A10	B10		
		A11	B11		GND
	IO_X1_D8_P	A12	B12		
	IO_X1_D8_N	A13	B13	IO_X1_D9_P	
		A14	B14	IO_X1_D9_N	
GND	IO_X1_D7_P	A15	B15		
	IO_X1_D7_N	A16	B16	IO_X1_D6_P	1.8V
		A17	B17	IO_X1_D6_N	
V_IO_X01	IO_X1_D0_P	A18	B18		
	IO_X1_D0_N	A19	B19	IO_X1_D1_P	GND
		A20	B20	IO_X1_D1_N	
GND	B505_CLK3_P	A21	B21		
	B505_CLK3_N	A22	B22		GND
		A23	B23	B505_RX3_P	GND
GND		A24	B24	B505_RX3_N	
GND	B505_RX2_P	A25	B25		
	B505_RX2_N	A26	B26		GND
		A27	B27	B505_RX1_P	GND
GND		A28	B28	B505_RX1_N	
GND	B505_RX0_P	A29	B29		
	B505_RX0_N	A30	B30		GND
		A31	B31	IO_X3_D10_P	GND
GND	IO_X3_D7_P	A32	B32	IO_X3_D10_N	
	IO_X3_D7_N	A33	B33	IO_X3_D8_P	
	IO_X3_D6_P	A34	B34	IO_X3_D8_N	
	IO_X3_D6_N	A35	B35		
		A36	B36	IO_X3_D5_P	V_IO_X3
GND	IO_X3_D0_P	A37	B37	IO_X3_D5_N	
	IO_X3_D0_N	A38	B38	IO_X3_D1_P	
		A39	B39	IO_X3_D1_N	
		A40	B40		
		A41	B41		GND
	ETH0_LED0#	A42	B42		
	ETH0_A_P	A43	B43	ETH0_LED1#	
	ETH0_A_N	A44	B44	ETH0_B_P	
GND		A45	B45	ETH0_B_N	
		A46	B46		
		A47	B47	USB0_ID	
		A48	B48		
	UART1_RX	A49	B49	UART0_RX	
	UART1_TX	A50	B50	UART0_TX	
	SD_CMD	A51	B51	PERST0#	
	SD_CLK	A52	B52	PERST1#	
	SD_D4	A53	B53		
	SD_D5	A54	B54	SD_D0	GND
	SD_D6	A55	B55	SD_D1	
	SD_D7	A56	B56	SD_D2	
	SD_CD#	A57	B57	SD_D3	
	SD_WP	A58	B58	RST_M2C#	
	V_BAT	A59	B59		
		A60	B60		3.3V
GND					

ADM6-60-01.5-L-4-2-FR

J6B

	IO_X0_D12_P	C1	D1		
	IO_X0_D12_N	C2	D2	IO_X0_D11_P	GND
	IO_X0_D10_P	C3	D3	IO_X0_D11_N	
	IO_X0_D10_N	C4	D4		
		C5	D5	IO_X0_D4_P	GND
V_MOD1	IO_X0_D5_P	C6	D6	IO_X0_D4_N	
	IO_X0_D5_N	C7	D7		
		C8	D8	IO_X0_D3_P	V_MOD1
GND	IO_X0_D2_P	C9	D9	IO_X0_D3_N	
	IO_X0_D2_N	C10	D10		
		C11	D11	IO_X1_D12_P	GND
V_MOD1	IO_X1_D10_P	C12	D12	IO_X1_D12_N	
	IO_X1_D10_N	C13	D13	IO_X1_D11_P	
		C14	D14	IO_X1_D11_N	
GND	IO_X1_D5_P	C15	D15		
	IO_X1_D5_N	C16	D16	IO_X1_D4_P	V_MOD1
		C17	D17	IO_X1_D4_N	
V_MOD1	IO_X1_D2_P	C18	D18		
	IO_X1_D2_N	C19	D19	IO_X1_D3_P	GND
		C20	D20	IO_X1_D3_N	
GND	B505_CLK2_P	C21	D21		
	B505_CLK2_N	C22	D22		GND
		C23	D23	B505_TX3_P	
GND		C24	D24	B505_TX3_N	
GND	B505_TX2_P	C25	D25		
	B505_TX2_N	C26	D26		GND
		C27	D27	B505_TX1_P	GND
GND		C28	D28	B505_TX1_N	
GND	B505_TX0_P	C29	D29		
	B505_TX0_N	C30	D30		GND
		C31	D31	IO_X3_D11_P	GND
GND		C32	D32	IO_X3_D11_N	
		C33	D33	U_SCL	
	IO_X3_D9_P	C34	D34	U_SDA	
	IO_X3_D9_N	C35	D35	U_INT	
		C36	D36	IO_X3_D4_P	
GND	IO_X3_D2_P	C37	D37	IO_X3_D4_N	
	IO_X3_D2_N	C38	D38	IO_X3_D3_P	
		C39	D39	IO_X3_D3_N	
		C40	D40		
		C41	D41		GND
		C42	D42		
	ETH0_C_P	C43	D43		
	ETH0_C_N	C44	D44	ETH0_D_P	
		C45	D45	ETH0_D_N	
GND	USB0_D_P	C46	D46	V_USB0	
	USB0_D_N	C47	D47	GPIO0	
	USB0_CPEN	C48	D48	GPIO1	
	M_INT	C49	D49	GPIO2	
	M_SCL	C50	D50	GPIO3	
	M_SDA	C51	D51	TDI	
		C52	D52	TCK	
V_IO_CFG	DONE	C53	D53		
	MODE0	C54	D54	TDO	GND
	MODE1	C55	D55	TMS	
	MODE2	C56	D56	DX_P	
	MODE3	C57	D57	DX_N	
	PS_SRST#	C58	D58	PWR_EN	
	PS_POR#	C59	D59	PWR_GOOD	
		C60	D60		
GND					

ADM6-60-01.5-L-4-2-FR

Do not tie "PWR_EN" to VDD directly. This signal could be tied to GND within this module.

trenz electronic	Title: AM0010 – B2B_Connector_2		
A4	Number: B2B_Connector_2 5DI21MA		Rev. 02
Date: 04.08.2022	Copyright: Trenz Electronic GmbH		Page 4 of 30
Filename: B2B_Connector_2.SchDoc			

U_B64
B64.SchDoc

U_B65
B65.SchDoc

U_B66
B66.SchDoc

U_B_HD
B_HD.SchDoc

U_B_MIO
B_MIO.SchDoc

U_PS_DDR
PS_DDR.SchDoc

U_B_PS_GT
B_PS_GT.SchDoc

U_B_GT
B_GT.SchDoc

U_CONFIG
CONFIG.SchDoc

U_ZU_POWER
ZU_POWER.SchDoc

U_ZU_PS_POWER
ZU_PS_POWER.SchDoc

trenz electronic	Title: AM0010 – MPSoC		
A4	Number: MPSoC 5DI21MA		Rev. 02
Date: 04.08.2022	Copyright: Trenz Electronic GmbH		Page 5 of 30
Filename: MPSoC.SchDoc			

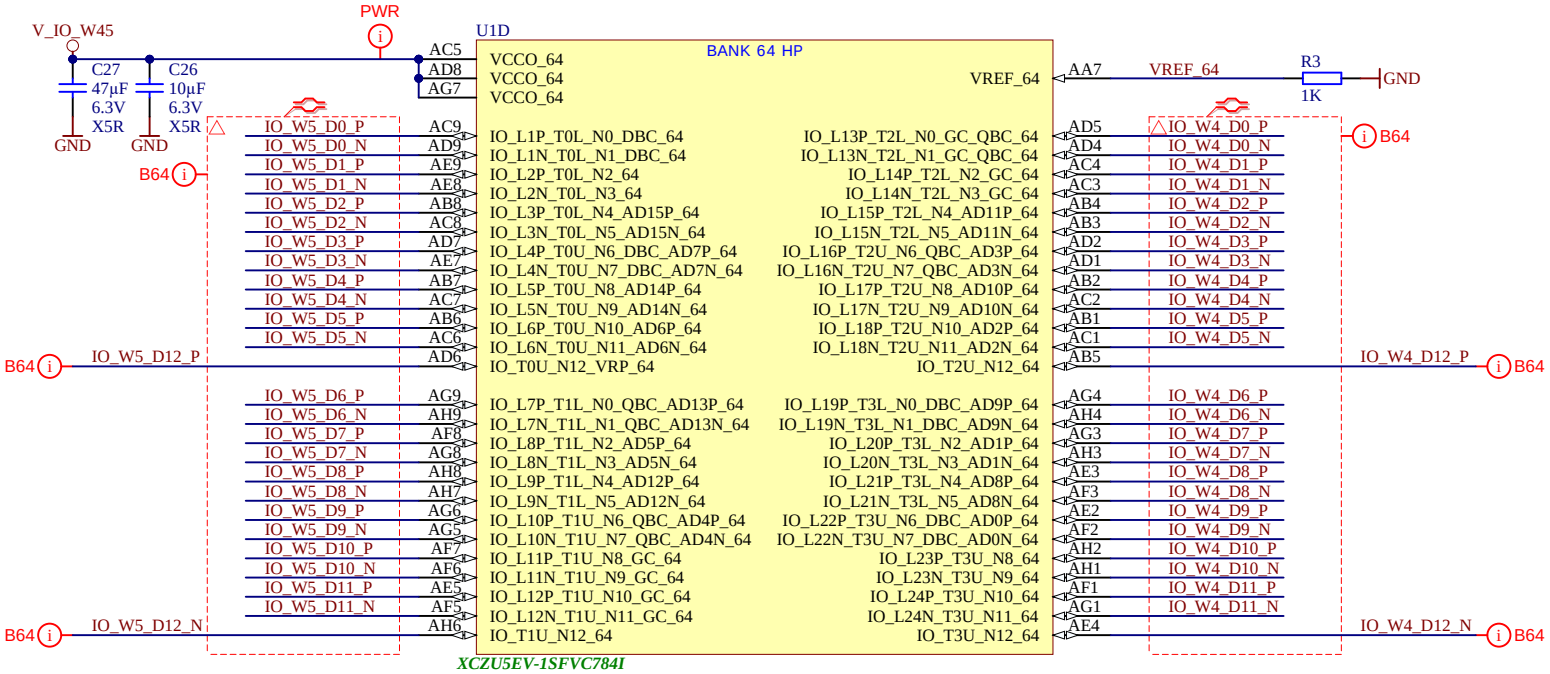

trenz electronic	Title: AM0010 – B64		
A4	Number: B64 5DI21MA		Rev. 02
Date: 04.08.2022	Copyright: Trenz Electronic GmbH		Page 6 of 30
Filename: B64.SchDoc			

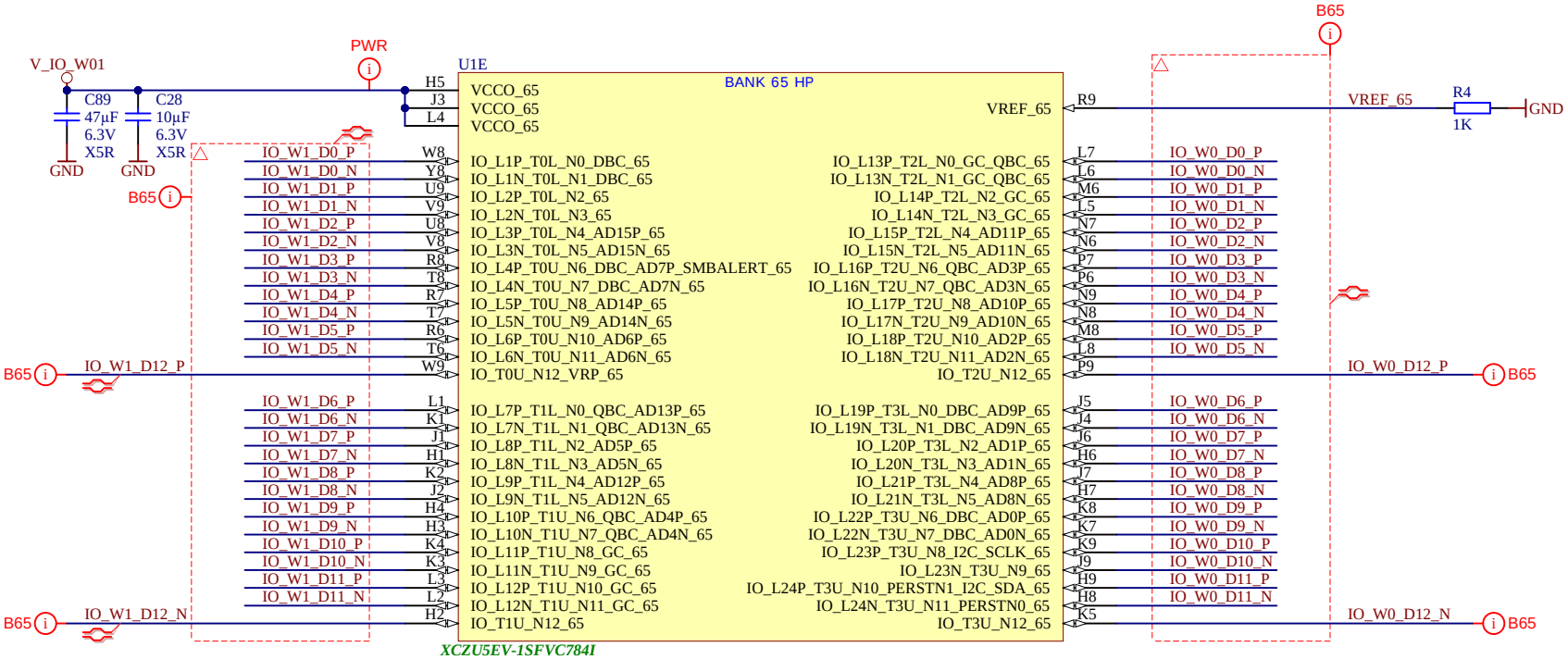

trenz electronic	Title: AM0010 – B65		
A4	Number: B65 5DI21MA		Rev. 02
Date: 04.08.2022	Copyright: Trenz Electronic GmbH		Page 7 of 30
	Filename: B65.SchDoc		

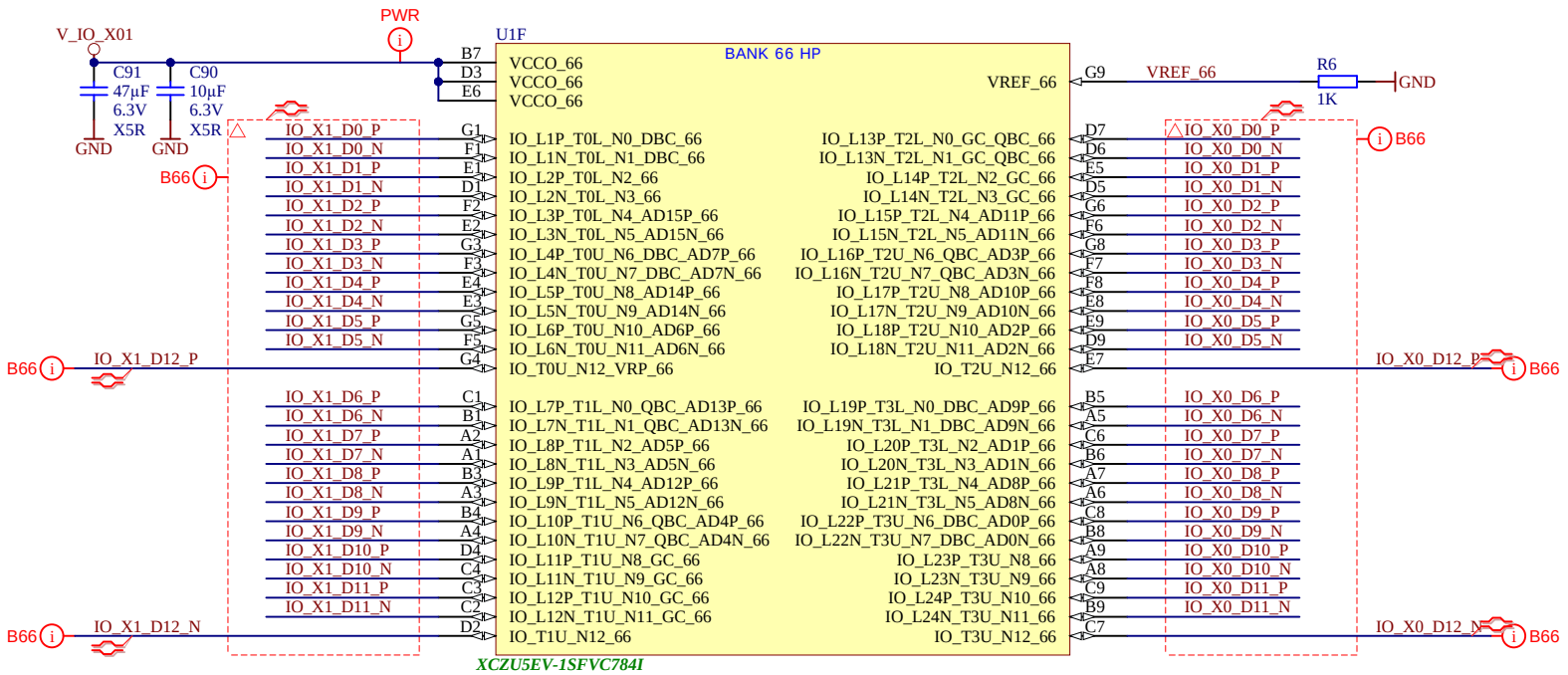

trenz electronic	Title: AM0010 – B66		
A4	Number: B66 5DI21MA		Rev. 02
Date: 04.08.2022	Copyright: Trenz Electronic GmbH		Page 8 of 30
Filename: B66.SchDoc			

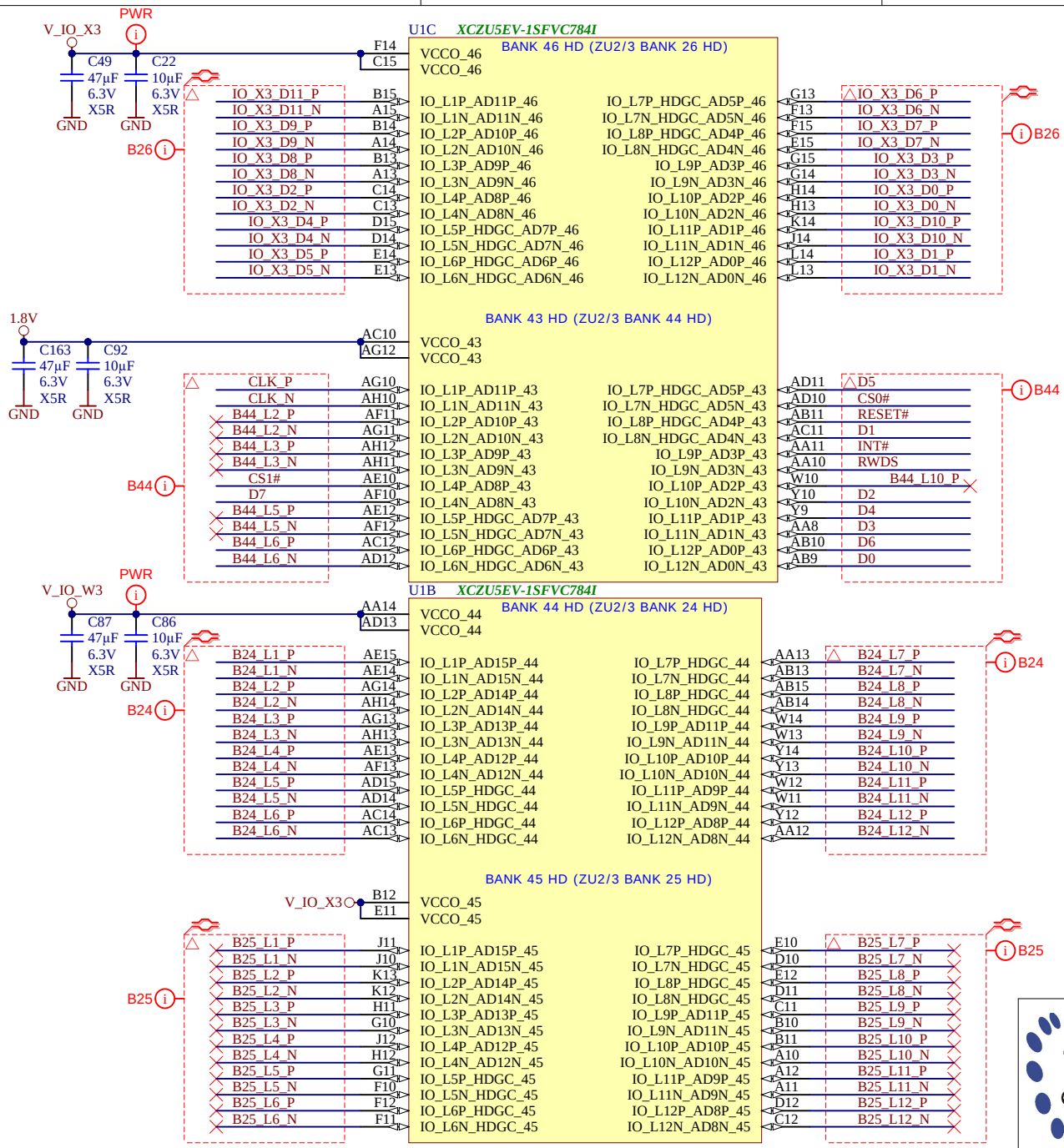

trenz electronic	Title: AM0010 – B_HD		
A4	Number: B_HD 5DI21MA		Rev. 02
Date: 04.08.2022	Copyright: Trenz Electronic GmbH		Page 9 of 30
Filename: B_HD.SchDoc			

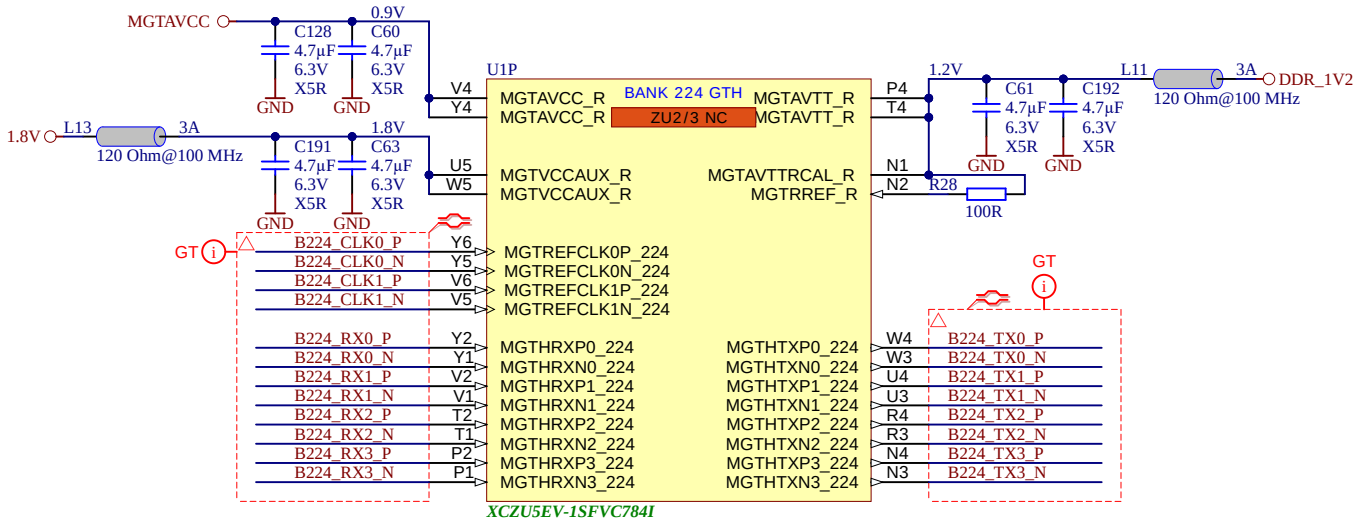

trenz electronic	Title: AM0010 – B_GT		
A4	Number: B_GT 5DI21MA		Rev. 02
Date: 04.08.2022	Copyright: Trenz Electronic GmbH		Page 10 of 30
Filename: B_GT.SchDoc			

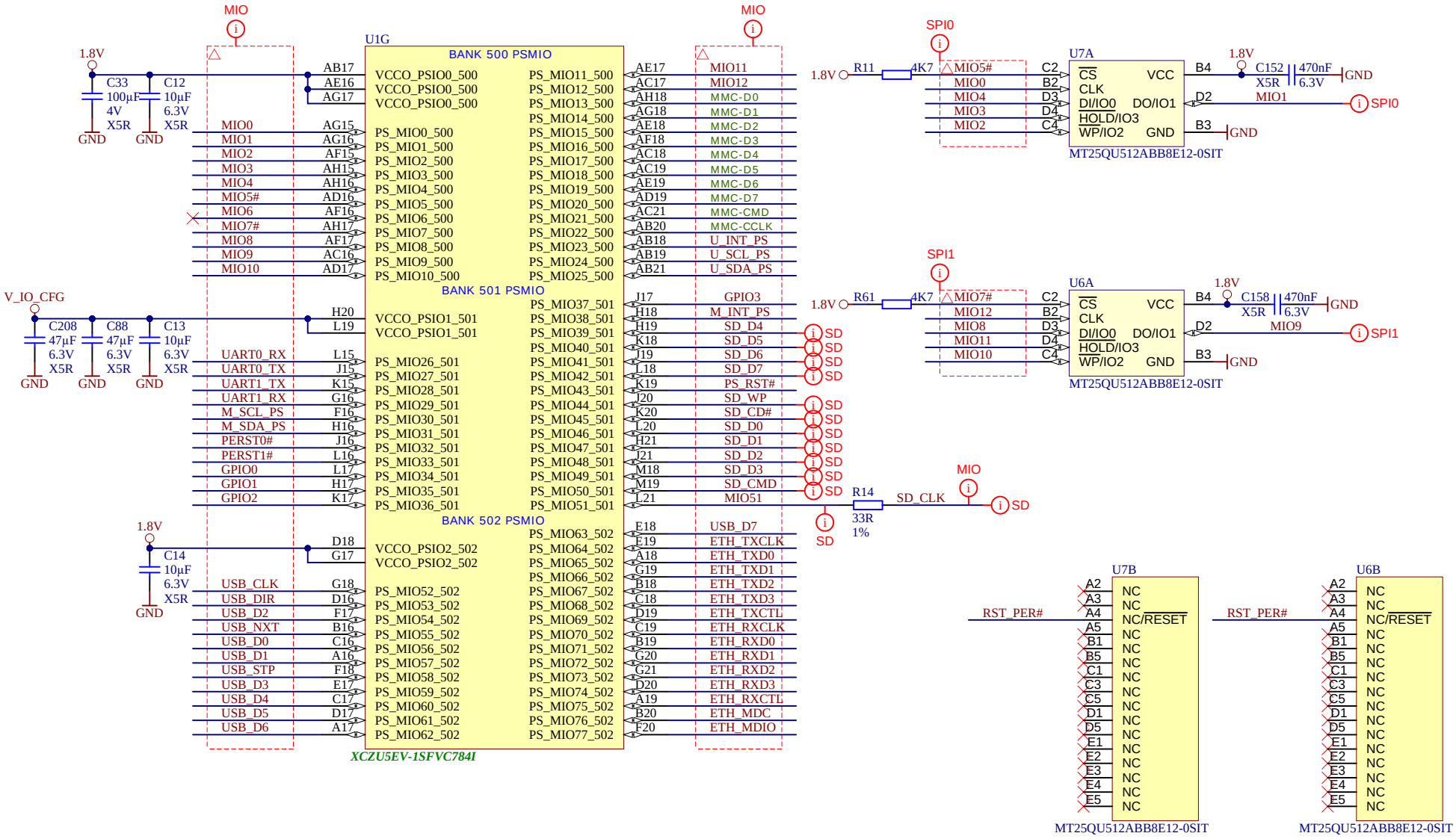

Title: AM0010 – B_MIO			
A4	Number: B_MIO 5DI21MA		Rev. 02
Date: 04.08.2022	Copyright: Trenz Electronic GmbH		Page 11 of 30
Filename: B_MIO.SchDoc			

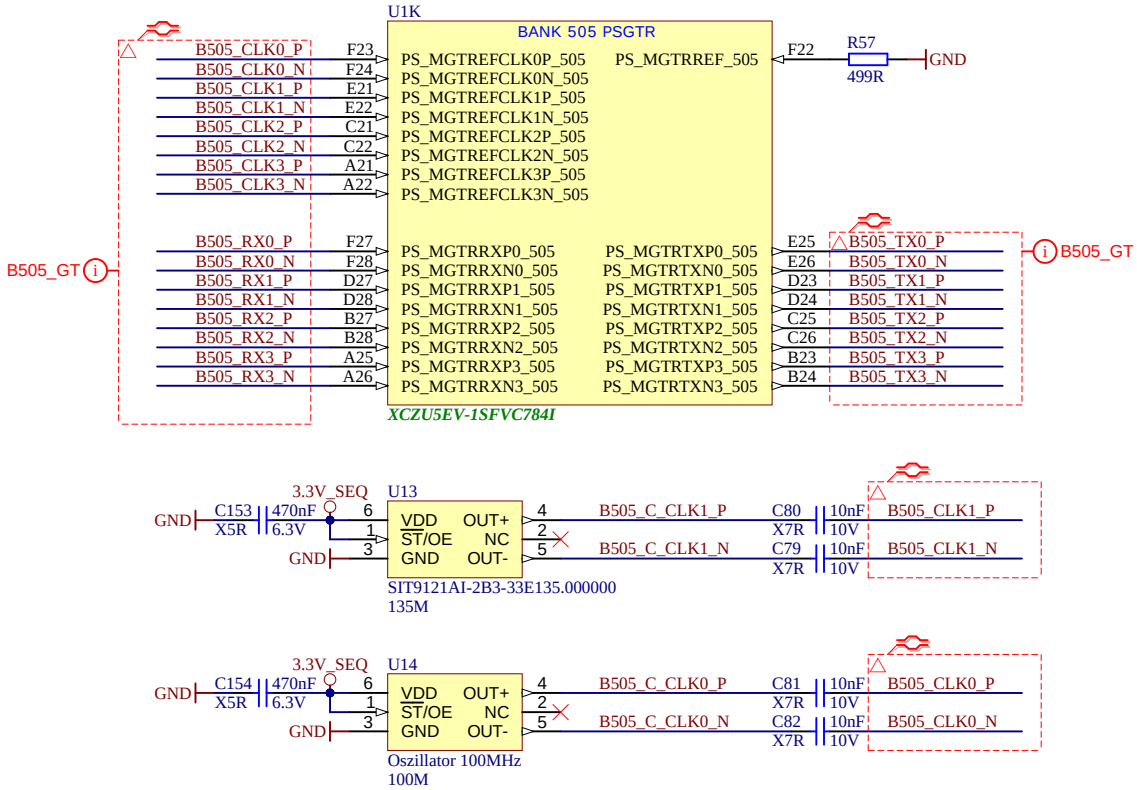

trenz electronic	Title: AM0010 – B_PS_GT		
A4	Number: B_PS_GT 5DI21MA		Rev. 02
Date: 04.08.2022	Copyright: Trenz Electronic GmbH		Page 12 of 30
Filename: B_PS_GT.SchDoc			

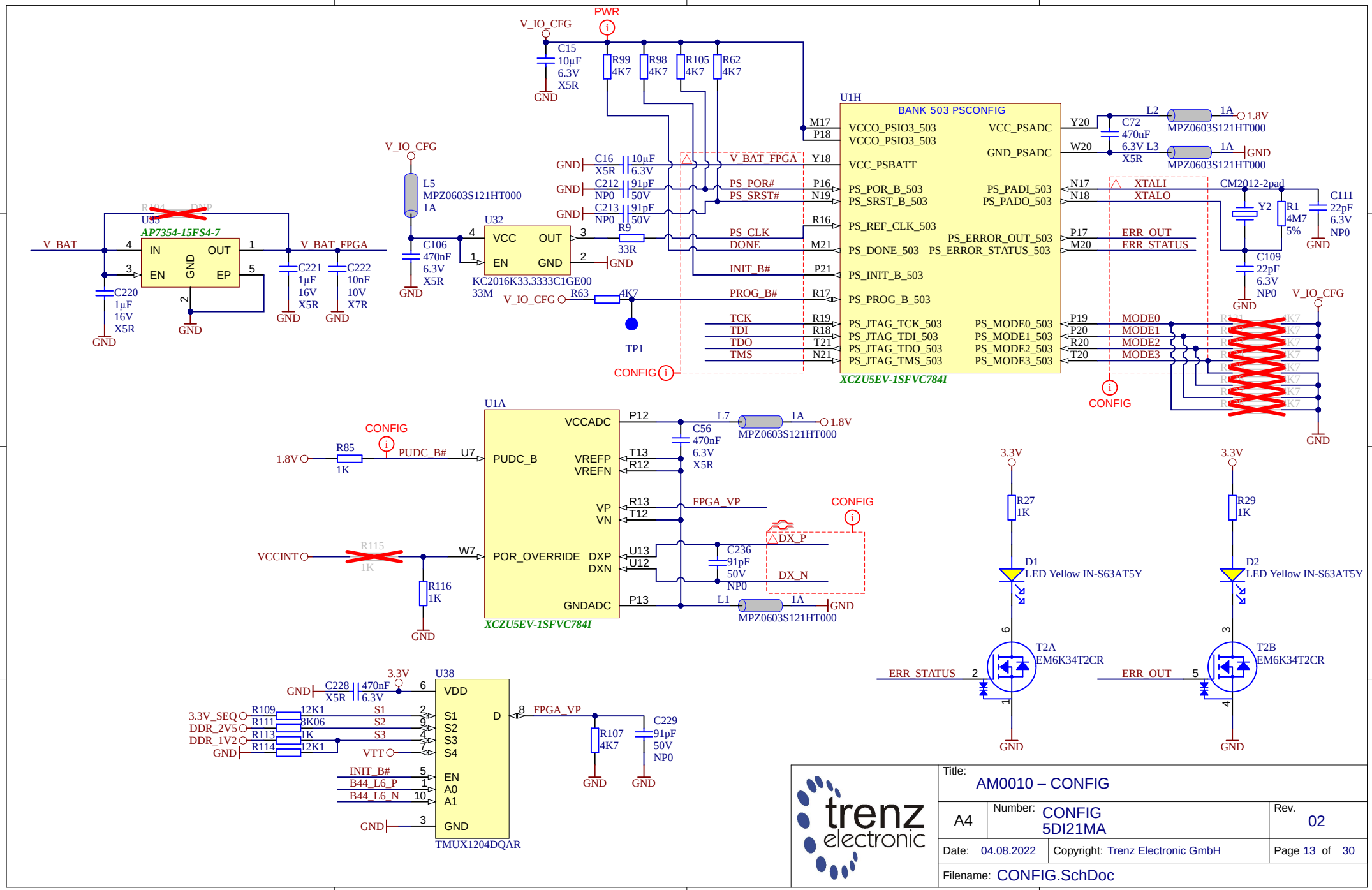

trenz electronic	Title: AM0010 – CONFIG	
A4	Number: CONFIG 5DI21MA	Rev. 02
Date: 04.08.2022	Copyright: Trenz Electronic GmbH	Page 13 of 30
	Filename: CONFIG.SchDoc	

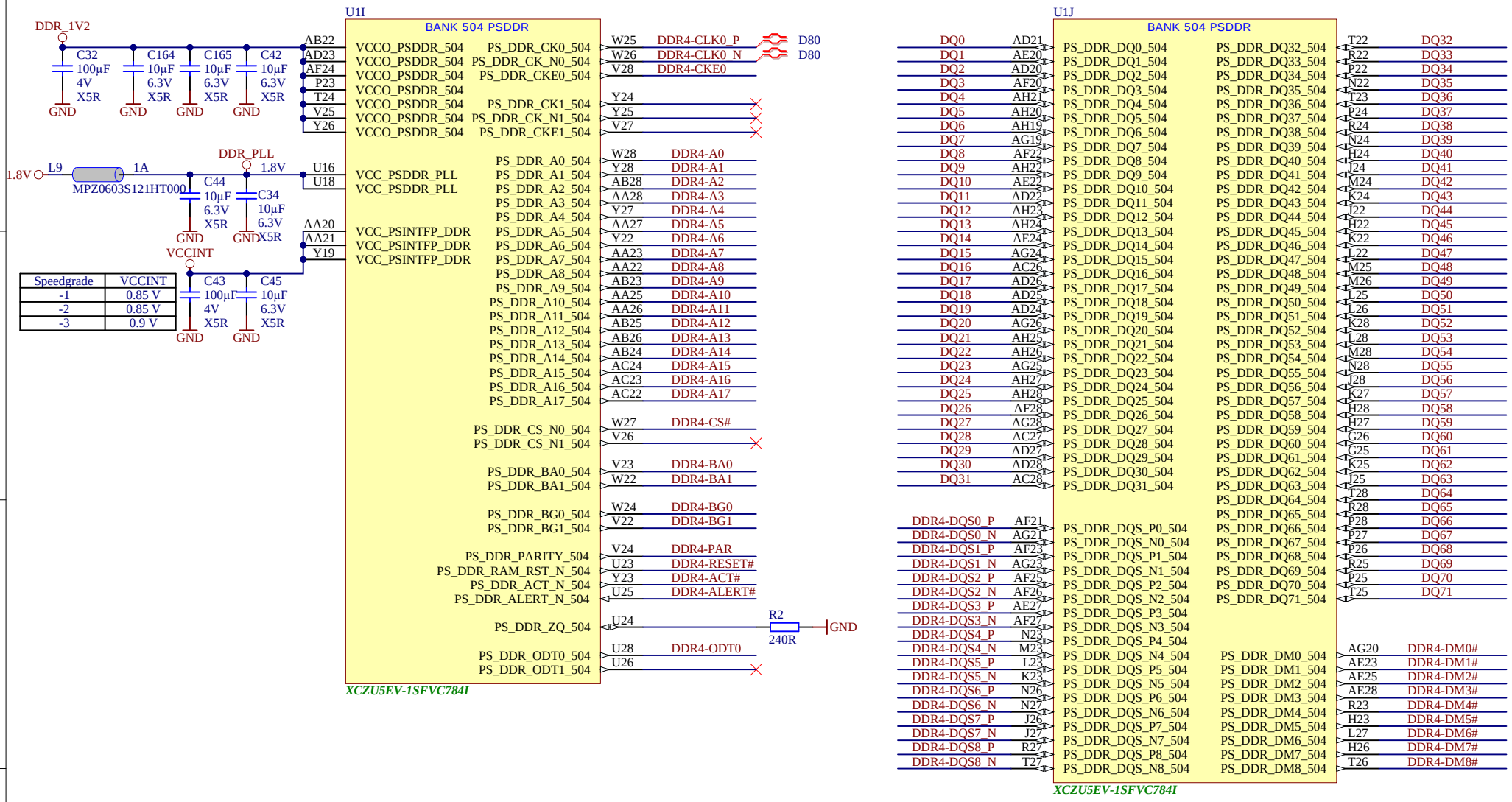

Title:	AM0010 – PS_DDR
A4	Number: PS_DDR 5DI21MA
Rev.	02
Date: 04.08.2022	Copyright: Trenz Electronic GmbH
Page 14 of 30	
Filename:	PS_DDR.SchDoc

Speedgrade	VCCINT
-1	0.85 V
-2	0.85 V
-3	0.9 V

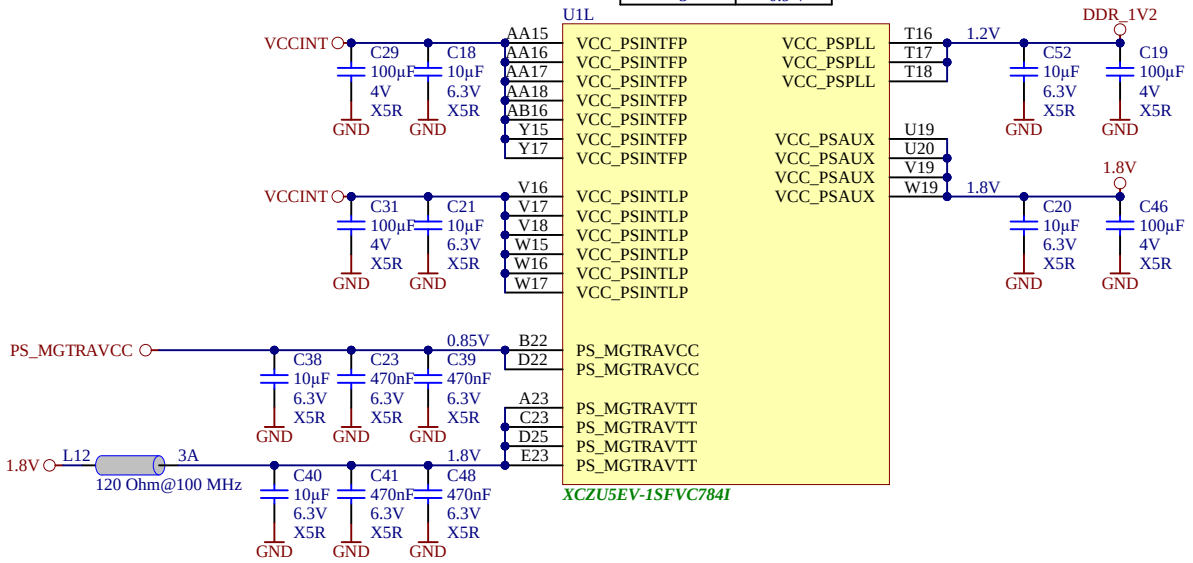

Title: AM0010 – ZU_PS_POWER		
A4	Number: ZU_PS_POWER 5DI21MA	Rev. 02
Date: 04.08.2022	Copyright: Trenz Electronic GmbH	Page 15 of 30
Filename: ZU_PS_POWER.SchDoc		

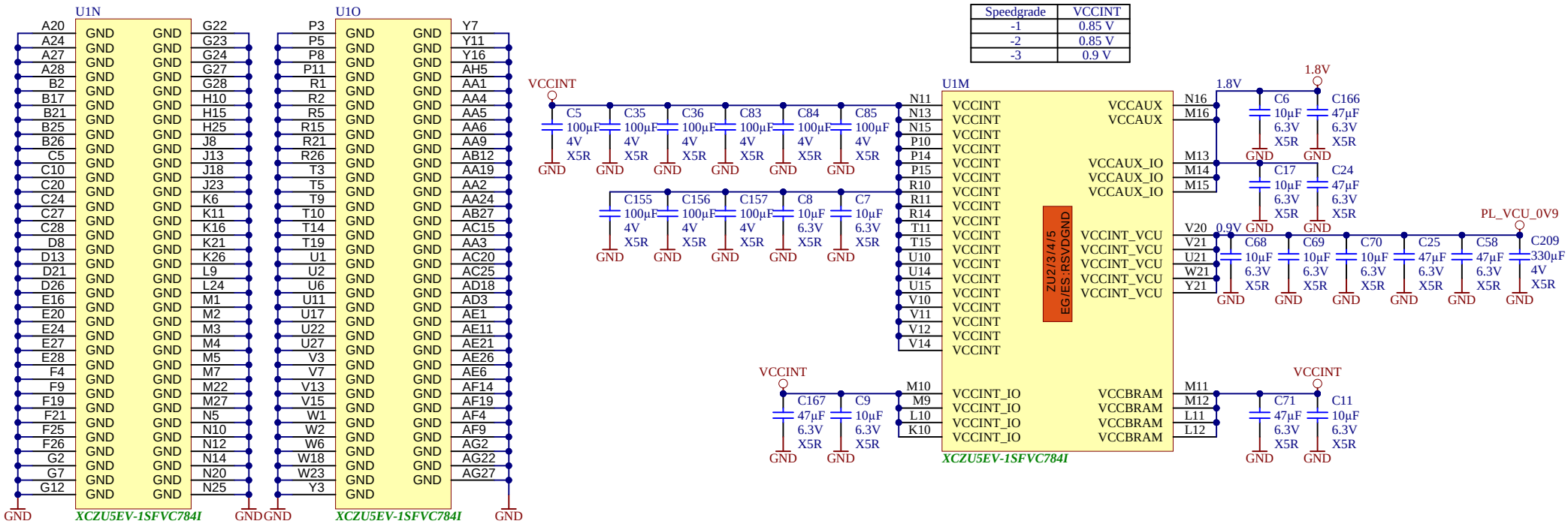

Speedgrade	VCCINT
-1	0.85 V
-2	0.85 V
-3	0.9 V

trenz electronic

Title: AM0010 – ZU_POWER

A4 | Number: ZU_POWER 5DI21MA | Rev. 02

Date: 04.08.2022 | Copyright: Trenz Electronic GmbH | Page 16 of 30

Filename: ZU_POWER.SchDoc

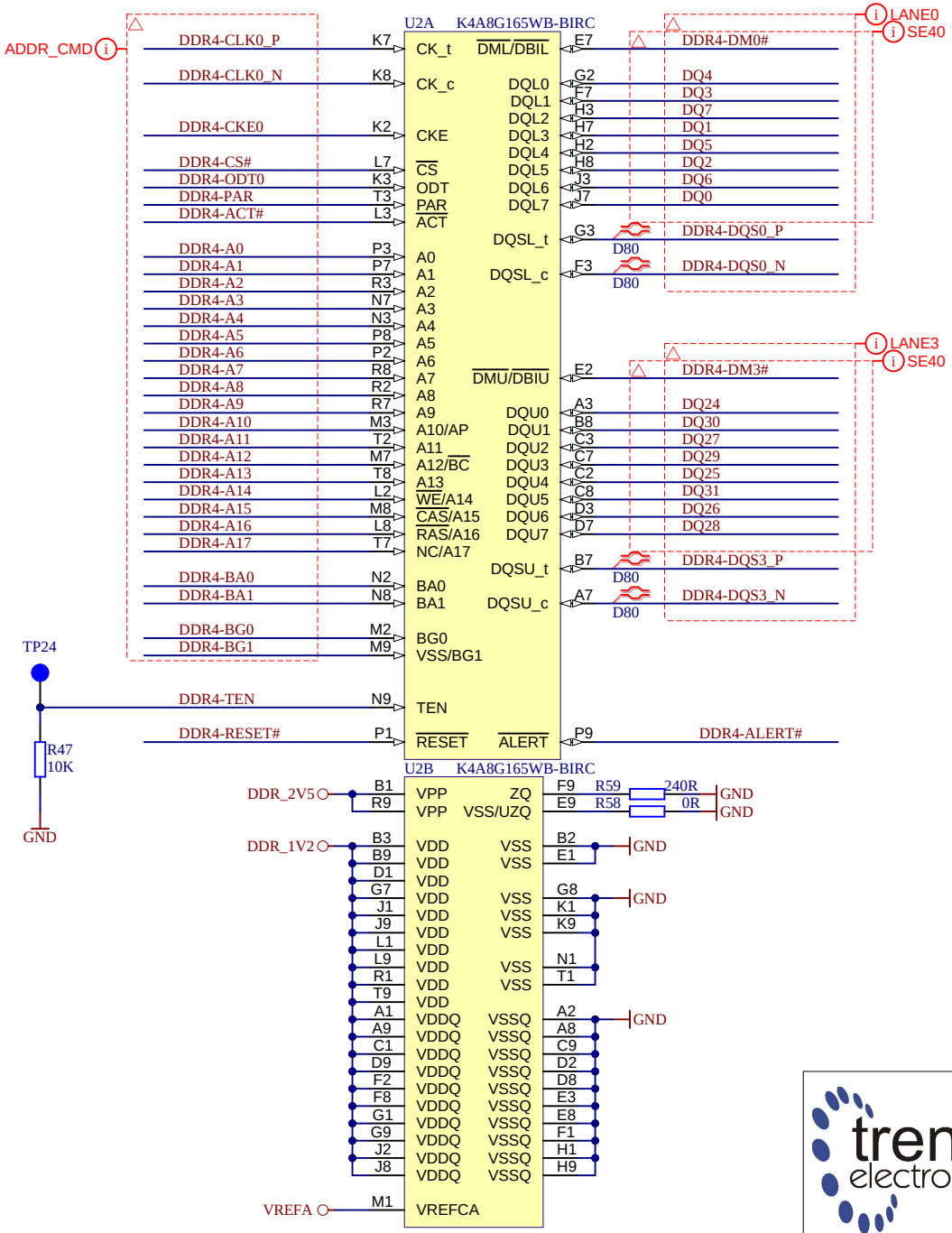

trenz electronic	Title: AM0010 – DDR4-RAM		
A4	Number: DDR4-RAM 5DI21MA		Rev. 02
Date: 04.08.2022	Copyright: Trenz Electronic GmbH		Page 17 of 30
Filename: DDR4-RAM.SchDoc			

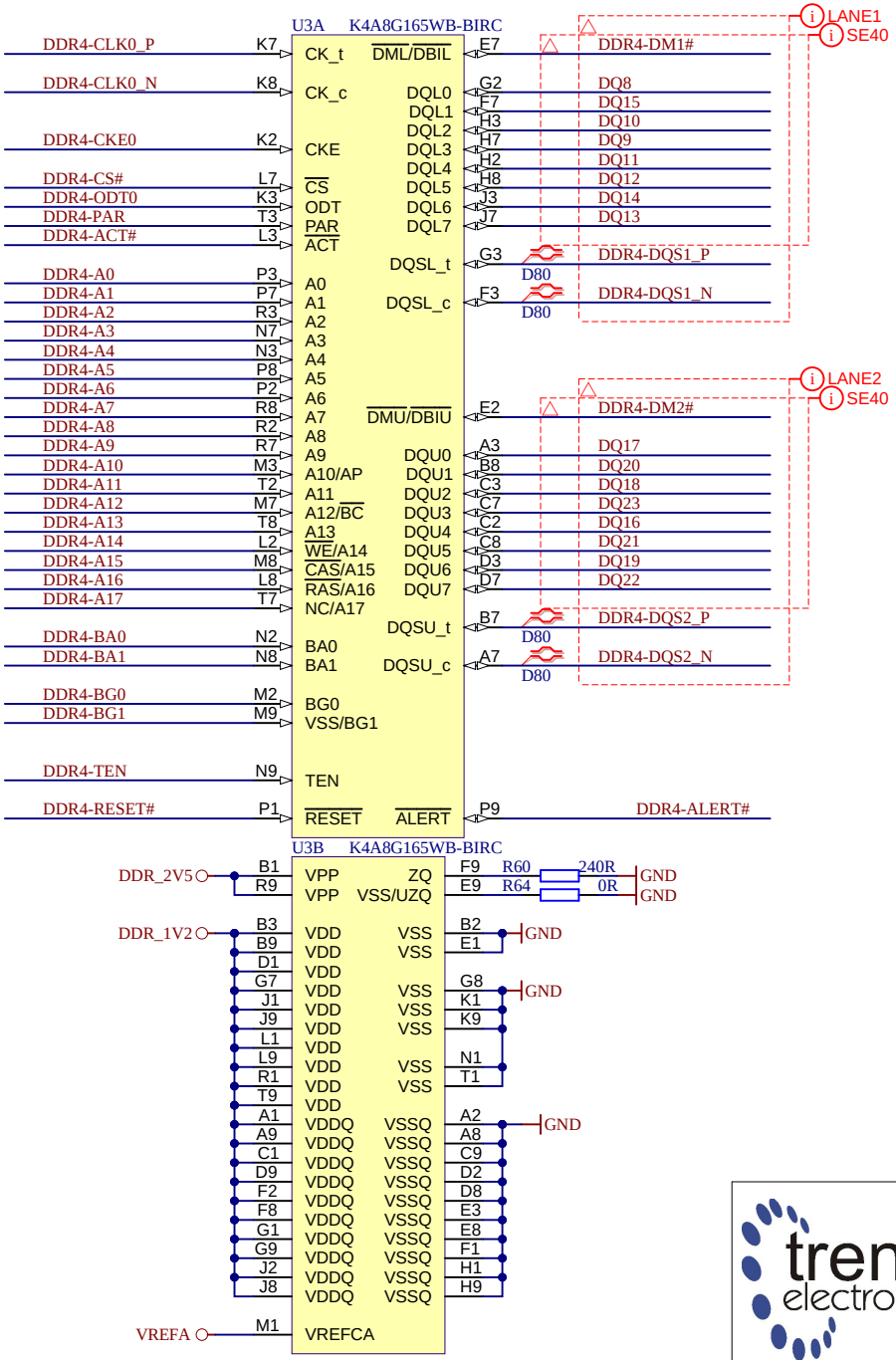

trenz electronic	Title: AM0010 – DDR4-RAM_2	
A4	Number: DDR4-RAM_2 5DI21MA	Rev. 02
Date: 04.08.2022	Copyright: Trenz Electronic GmbH	Page 18 of 30
	Filename: DDR4-RAM_2.SchDoc	

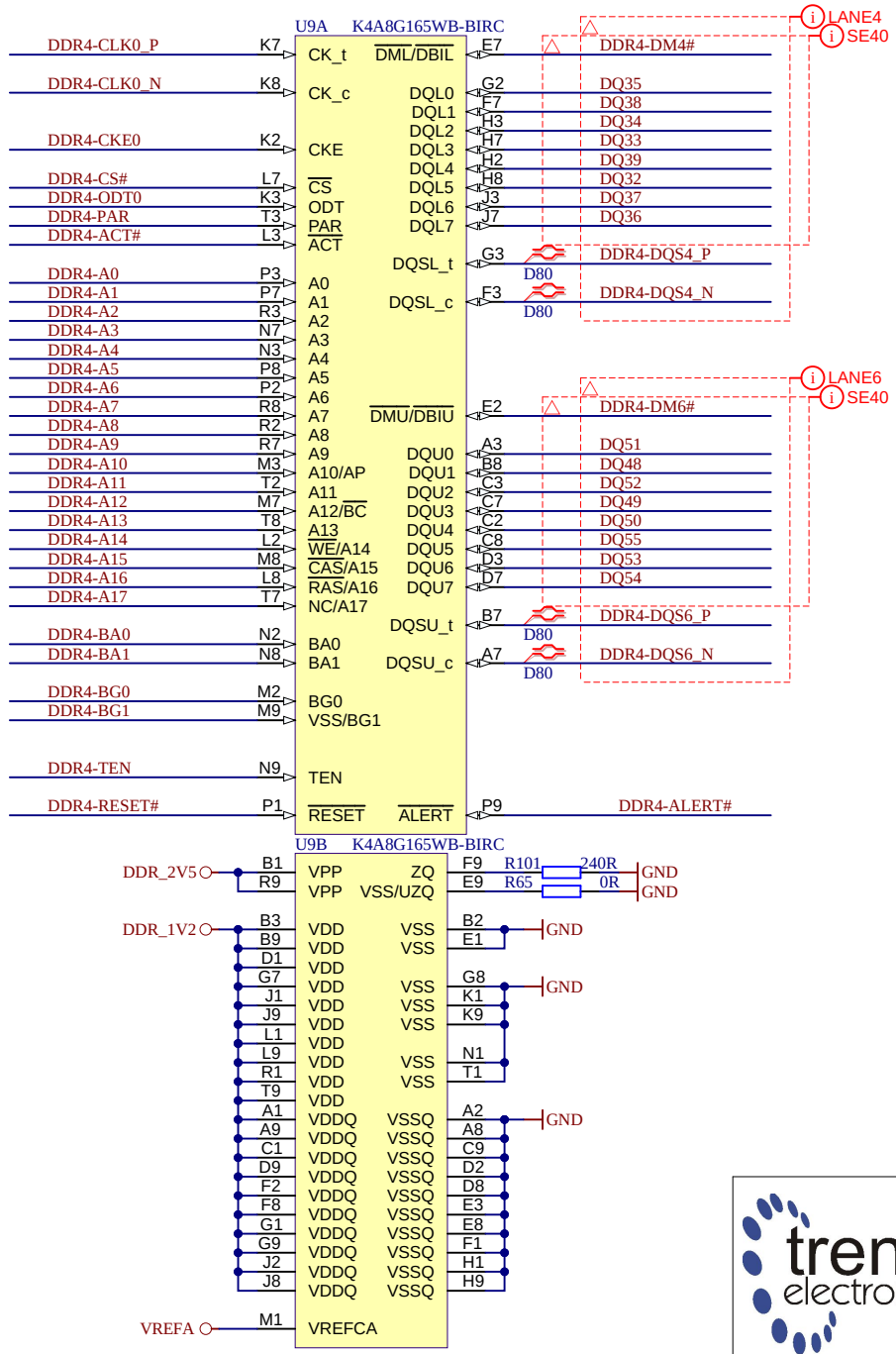

trenz electronic	Title: AM0010 – DDR4-RAM_3		
A4	Number: DDR4-RAM_3 5DI21MA		Rev. 02
Date: 04.08.2022	Copyright: Trenz Electronic GmbH		Page 19 of 30
Filename: DDR4-RAM_3.SchDoc			

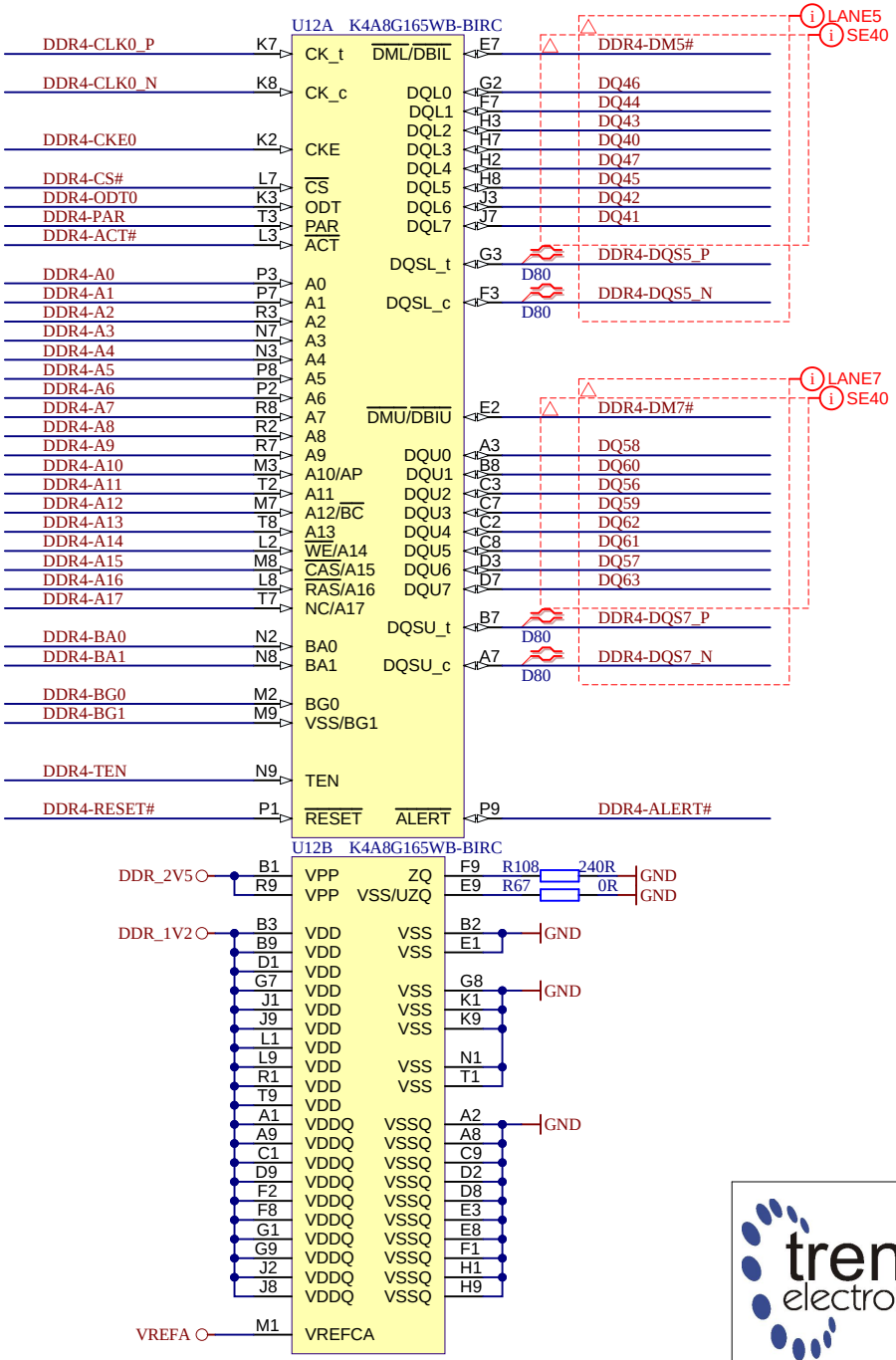

trenz electronic	Title: AM0010 – DDR4-RAM_4		
A4	Number: DDR4-RAM_4 5DI21MA		Rev. 02
Date: 04.08.2022	Copyright: Trenz Electronic GmbH		Page 20 of 30
Filename: DDR4-RAM_4.SchDoc			

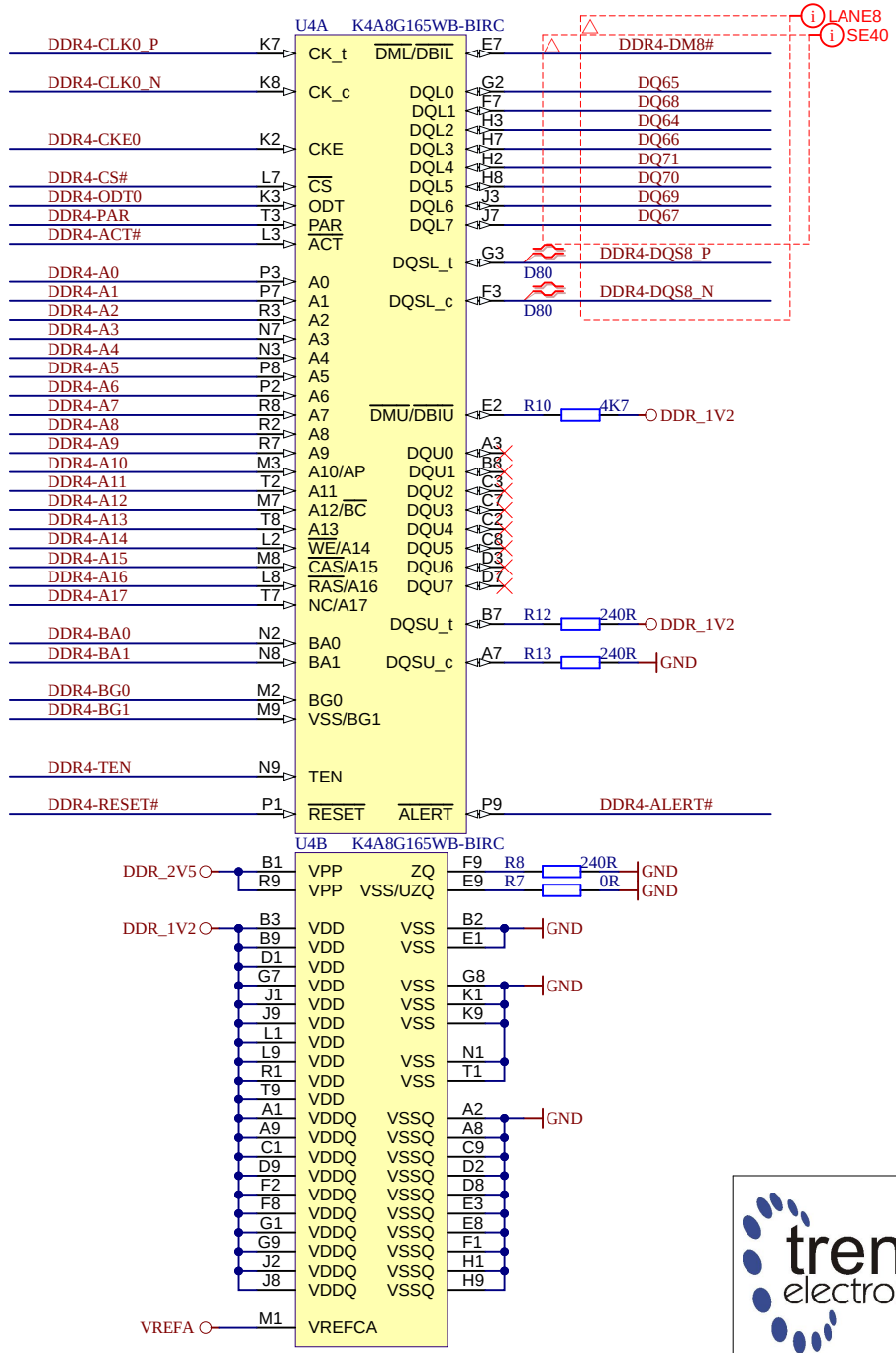

trenz electronic	Title: AM0010 – DDR4-RAM_5		
A4	Number: DDR4-RAM_5 5DI21MA		Rev. 02
Date: 04.08.2022	Copyright: Trenz Electronic GmbH		Page 21 of 30
Filename: DDR4-RAM_5.SchDoc			

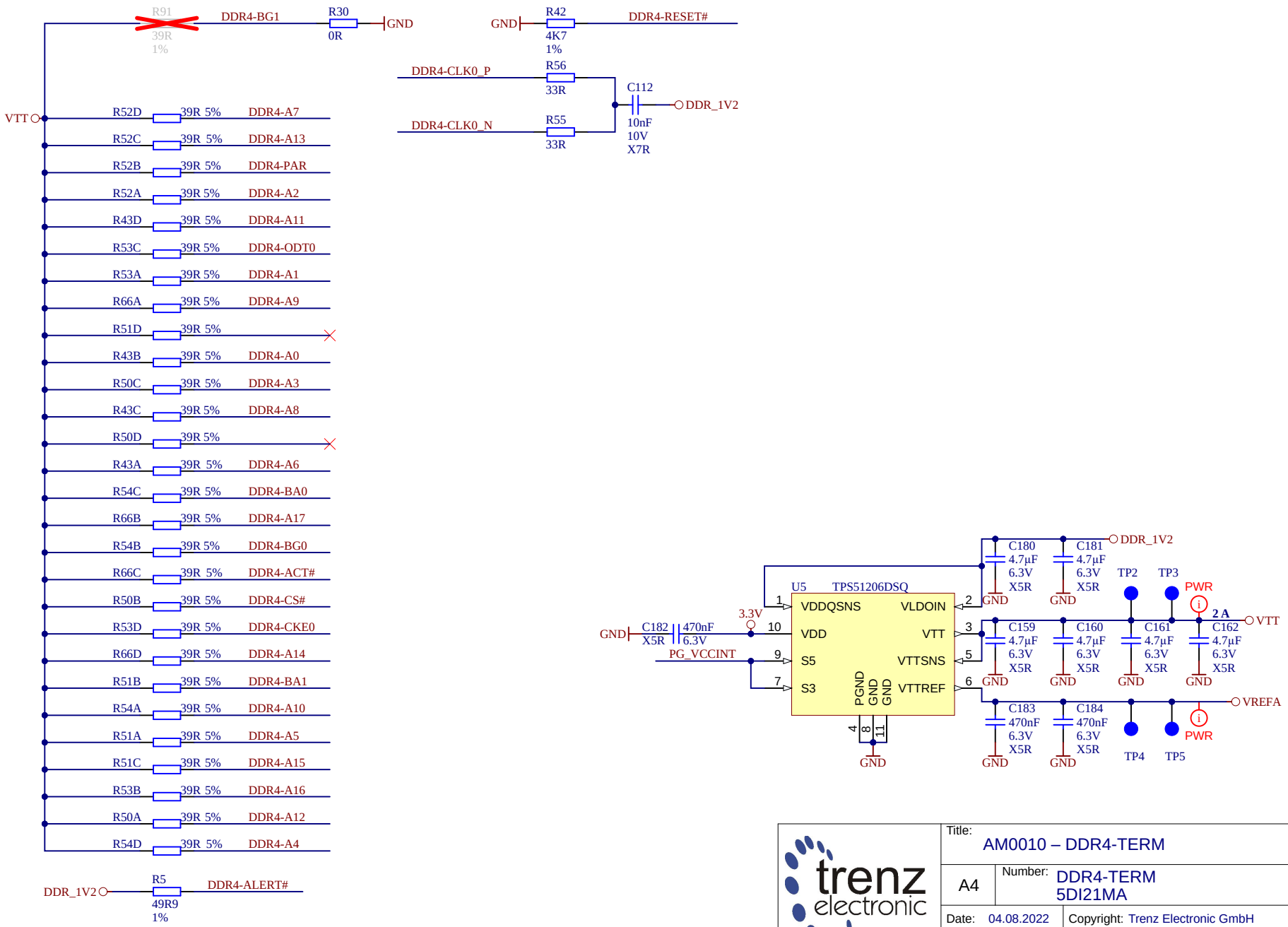

trenz electronic	Title: AM0010 – DDR4-TERM		
A4	Number: DDR4-TERM 5DI21MA		Rev. 02
Date: 04.08.2022	Copyright: Trenz Electronic GmbH		Page 22 of 30
Filename: DDR4-TERM.SchDoc			

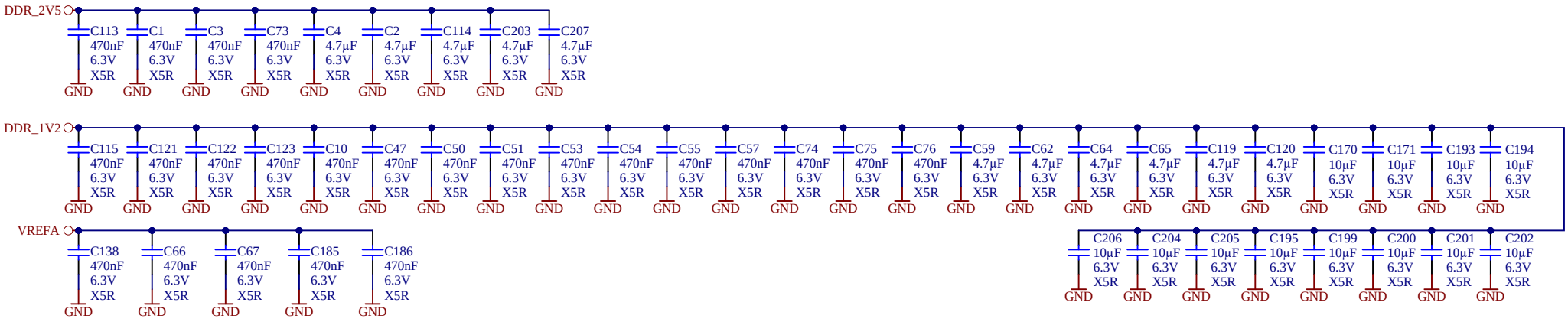

trenz electronic	Title: AM0010 – DDR4-CAPS		
A4	Number: DDR4-CAPS 5DI21MA		Rev. 02
Date: 04.08.2022	Copyright: Trenz Electronic GmbH		Page 23 of 30
Filename: DDR4-CAPS.SchDoc			

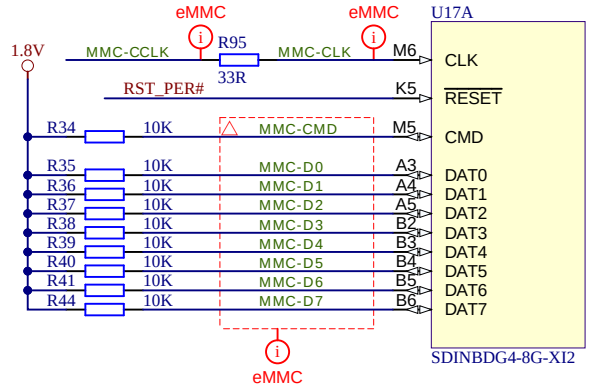

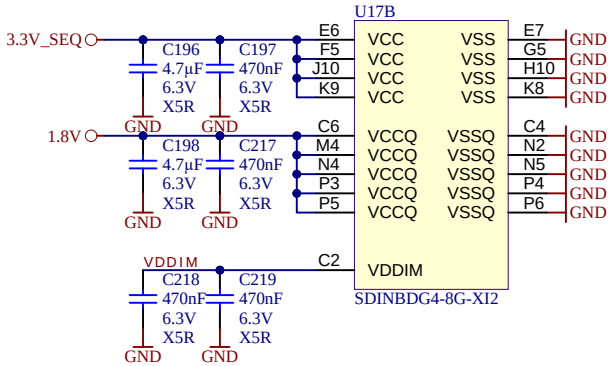

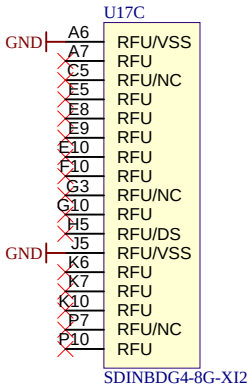

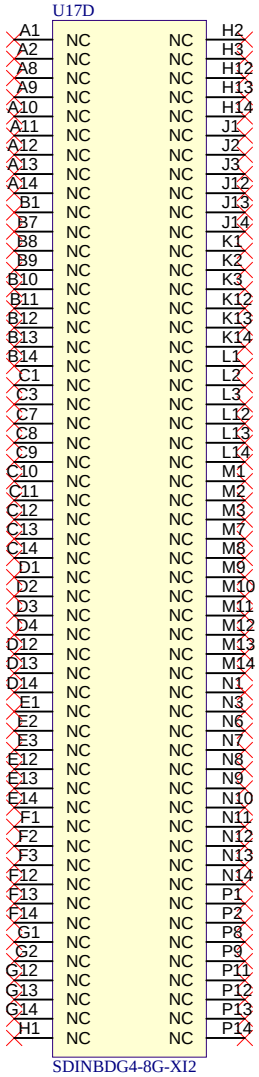

trenz electronic	Title: AM0010 – eMMC		
A4	Number: eMMC 5DI21MA		Rev. 02
Date: 04.08.2022	Copyright: Trenz Electronic GmbH		Page 24 of 30
Filename: eMMC.SchDoc			

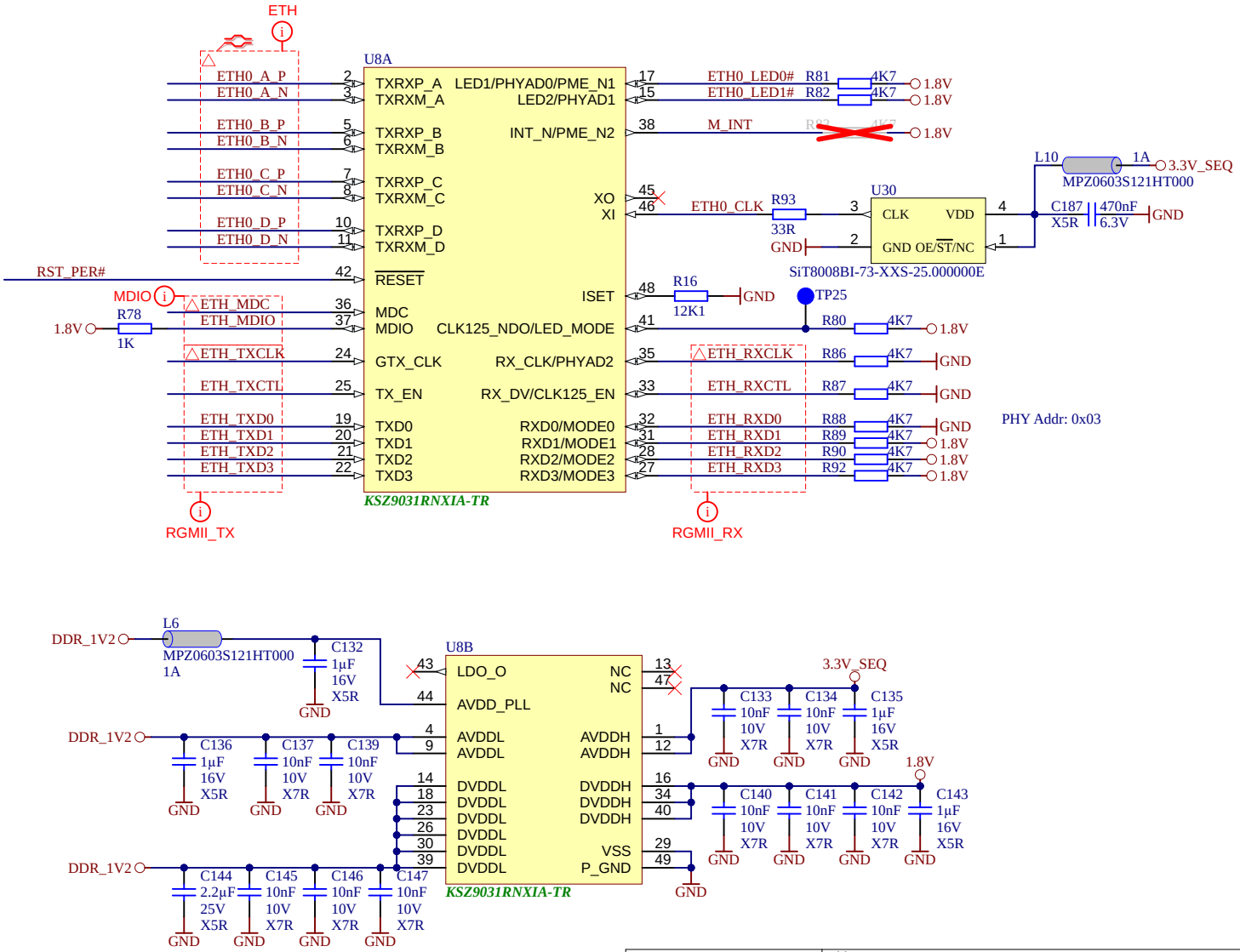

Title: AM0010 – ETHPHY			
A4	Number: ETHPHY 5DI21MA		Rev. 02
Date: 04.08.2022	Copyright: Trenz Electronic GmbH		Page 25 of 30
Filename: ETHPHY.SchDoc			

	USB3320	USB3340
R110	0R	DNP
R112	0R	DNP
C129	4.7 µF	1 µF
C233	0.1 µF	1 µF

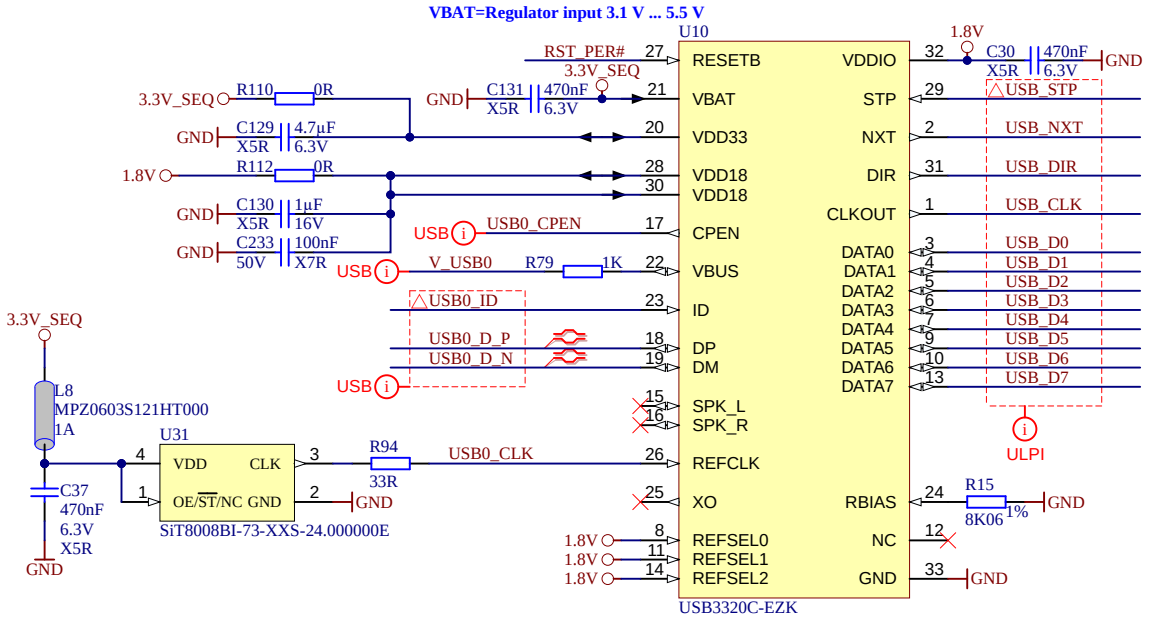

Title: AM0010 – USBPHY		
A4	Number: USBPHY 5DI21MA	Rev. 02
Date: 25.11.2022	Copyright: Trenz Electronic GmbH	Page 26 of 30
Filename: USBPHY.SchDoc		

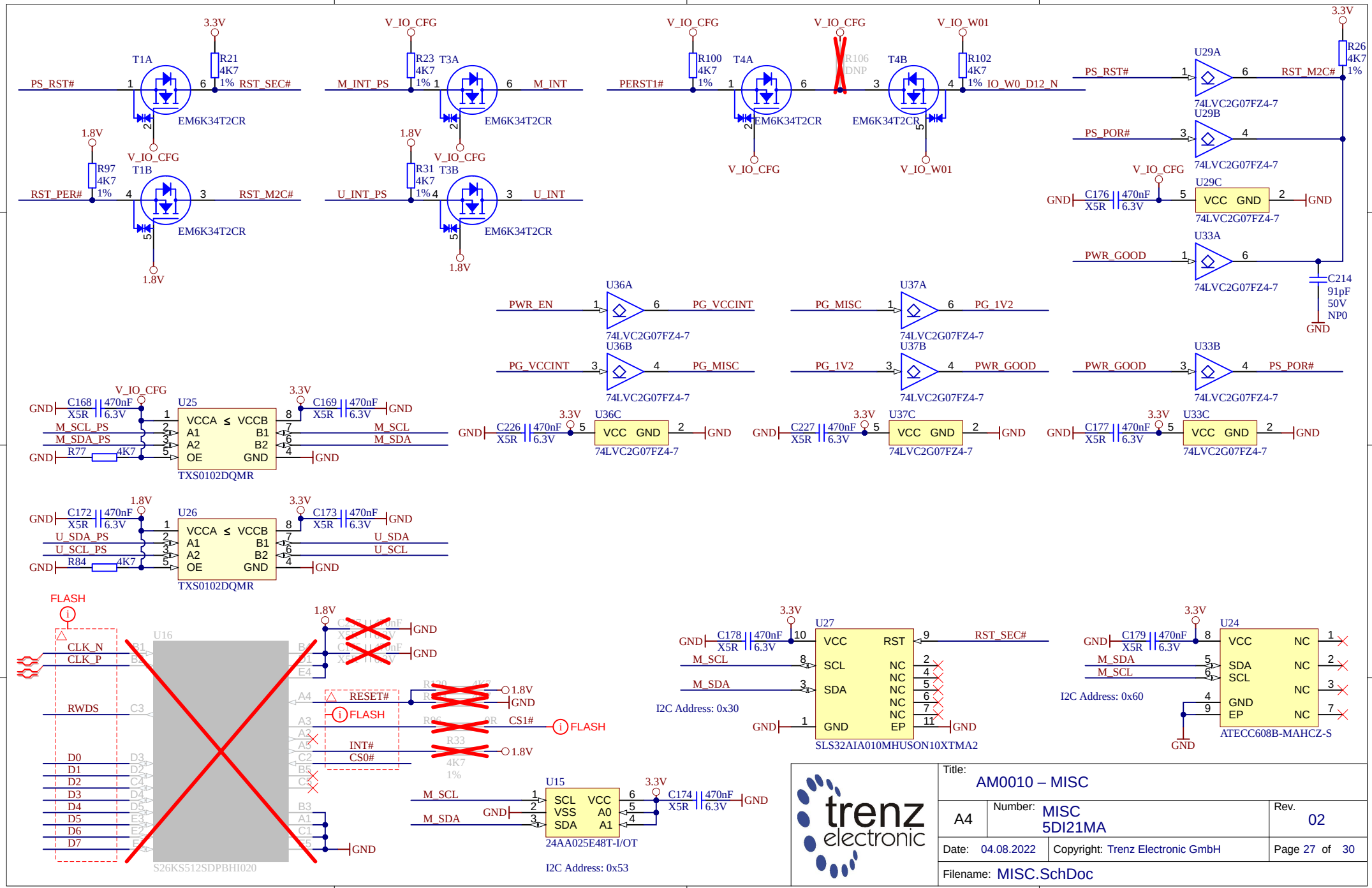
T1A
T1B
T3A
T3B
T4A
T4B
EM6K34T2CR
R21 4K7 1% RST_SEC#
R23 4K7 1% M_INT_PS
R31 4K7 1% U_INT_PS
R97 4K7 1% RST_PER#
R100 4K7 1% PERST1#
R106 DNP
R102 4K7 1% IO_W0_D12_N
R26 4K7 1%
PS_RST# RST_M2C#
PS_POR#
PWR_GOOD
M_INT M_INT_PS
U_INT U_INT_PS
V_IO_CFG
V_IO_W01
3.3V
1.8V
U29A U29B U29C
74LVC2G07FZ4-7
C176 470nF X5R 6.3V
C214 91pF 50V NP0
U33A U33B U33C
U36A U36B U36C
U37A U37B U37C
PWR_EN PG_VCCINT
PG_MISC PG_1V2
C226 470nF X5R 6.3V
C227 470nF X5R 6.3V
C177 470nF X5R 6.3V
U25
U26
TXS0102DQMR
VCCA VCCB A1 B1 A2 B2 OE GND
C168 470nF X5R 6.3V
C169 470nF X5R 6.3V
C172 470nF X5R 6.3V
C173 470nF X5R 6.3V
M_SCL_PS M_SDA_PS
U_SDA_PS U_SCL_PS
M_SCL M_SDA
U_SDA U_SCL
R77 4K7
R84 4K7
GND
FLASH
U16
S26KS512SDPBHI020
CLK_N CLK_P
RWDS
D0 D1 D2 D3 D4 D5 D6 D7
RESET#
CS1#
INT#
CS0#
R33 4K7 1%
U15
24AA025E48T-I/OT
SCL VCC VSS A0 SDA A1
C174 470nF X5R 6.3V
I2C Address: 0x53
U27
SLS32AIA010MHUSON10XTMA2
VCC RST SCL NC SDA NC GND EP
C178 470nF X5R 6.3V
RST_SEC#
I2C Address: 0x30
U24
ATECC608B-MAHCZ-S
VCC NC SDA NC SCL NC GND EP
C179 470nF X5R 6.3V
I2C Address: 0x60
trenz electronic
Title: AM0010 – MISC
A4
Number: MISC 5DI21MA
Rev. 02
Date: 04.08.2022
Copyright: Trenz Electronic GmbH
Page 27 of 30
Filename: MISC.SchDoc

Power Supply Structure

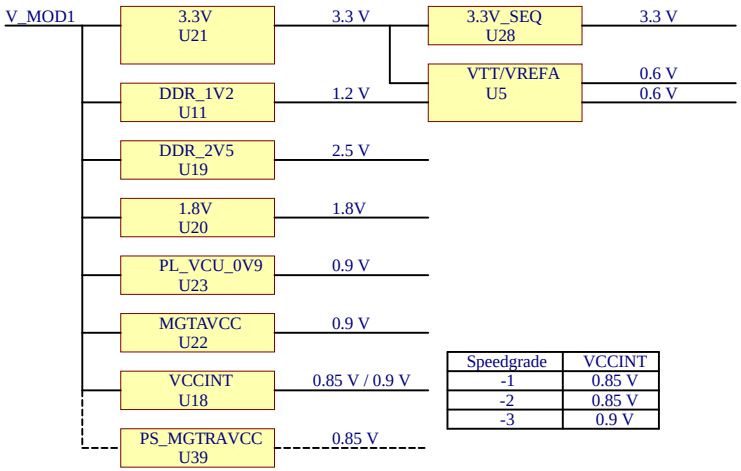

Speedgrade	VCCINT
-1	0.85 V
-2	0.85 V
-3	0.9 V

Power Supply Sequencing

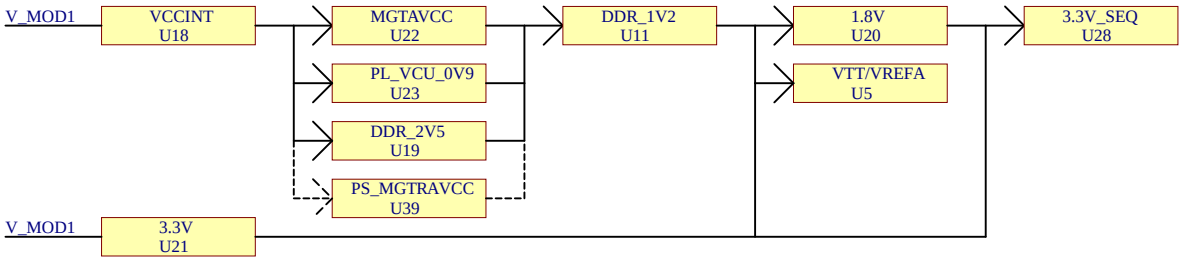

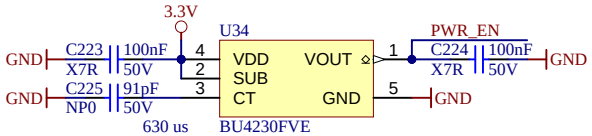

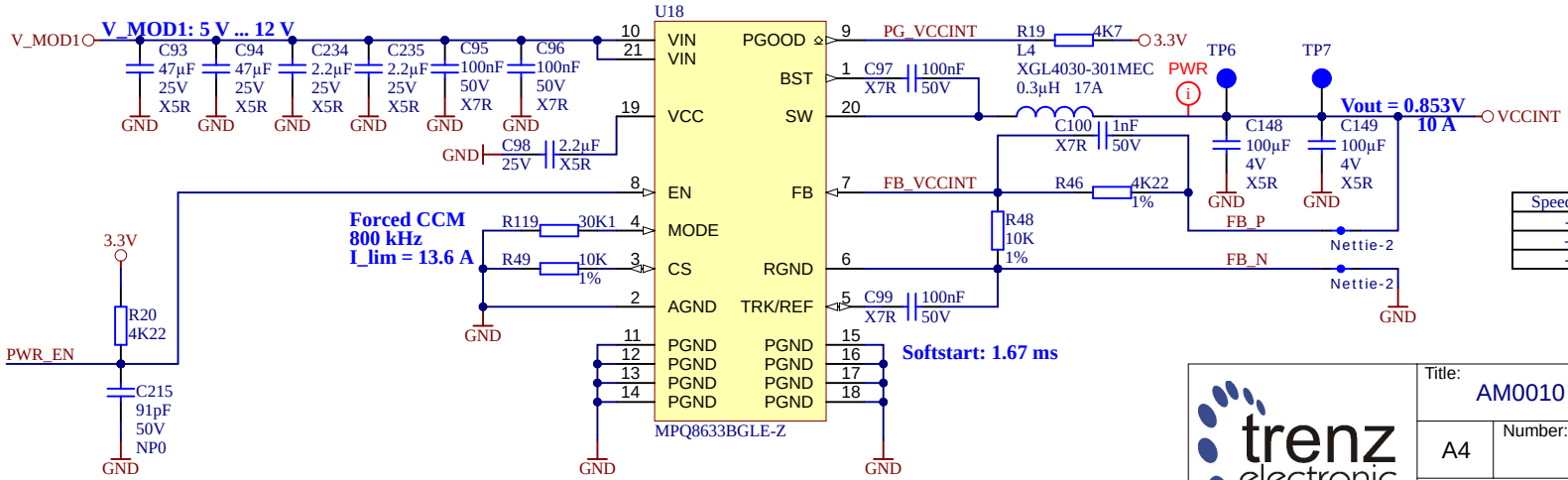

Speedgrade	R46	R48	C100	VCCINT
-1	4K22	10K	1 nF	0.853 V
-2	4K22	10K	1 nF	0.853 V
-3	10K	20K	680 pF	0.900 V

trenz electronic

Title: AM0010 – POWER_1		
A4	Number: POWER_1 5DI21MA	Rev. 02
Date: 02.09.2022	Copyright: Trenz Electronic GmbH	Page 28 of 30
Filename: POWER_1.SchDoc		

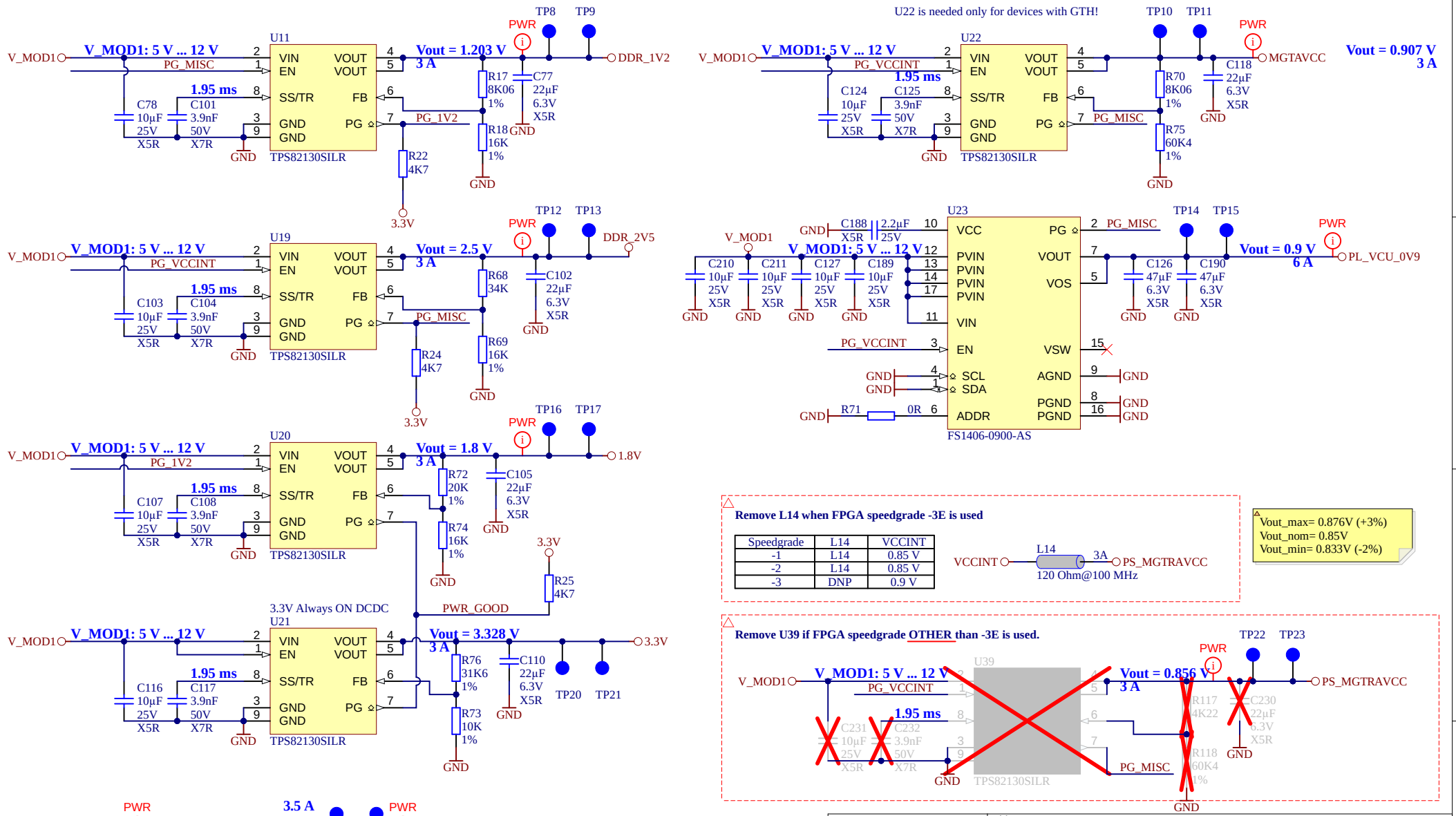
U11
V_MOD1: 5 V ... 12 V
Vout = 1.203 V
3 A
TP8
TP9
DDR_1V2
PG_MISC
PG_1V2
1.95 ms
C78 10µF 25V X5R
C101 3.9nF 50V X7R
R17 8K06 1%
C77 22µF 6.3V X5R
R18 16K 1%
R22 4K7
3.3V
TPS82130SILR
U19
V_MOD1: 5 V ... 12 V
Vout = 2.5 V
3 A
TP12
TP13
DDR_2V5
PG_VCCINT
PG_MISC
C103 10µF 25V X5R
C104 3.9nF 50V X7R
R68 34K
C102 22µF 6.3V X5R
R69 16K 1%
R24 4K7
U20
V_MOD1: 5 V ... 12 V
Vout = 1.8 V
3 A
TP16
TP17
1.8V
PG_1V2
C107 10µF 25V X5R
C108 3.9nF 50V X7R
R72 20K 1%
C105 22µF 6.3V X5R
R74 16K 1%
R25 4K7
PWR_GOOD
3.3V Always ON DCDC
U21
V_MOD1: 5 V ... 12 V
Vout = 3.328 V
3 A
3.3V
C116 10µF 25V X5R
C117 3.9nF 50V X7R
R76 31K6 1%
C110 22µF 6.3V X5R
TP20
TP21
R73 10K 1%
U28
3.5 A
3.3V_SEQ
TP18
TP19
C150 4.7µF 6.3V X5R
PWR_GOOD
C216 91pF 50V NP0
SIP32408DNP-T1-GE4
C151 470nF 6.3V X5R
U22 is needed only for devices with GTH!
U22
V_MOD1: 5 V ... 12 V
Vout = 0.907 V
3 A
TP10
TP11
MGTAVCC
PG_VCCINT
PG_MISC
C124 10µF 25V X5R
C125 3.9nF 50V X7R
R70 8K06 1%
C118 22µF 6.3V X5R
R75 60K4 1%
U23
V_MOD1
C188 2.2µF 25V X5R
C210 10µF 25V X5R
C211 10µF 25V X5R
C127 10µF 25V X5R
C189 10µF 25V X5R
Vout = 0.9 V
6 A
TP14
TP15
PL_VCU_0V9
C126 47µF 6.3V X5R
C190 47µF 6.3V X5R
PG_VCCINT
R71 0R
FS1406-0900-AS
Remove L14 when FPGA speedgrade -3E is used
Speedgrade | L14 | VCCINT
-1 | L14 | 0.85 V
-2 | L14 | 0.85 V
-3 | DNP | 0.9 V
VCCINT
L14
120 Ohm@100 MHz
PS_MGTRAVCC
Vout_max= 0.876V (+3%)
Vout_nom= 0.85V
Vout_min= 0.833V (-2%)
Remove U39 if FPGA speedgrade OTHER than -3E is used.
U39
Vout = 0.856 V
3 A
TP22
TP23
C231 10µF 25V X5R
C232 3.9nF 50V X7R
R117 4K22
C230 22µF 6.3V X5R
R118 60K4 1%
trenz electronic
Title: AM0010 – POWER_2
A4
Number: POWER_2 5DI21MA
Rev. 02
Date: 25.11.2022
Copyright: Trenz Electronic GmbH
Page 29 of 30
Filename: POWER_2.SchDoc

REV	Description	
-01	Initial revision	AL/ED
-02	1. Added VRM U39 (C230...2, R117...8) to supply PS_MGTRAVCC in case of speed grade -3E SoC.	MST/DSC
	2. Added L14 in case of speed grade -1 or -2 SoC.	MST/DSC
	3. Replaced VRM U18 by MPQ8633BGLE-Z.	MST/DSC
	4. Updated power supply structure and sequencing.	MST/DSC
	5. Added testpoint (TP24) and pull down resistor (R47) to connected TEN inputs (N9) of DDR4 RAM chips (U2...4, U9, U12).	MST/DSC
	6. Updated pictures at "Legal Notices Modules.SchDoc".	MST/DSC
	7. Removed R32.	ED
	8. Changed R68 from 21K5 to 34K.	ED
	9. Changed R69 from 10K to 16K.	ED
	10. Changed R72 from 27K to 20K.	ED
	11. Changed R74 from 21K5 to 16K.	ED
	12. Changed R76 from 21K5 to 31K6.	ED
	13. Changed R73 from 10K 0201 to 10K 0402.	ED
	14. Removed R45.	ED
	15. Set HyperRAM/Flash (U16, C175, R103, R96) as optional (not assembled).	ED
	16. Changed R20 from 4K7 0201 to 4K22 0402.	ED
	17. Changed C98 from 10 nF 0201 to 2.2 µF 0402.	ED
	18. Added C234 and C235.	ED
	19. Changed C99 from 91 nF to 100 nF.	ED
	20. Changed C97 from 100 nF 25 V to 100 nF 50V.	ED
	21. Changed U10 from USB3340 to USB3320.	ED
	22. Changed C129 from 1 µF to 4.7 µF.	ED
	23. Added capacitor C236.	ED
	24. Added pull-up resistor R120.	ED
	25. Changed U16 RFU pins B5 and C5 from GND connection to floating.	ED
	26. Added pull-up/down resistor option for MODE3...0 pins (R121...R128).	ED
	27. Added testpoint TP25.	ED
	28. Added UKCA logo.	ED
	29. Added capacitor C237.	ED
	30. Swapped schematic sheet numbers 21 and 22.	ED
	31. Changed capacitors C95, C96, C223, C224, and C233 from 100 nF 25 V X5R to 50 V X7R.	ED
	32. Changed ferrid beads L11...L13 from MPZ1608S221A to BLM18SG121TN1D.	ED