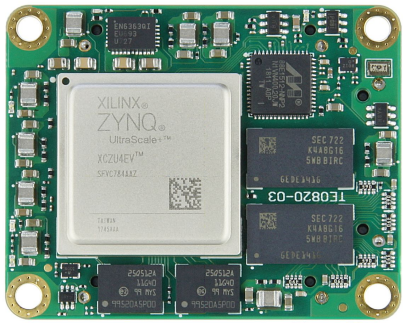

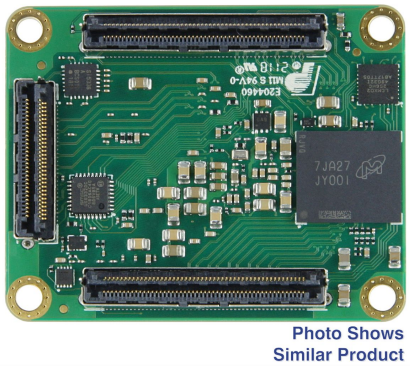

Regarding the usage of our schematics and alike documentation for Trenz module TE0820.

Project is protected under copyright and we strongly and strictly prohibit the reverse engineering or recreation, even if the design is just adapted or modified. TE0820is protected under such right and in case of plagiarism we will have to do anything necessary in order to protect our assets.

Schematics and other handouts serve for informational purposes only!

trenz electronic	Title: TE0820 - Legal Notices		
A4	Number: TE0820 2BE21MA		Rev. 04
Date: 2020-07-16	Copyright: Trenz Electronic GmbH / TT		Page 1 of 23
Filename: Legal Notices Modules.SchDoc			

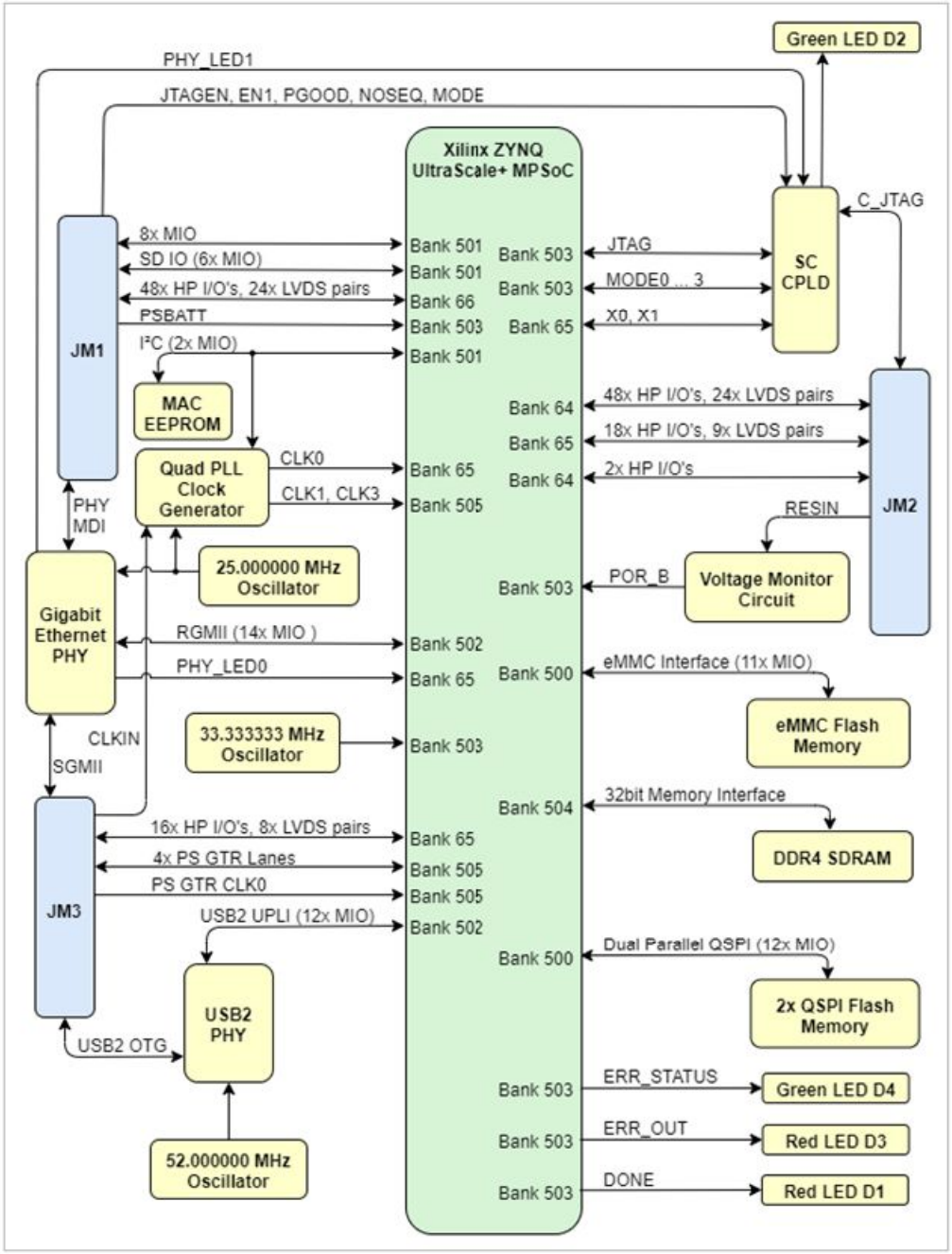

trenz electronic	Title: TE0820 - System Overview		
A4	Number: TE0820 2BE21MA		Rev. 04
Date: 2020-10-20	Copyright: Trenz Electronic GmbH		Page 2 of 23
Filename: Overview.SchDoc			

U_USB-PHY
USB-PHY.SchDoc

U_ETH-PHY
ETH-PHY.SchDoc

U_B_HD
B_HD.SchDoc

U_B64
B64.SchDoc

U_B65
B65.SchDoc

U_B66
B66.SchDoc

U_CONFIG
CONFIG.SchDoc

U_B_MIO
B_MIO.SchDoc

U_B_PS_GT
B_PS_GT.SchDoc

U_CLK
CLK.SchDoc

U_BD
Overview.SchDoc

U_B2B-Connectors
B2B-Connectors.SchDoc

U_eMMC
eMMC.SchDoc

U_PS_DDR
PS_DDR.SchDoc

U_ZU_POWER
ZU_POWER.SchDoc

U_ZU_PS_POWER
ZU_PS_POWER.SchDoc

U_DDR4-RAM_2
DDR4-RAM_2.SchDoc

U_DDR4-RAM
DDR4-RAM.SchDoc

U_POWER
POWER.SchDoc

U_POWER_1
POWER_1.SchDoc

U_REV_CH
Revision Changes.SchDoc

U_LN
Legal Notices Modules.SchDoc

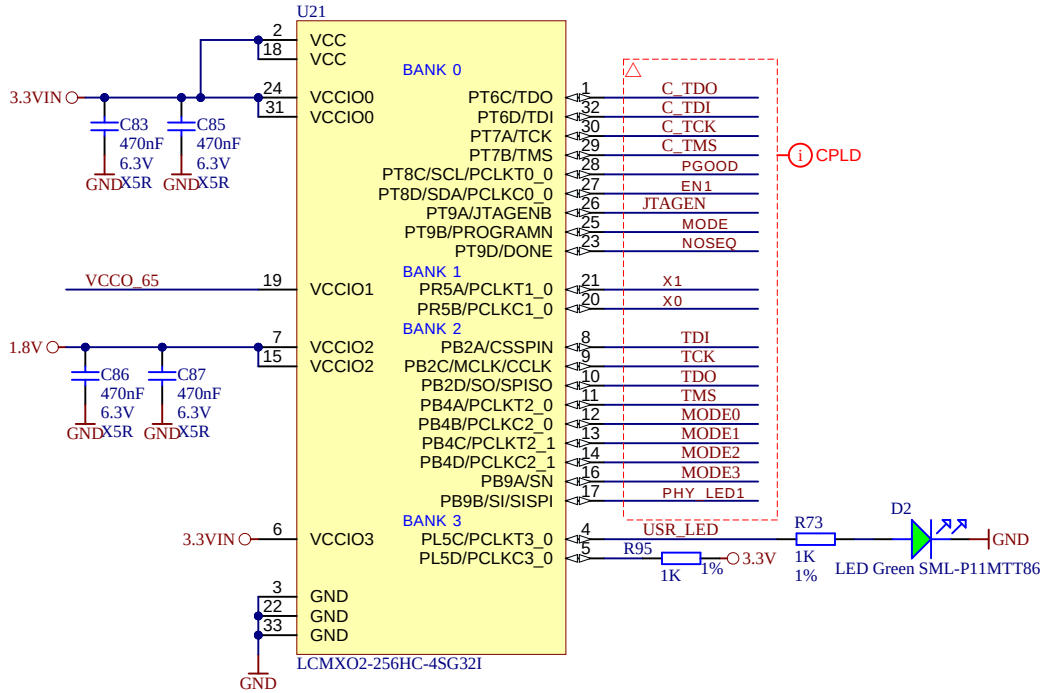

Special notes:

Serial
Serial
Serialnumber 6,3 x 6.3mm

PM1 PM2 PM3 PM4 PM5 PM6

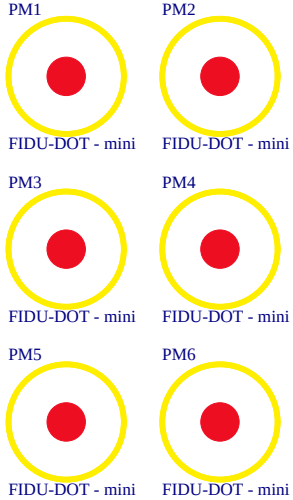

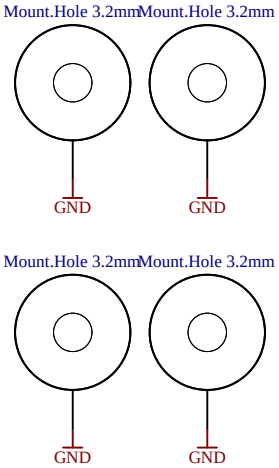

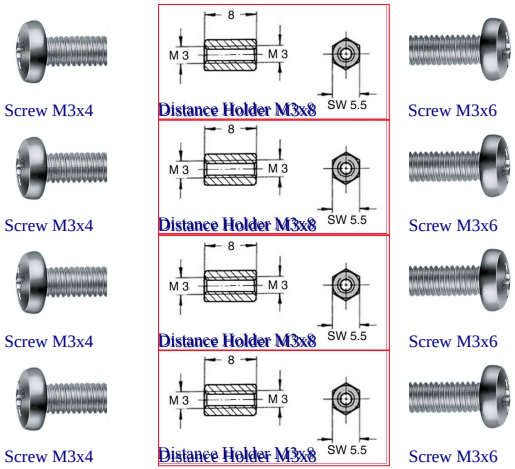

Assembly variant	2BE21MA
Created by	RM
Modified by	RM
Modified at	2021-07-22
SVN Revision	12571

trenz electronic

Title:	TE0820		
A4	Number: TE0820 2BE21MA		Rev. 04
Date: 2020-07-16	Copyright: 2015 Trenz Electronic GmbH		Page3 of 23
Filename:	TE0820.SchDoc		

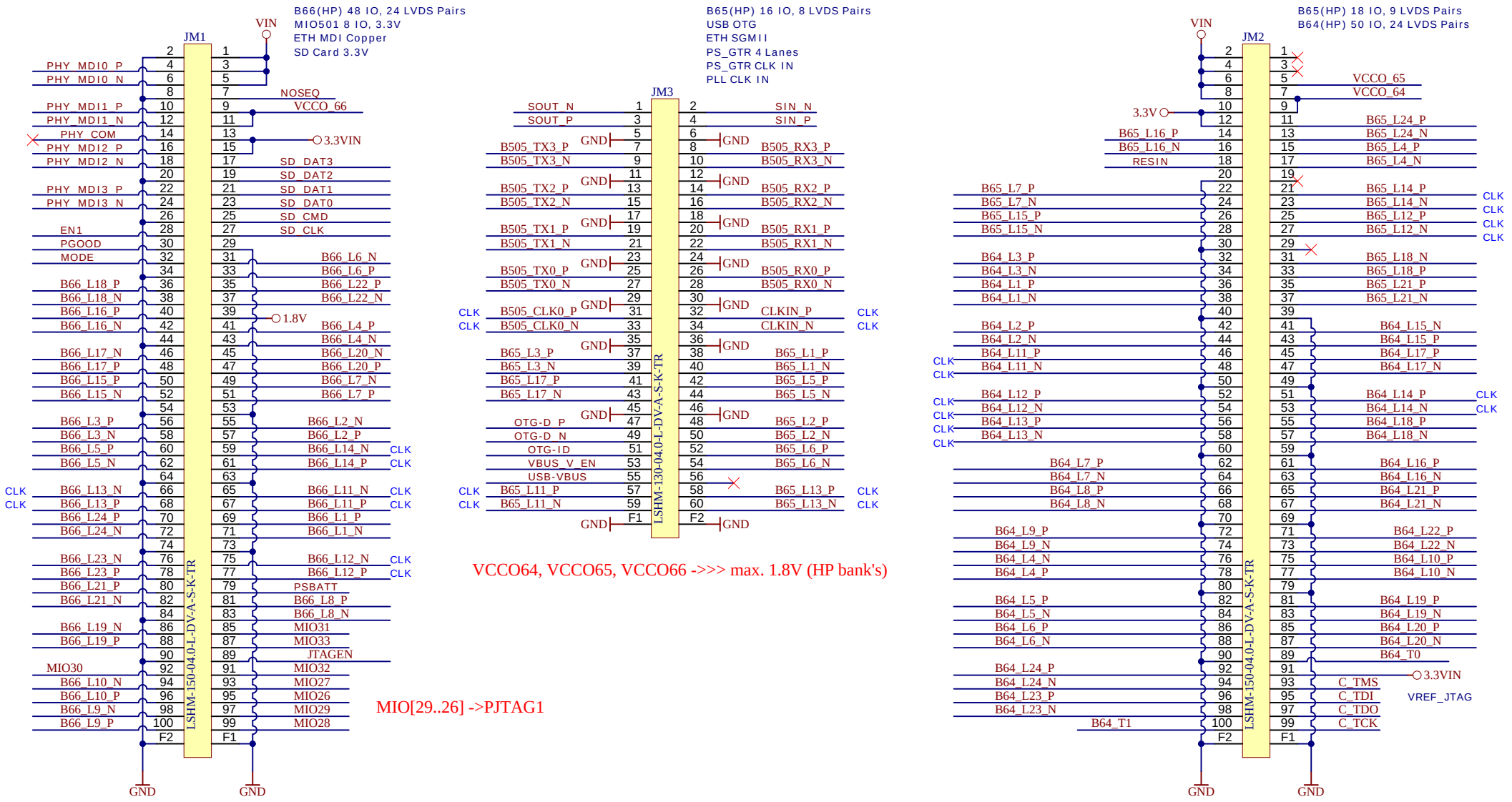

trenz electronic	Title: TE0820 - B2B Connectors		
A4	Number: TE0820 2BE21MA		Rev. 04
Date: 2020-07-16	Copyright: 2015 Trenz Electronic GmbH		Page4 of 23
Filename: B2B-Connectors.SchDoc			

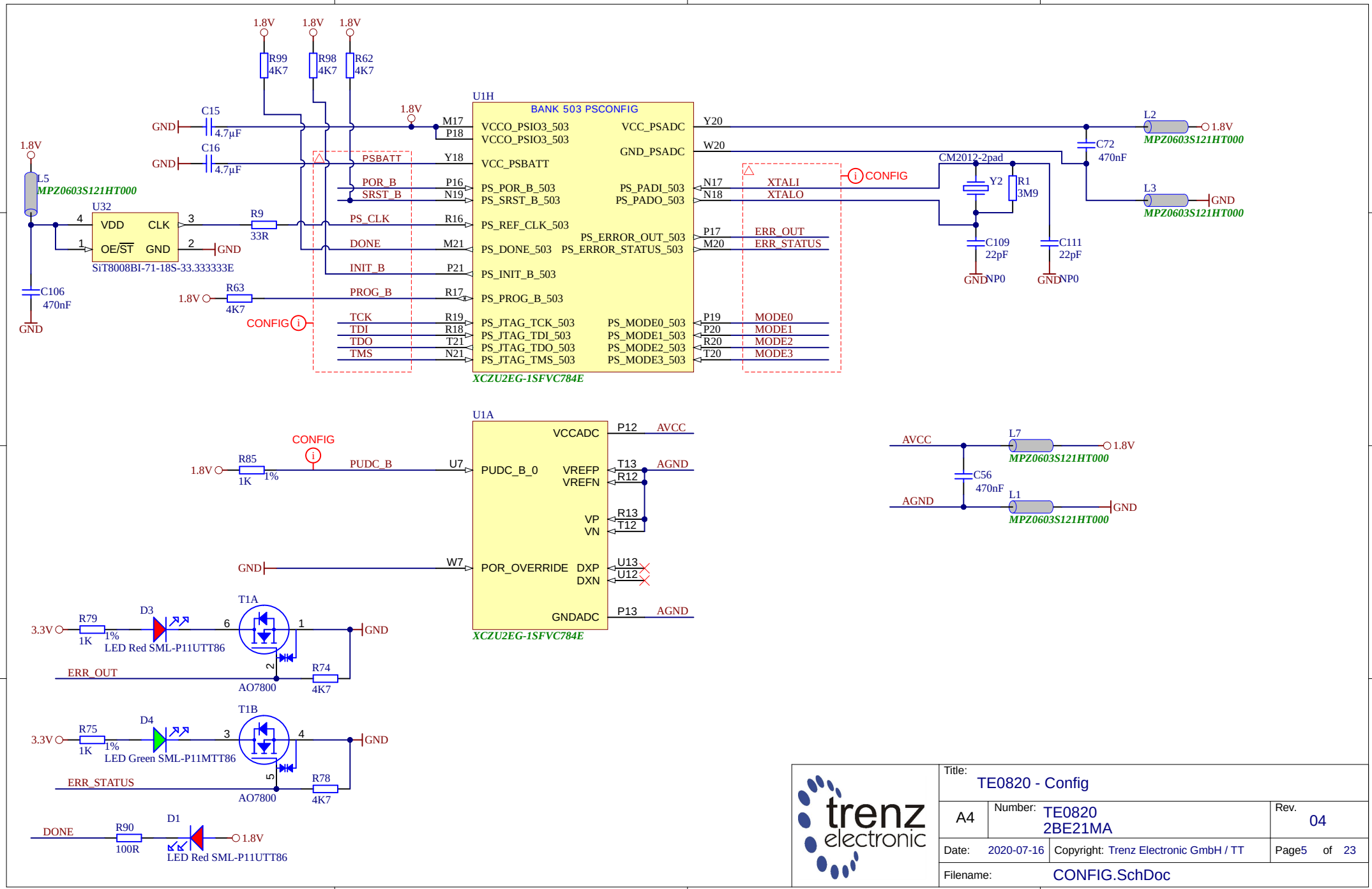

trenz electronic	Title: TE0820 - Config		
A4	Number: TE0820 2BE21MA		Rev. 04
Date: 2020-07-16	Copyright: Trenz Electronic GmbH / TT		Page5 of 23
Filename: CONFIG.SchDoc			

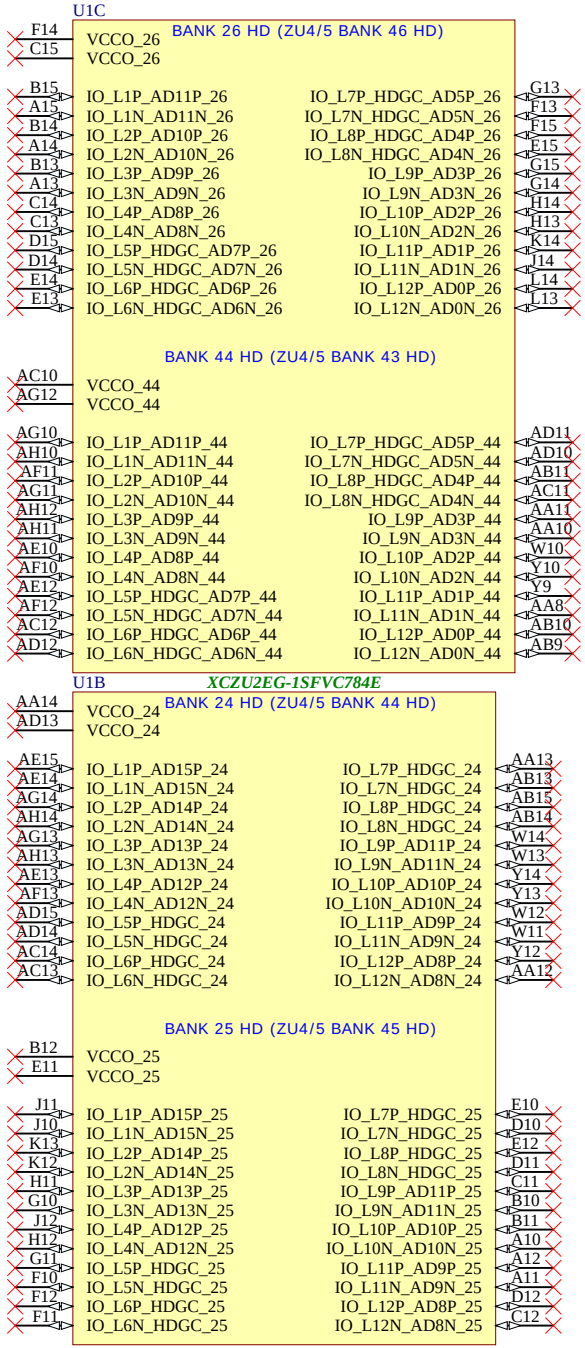

trenz electronic	Title: TE0820 - HD Banks		
A4	Number: TE0820 2BE21MA		Rev. 04
Date: 2020-07-16	Copyright: Trenz Electronic GmbH / TT		Page6 of 23
Filename: B_HD.SchDoc			

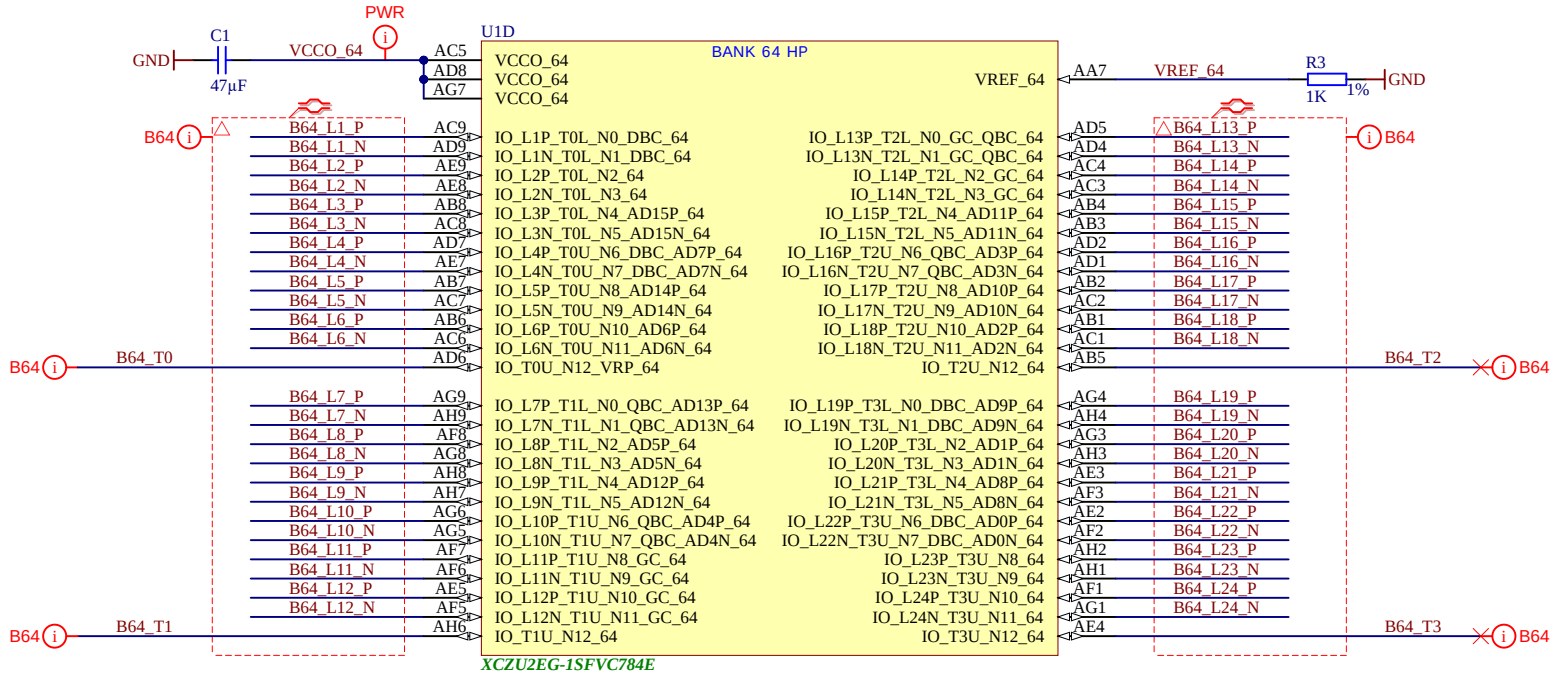

trenz electronic	Title: TE0820 - B64		
A4	Number: TE0820 2BE21MA		Rev. 04
Date: 2020-07-16	Copyright: Trenz Electronic GmbH / TT		Page7 of 23
Filename: B64.SchDoc			

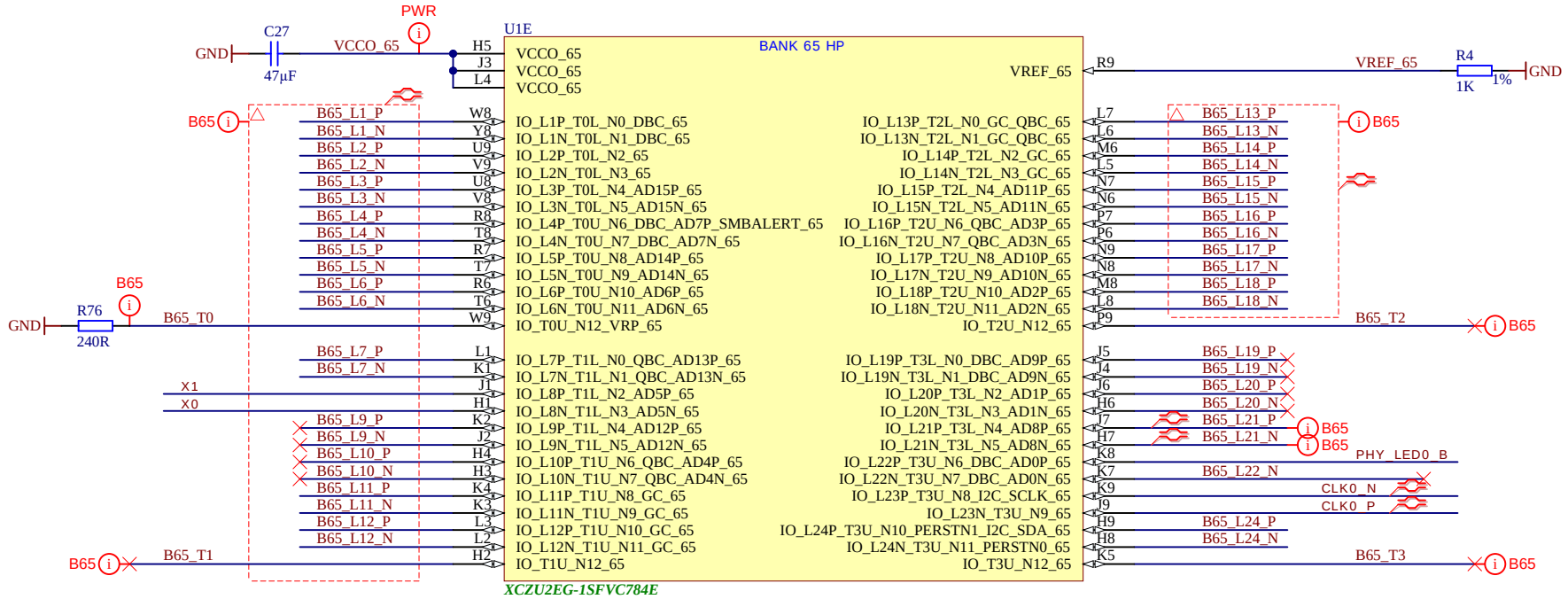

trenz electronic	Title: TE0820 - B65		
A4	Number: TE0820 2BE21MA		Rev. 04
Date: 2020-07-16	Copyright: Trenz Electronic GmbH / TT		Page8 of 23
	Filename: B65.SchDoc		

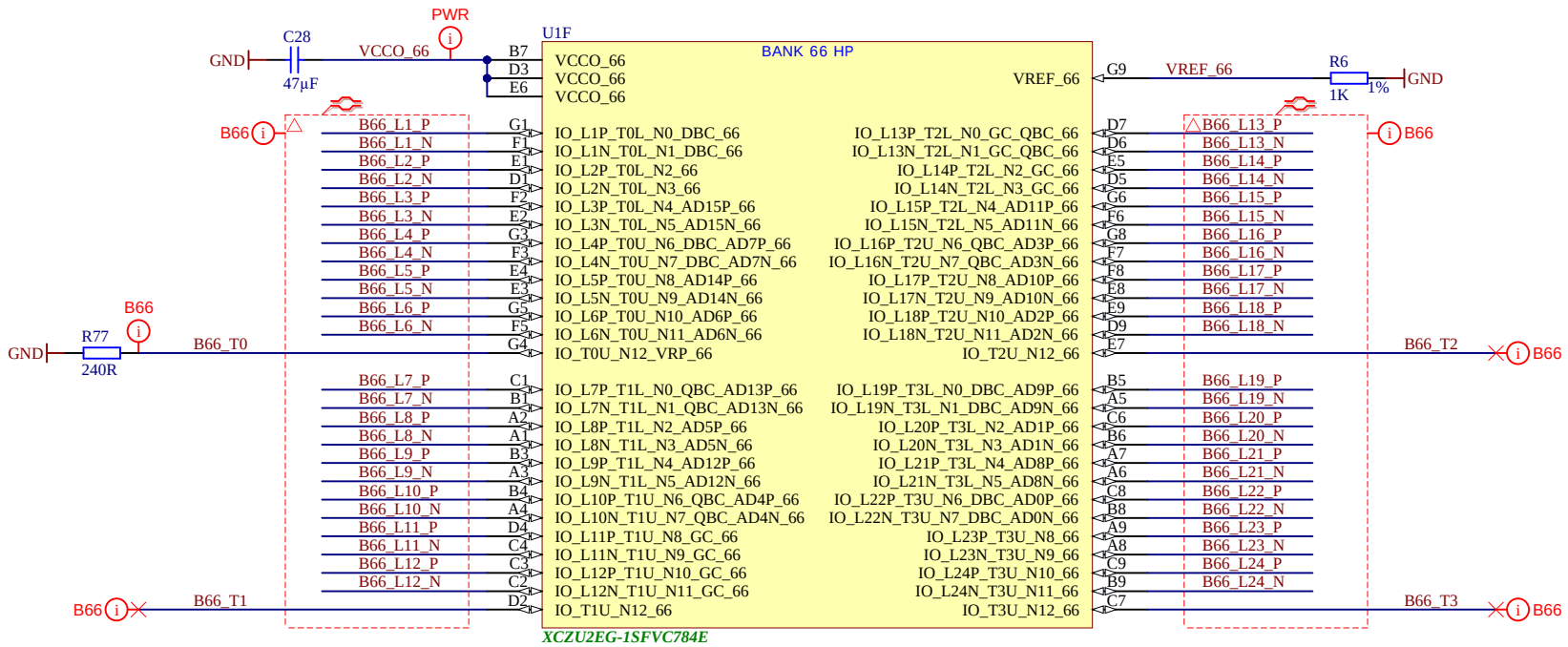

trenz electronic	Title: TE0820 - B66		
A4	Number: TE0820 2BE21MA		Rev. 04
Date: 2020-07-16	Copyright: Trenz Electronic GmbH / TT		Page9 of 23
Filename: B66.SchDoc			

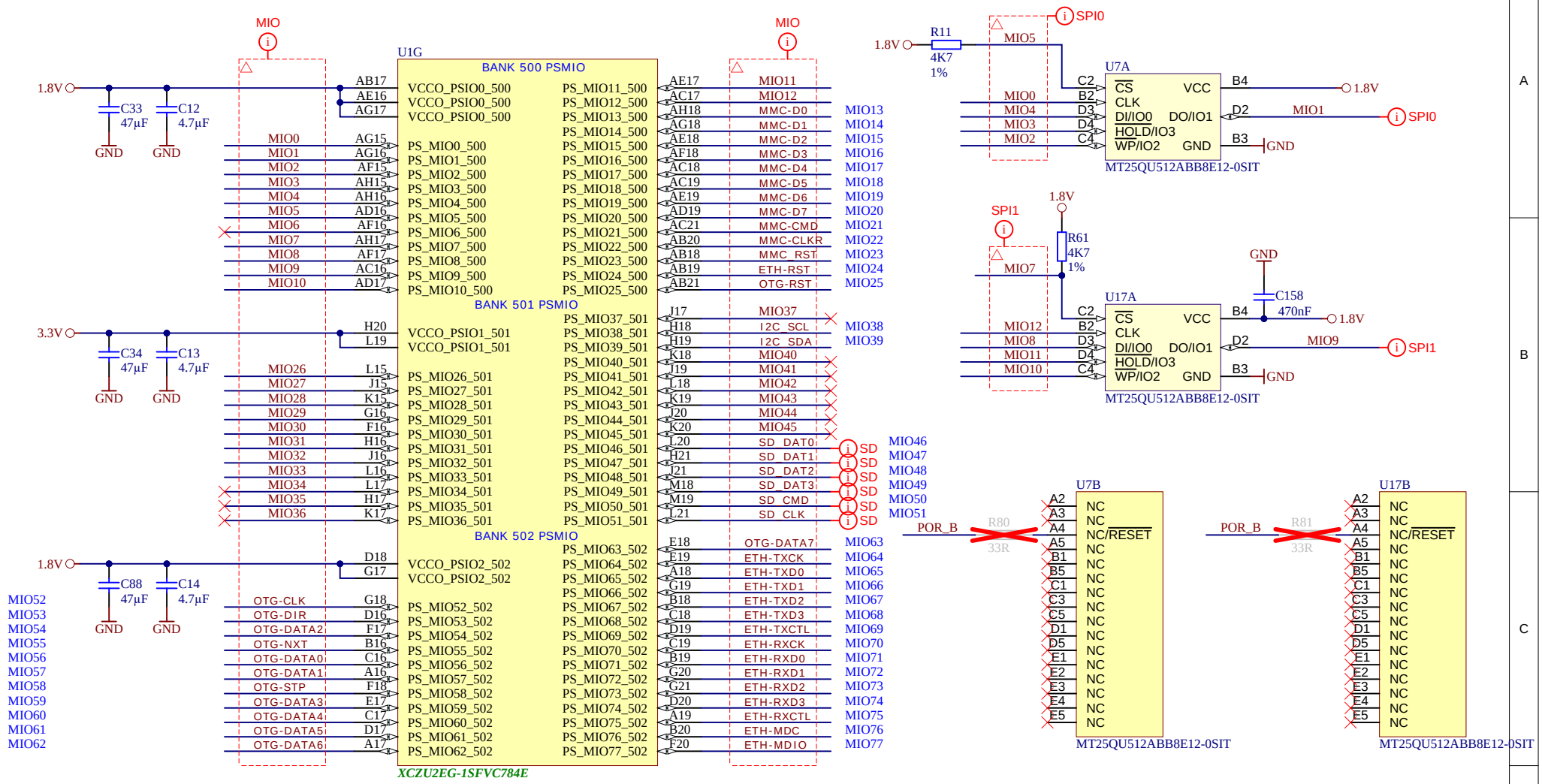

Title: TE0820 - MIO Banks			
A4	Number: TE0820 2BE21MA		Rev. 04
Date: 2020-07-16	Copyright: Trenz Electronic GmbH / TT		Page10 of 23
Filename: B_MIO.SchDoc			

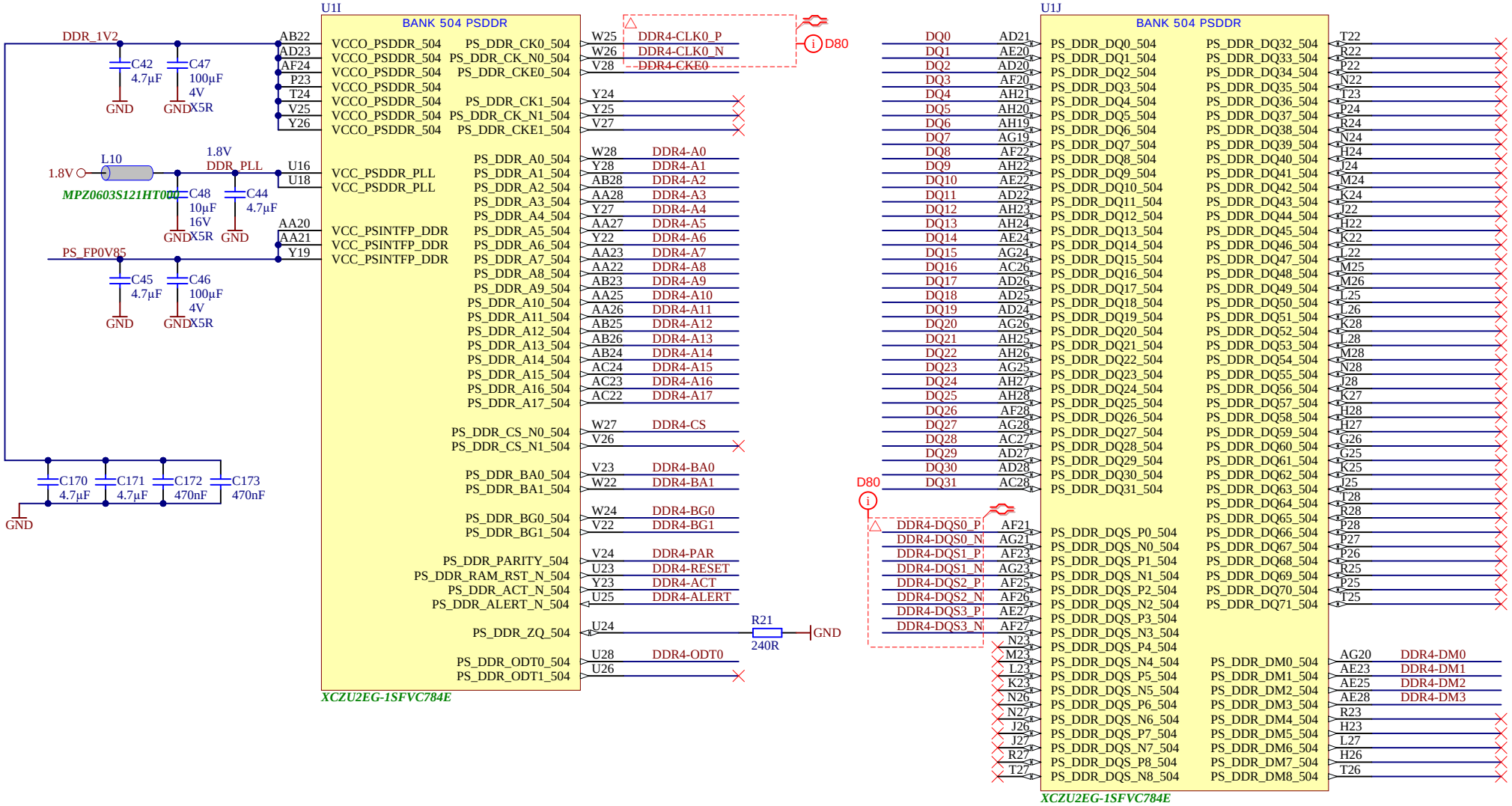

trenz electronic	Title: TE0820 - PS_DDR		
A4	Number: TE0820 2BE21MA		Rev. 04
Date: 2020-07-16	Copyright: Trenz Electronic GmbH / TT		Page11 of 23
Filename: PS_DDR.SchDoc			

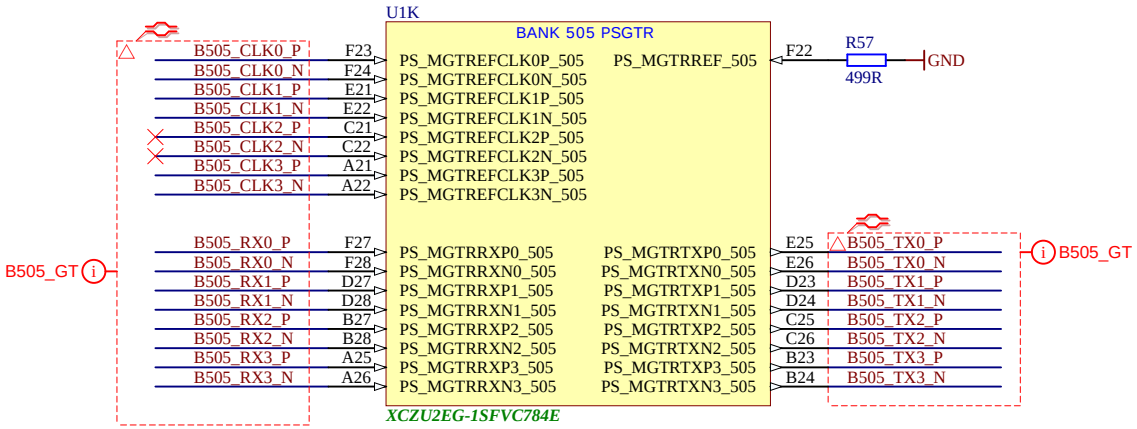

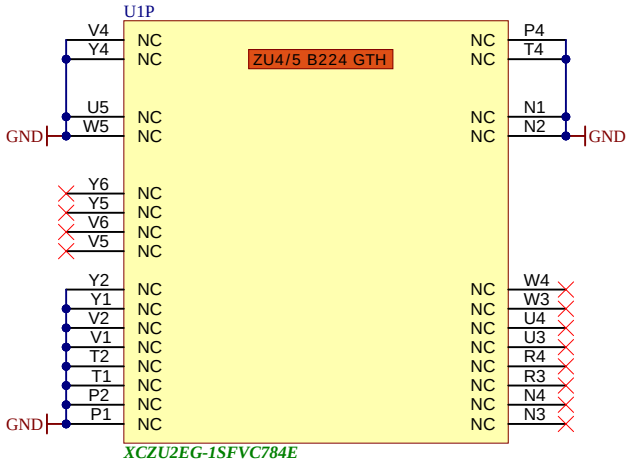

trenz electronic	Title: TE0820 - PS_GT		
A4	Number: TE0820 2BE21MA		Rev. 04
Date: 2020-07-16	Copyright: Trenz Electronic GmbH / TT		Page12 of 23
Filename: B_PS_GT.SchDoc			

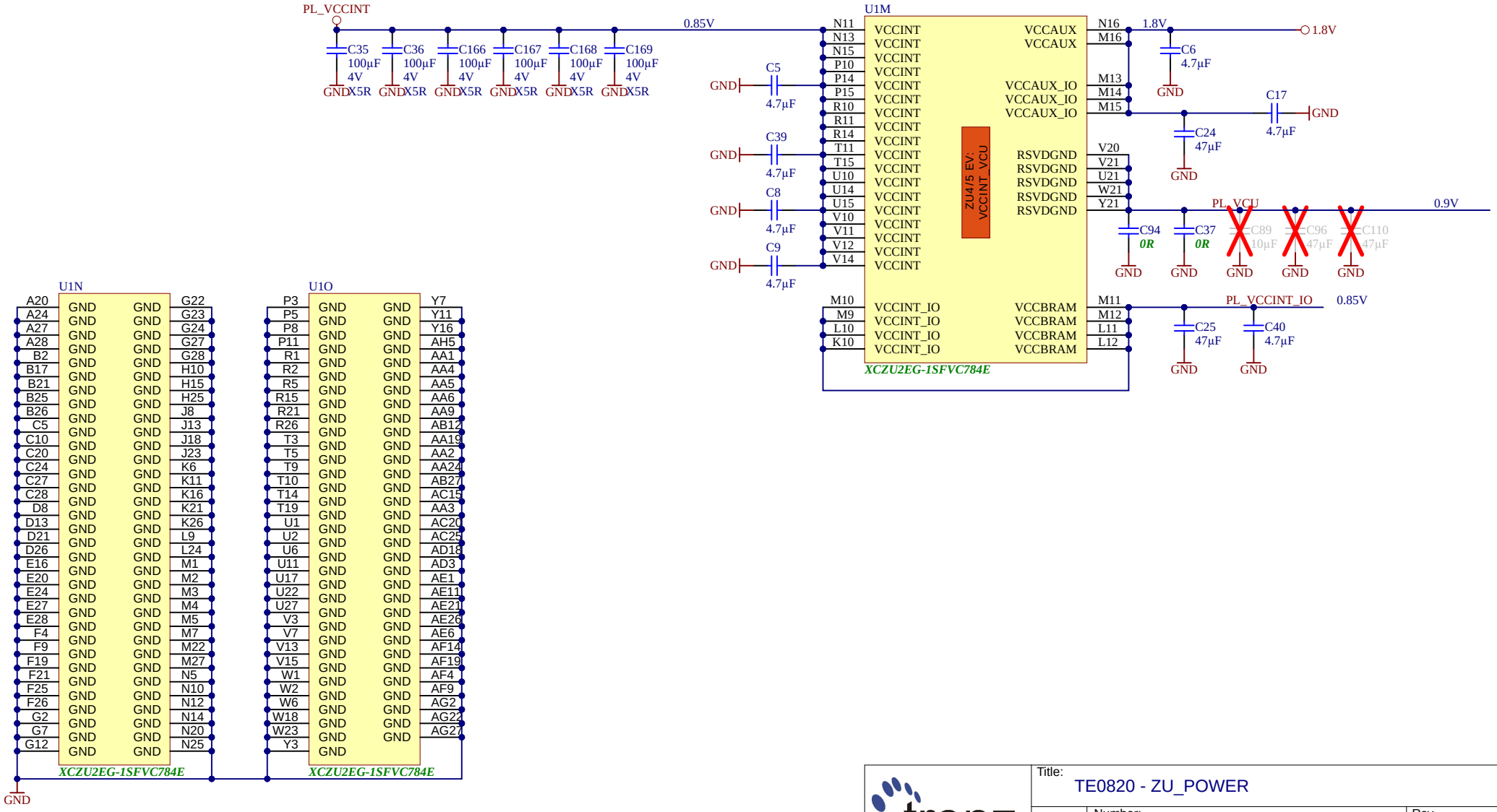

trenz electronic	Title: TE0820 - ZU_POWER		
A4	Number: TE0820 2BE21MA		Rev. 04
Date: 2020-07-16	Copyright: Trenz Electronic GmbH / TT		Page13 of 23
Filename: ZU_POWER.SchDoc			

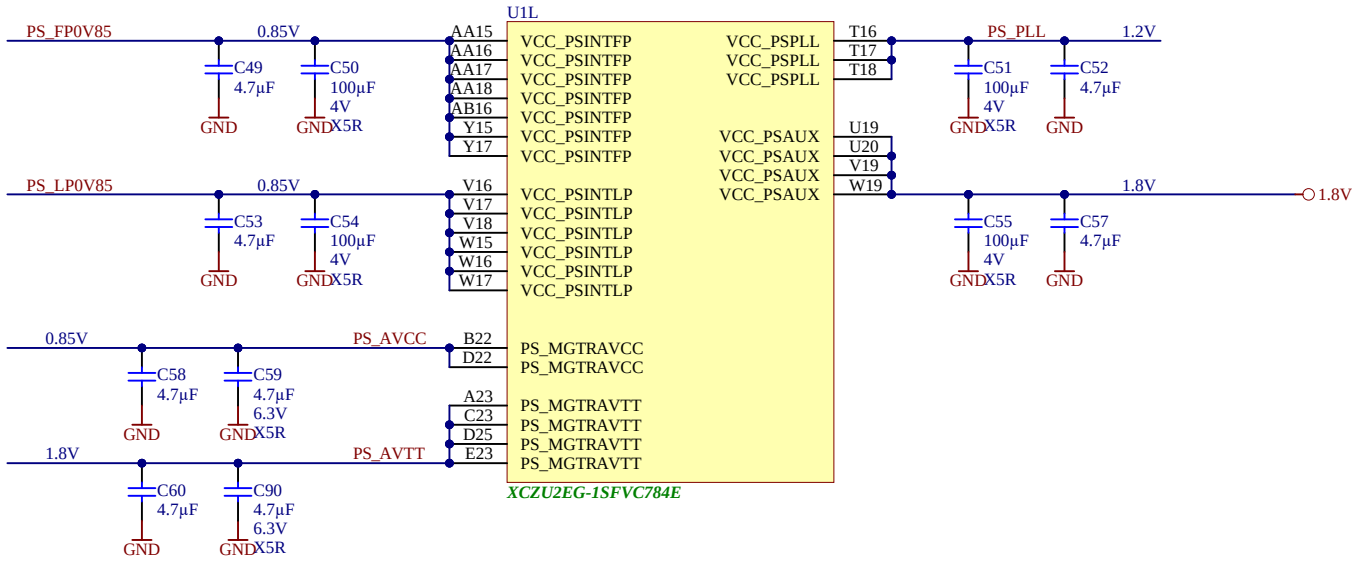

trenz electronic	Title: TE0820 - ZU_PS_POWER		
A4	Number: TE0820 2BE21MA		Rev. 04
Date: 2020-07-16	Copyright: Trenz Electronic GmbH / TT		Page14 of 23
Filename: ZU_PS_POWER.SchDoc			

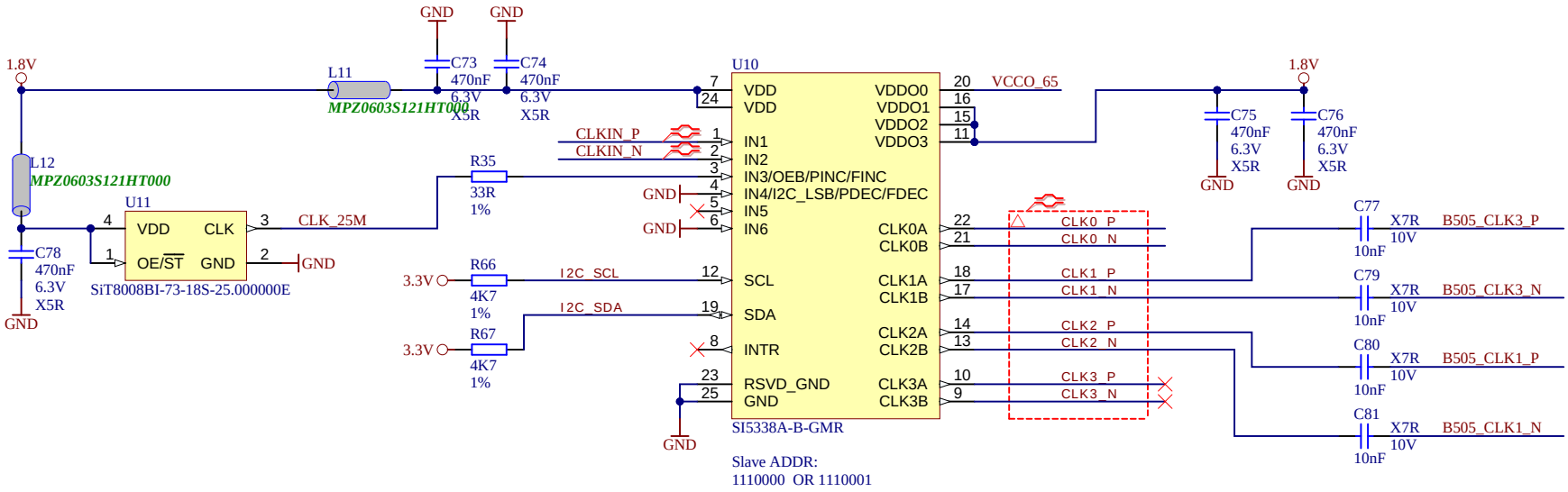

trenz electronic	Title: TE0820 - CLK		
A4	Number: TE0820 2BE21MA		Rev. 04
Date: 2020-07-16	Copyright: 2015 Trenz Electronic GmbH		Page15 of 23
Filename: CLK.SchDoc			

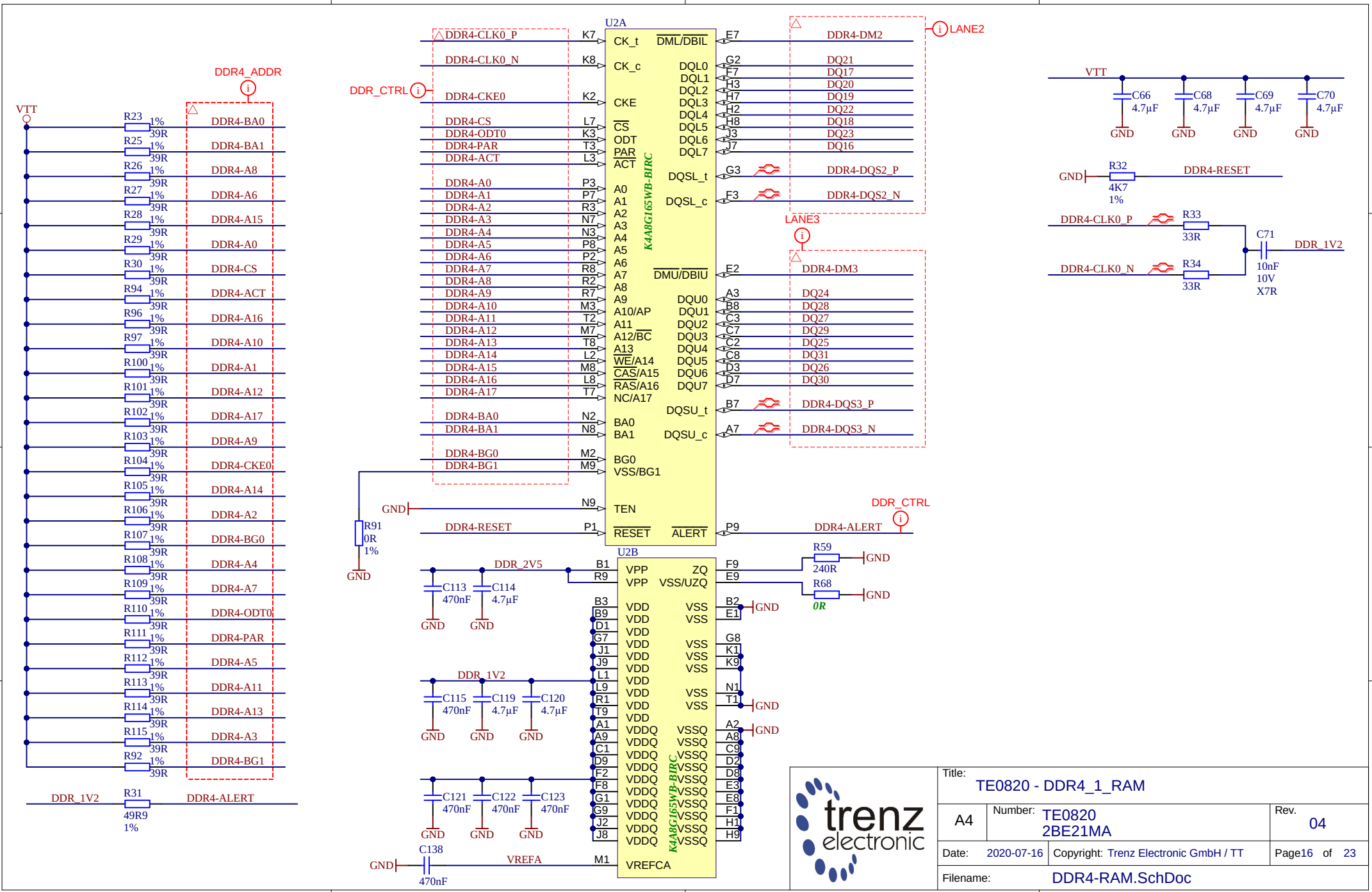
U2A
K4A8G165WB-BIRC
U2B
K4A8G165WB-BIRC
DDR4_ADDR
DDR_CTRL
LANE2
LANE3
VTT
DDR_1V2
DDR_2V5
GND
DDR4-CLK0_P
DDR4-CLK0_N
DDR4-CKE0
DDR4-CS
DDR4-ODT0
DDR4-PAR
DDR4-ACT
DDR4-A0
DDR4-A1
DDR4-A2
DDR4-A3
DDR4-A4
DDR4-A5
DDR4-A6
DDR4-A7
DDR4-A8
DDR4-A9
DDR4-A10
DDR4-A11
DDR4-A12
DDR4-A13
DDR4-A14
DDR4-A15
DDR4-A16
DDR4-A17
DDR4-BA0
DDR4-BA1
DDR4-BG0
DDR4-BG1
DDR4-RESET
DDR4-ALERT
DDR4-DM2
DDR4-DM3
DDR4-DQS2_P
DDR4-DQS2_N
DDR4-DQS3_P
DDR4-DQS3_N
DDR4-CLK0_P
DDR4-CLK0_N
DDR4-RESET
DDR_1V2
VREFA
R91 0R 1%
R59 240R
R68 0R
R32 4K7 1%
R33 33R
R34 33R
C71 10nF 10V X7R
C66 4.7µF
C68 4.7µF
C69 4.7µF
C70 4.7µF
C113 470nF
C114 4.7µF
C115 470nF
C119 4.7µF
C120 4.7µF
C121 470nF
C122 470nF
C123 470nF
C138 470nF
R31 49R9 1%
R92 39R 1%
trenz electronic
Title: TE0820 - DDR4_1_RAM
A4
Number: TE0820 2BE21MA
Rev. 04
Date: 2020-07-16
Copyright: Trenz Electronic GmbH / TT
Page16 of 23
Filename: DDR4-RAM.SchDoc

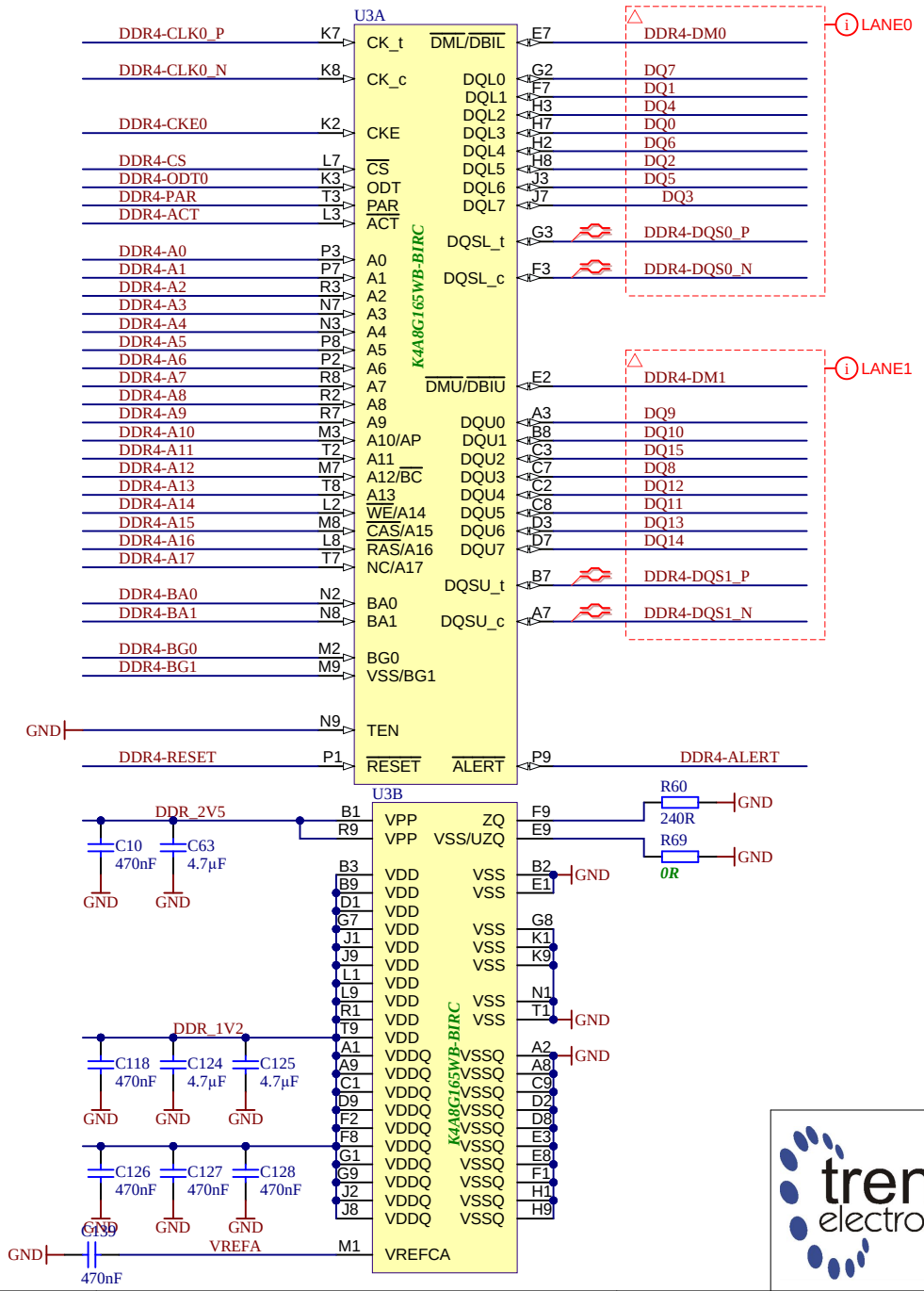

trenz electronic	Title: TE0820 - DDR4_2_RAM		
A4	Number: TE0820 2BE21MA		Rev. 04
Date: 2020-07-16	Copyright: Trenz Electronic GmbH / TT		Page17 of 23
Filename: DDR4-RAM_2.SchDoc			

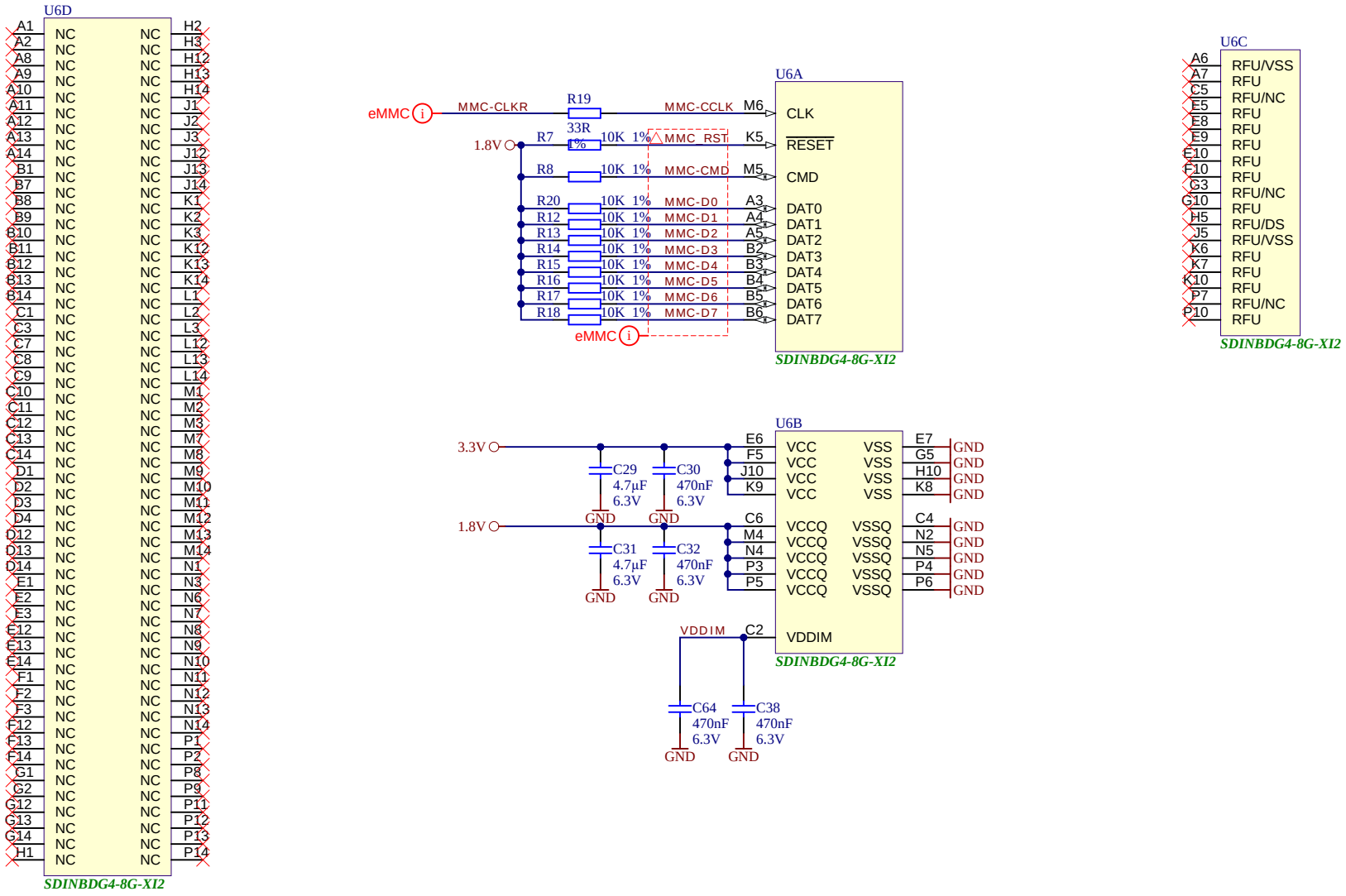

trenz electronic	Title: TE0820 - eMMC		
A4	Number: TE0820 2BE21MA		Rev. 04
Date: 2020-07-16	Copyright: Trenz Electronic GmbH / TT		Page18 of 23
Filename: eMMC.SchDoc			

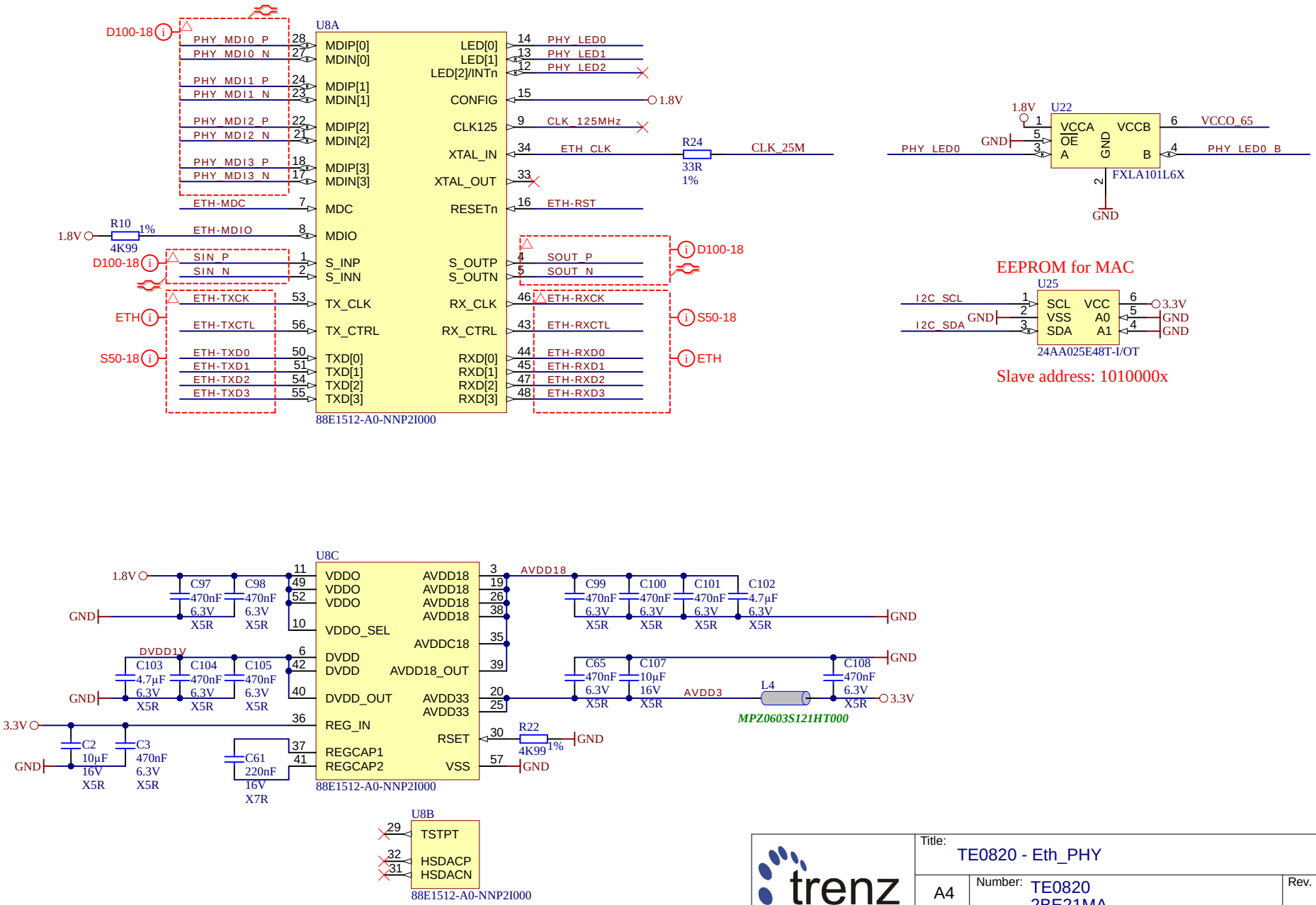

Title: TE0820 - Eth_PHY			
A4	Number: TE0820 2BE21MA		Rev. 04
Date: 2020-07-16	Copyright: 2015 Trenz Electronic GmbH		Page19 of 23
Filename: ETH-PHY.SchDoc			

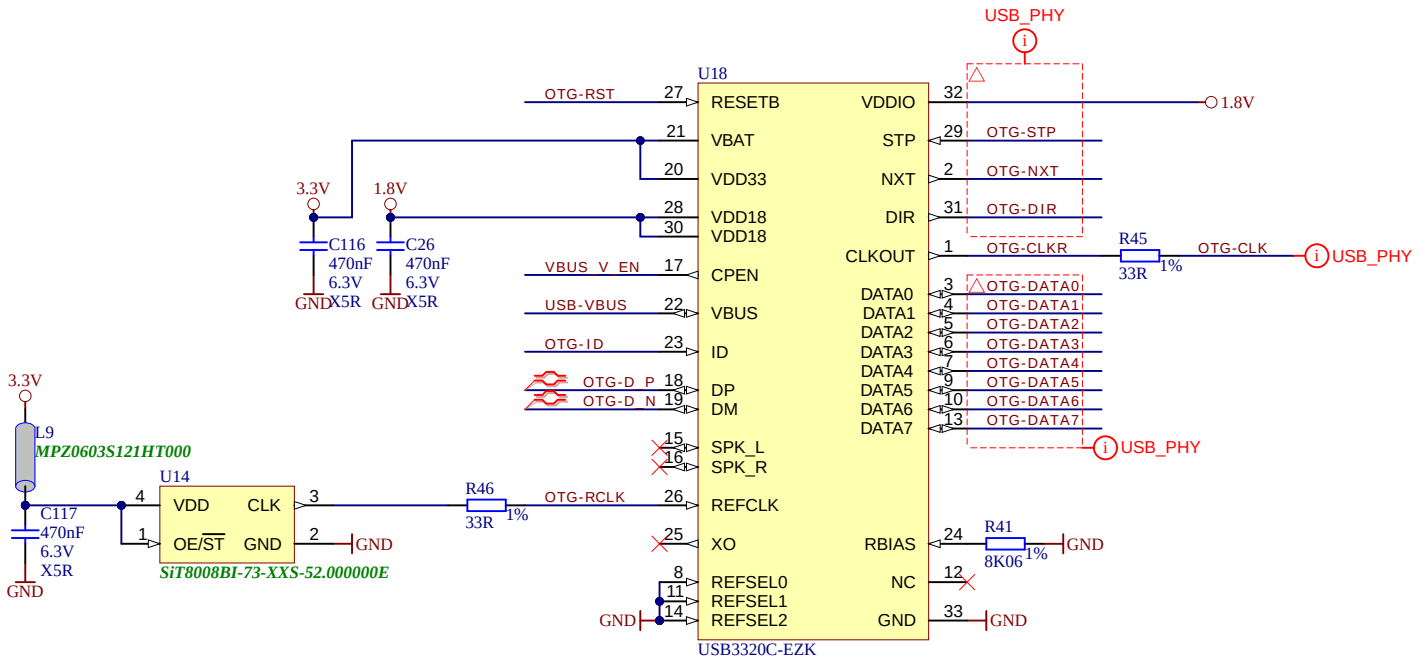

trenz electronic	Title: TE0820 - USB_PHY		
A4	Number: TE0820 2BE21MA		Rev. 04
Date: 2020-07-16	Copyright: 2015 Trenz Electronic GmbH		Page20 of 23
Filename: USB-PHY.SchDoc			

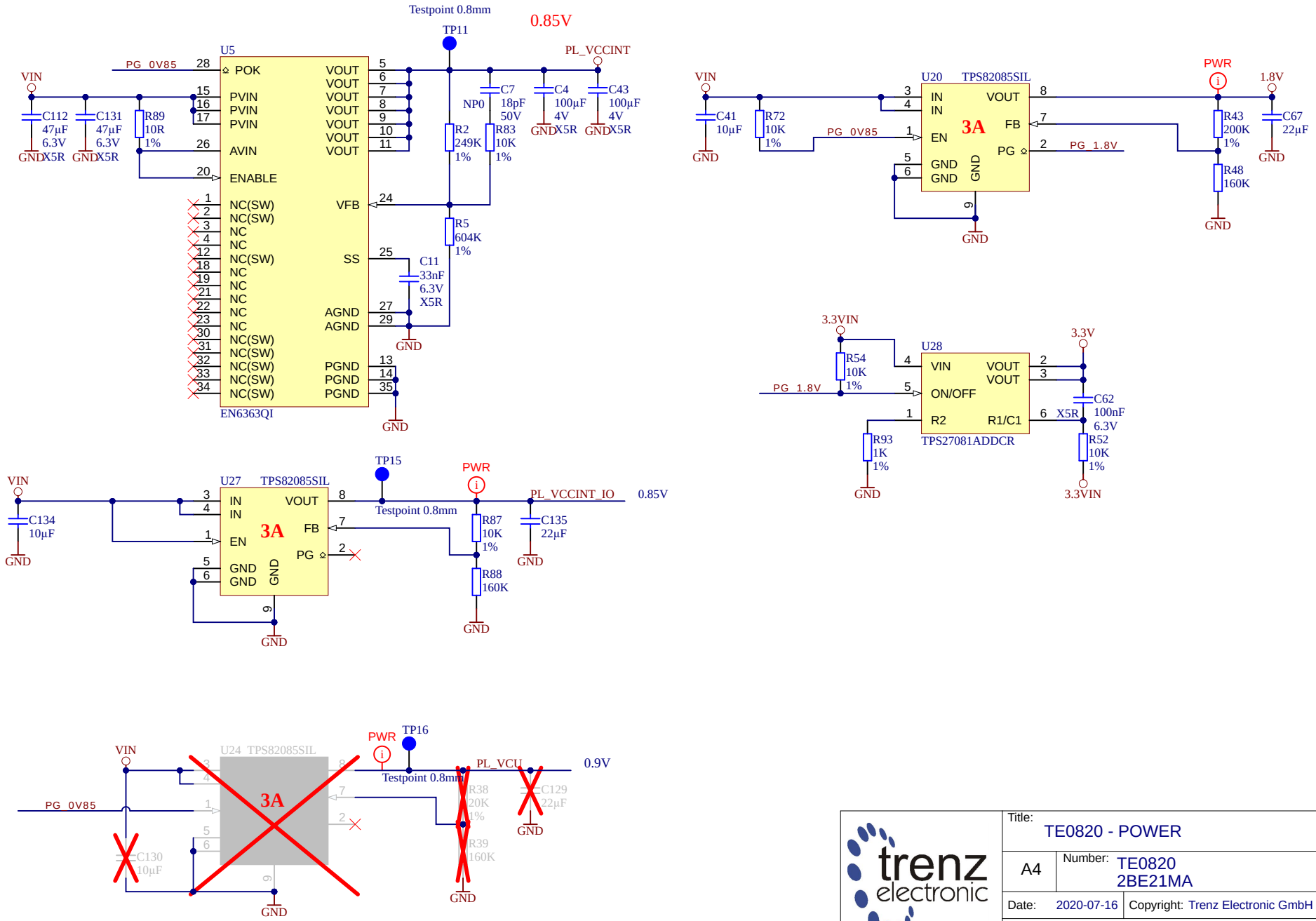

trenz electronic	Title: TE0820 - POWER		
A4	Number: TE0820 2BE21MA		Rev. 04
Date: 2020-07-16	Copyright: Trenz Electronic GmbH / TT		Page21 of 23
Filename: POWER.SchDoc			

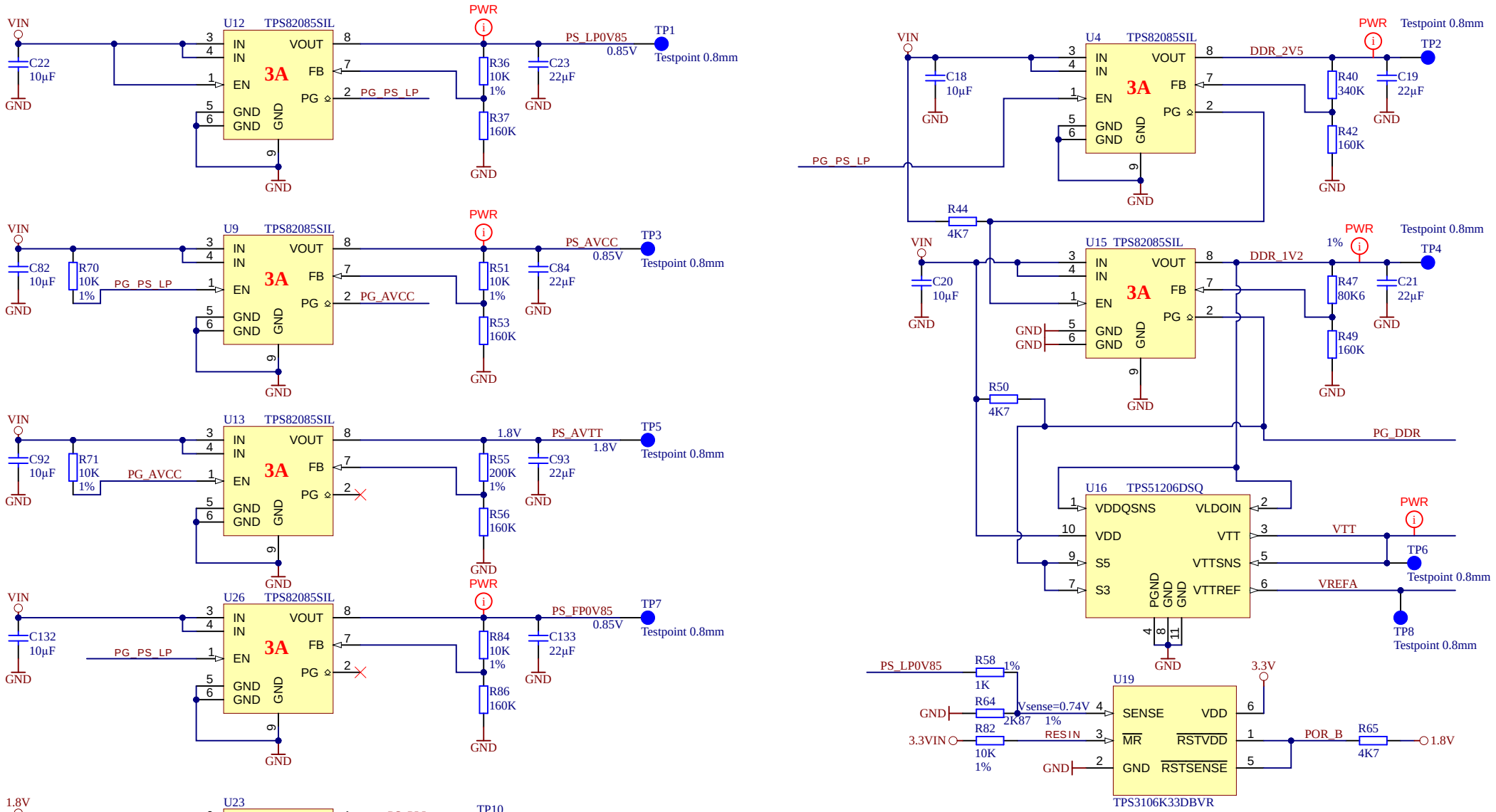

trenz electronic

Title: TE0820 - POWER_1		
A4	Number: TE0820 2BE21MA	Rev. 04
Date: 2020-07-16	Copyright: Trenz Electronic GmbH / TT	Page22 of 23
Filename: POWER_1.SchDoc		

CHANGES REV01 to REV02
---
1) Added MAC EEPROM (slave address:)
2) LIB components update
3) Fixed SD Card connection
4) Fixed sense connection from DCDC
5) Made correct power connection for VCU (removed DCDC, added resistors and caps like as Xilinx recommended)
6) Added resistors for variants (ZU+ with/without VCU)
7) Added termination resistors (240R) to VRP pins fro all HP-banks

CHANGES REV02 to REV03
---
1) Fixed VCU connection: add additional DCDC (0.9V)
2) LIB components update
3) Change package 1K resistors (0402 -> 0201)
4) Added LEDs (1x user LED, 1x LED for ERR_STATUS, 1xLED for ERR_OUT)
5) Change obsolete 2xSPI Flash (256MBit) -> 2xSPI Flash (512MBit)
6) Added additional DCDCs (PL_VCCINT_IO, PS_FP0V85)
7) Changed DCDC (U5) 6A (optional 4A)

CHANGES REV03 to REV04

VT: 1) Fixed DDR4 connection (BG1), support B-die DDR4 Industrial grade chips
VT: 2) Added R93, changed value C62, change obsolete U28
VT: 3) Added R89 (10R)
VT: 4) Added additional caps 4.7uF to PS_AVTT/PS_AVCC (Xilinx doc UG583)
VT: 5) Changed R51 20k ->10K (PS_AVCC = 0.85V, Xilinx doc DS925 v1.17)
VT: 6) Fixed DDR4 connection (Alert)
VT: 7) Added 3.3V signal to CPLD
VT: 8) Added testpoints
VT: 9) LIB components update

Revision 04a (29.10.2020):
---
1. VY: added block diagram, updated module pictures

trenz electronic	Title: TE0820 - Revision Changes		
A4	Number: TE0820 2BE21MA		Rev. 04
Date: 2020-07-16	Copyright: Trenz Electronic GmbH / TT		Page23 of 23
Filename: Revision Changes.SchDoc			