U_DDR-RAM
DDR-RAM.SchDoc

U_B13
B13.SchDoc

U_B34
B34.SchDoc

U_B35
B35.SchDoc

U_MIO_B500
MIO_B500.SchDoc

U_MIO_B501
MIO_B501.SchDoc

U_Interface
Interface.SchDoc

U_Power
Power.SchDoc

U_PS-DRR
PS-DDR.SchDoc

U_PowerOverview
PowerOverview.SchDoc

U_ETH-PHY
ETH-PHY.SchDoc

U_ZYNC_POWER
ZYNC_POWER.SchDoc

U_ZYNQ_MISC
ZYNQ_MISC.SchDoc

U_B33
B33.SchDoc

U_IND_ETH-PHY
IND_ETH-PHY.SchDoc

U_USB-PHY
USB-PHY.SchDoc

U_eMMC
eMMC.SchDoc

U_SENSOR-RTC
SENSOR-RTC.SchDoc

U_CPLD
CPLD.SchDoc

FIDU-DOT - small PM1
FIDU-DOT - small PM2
FIDU-DOT - small PM3
FIDU-DOT - small PM4
FIDU-DOT - small PM5
FIDU-DOT - small PM6

S/N
1 0R 2
Serialnumber

GND
Mount.Hole 3.2mm für Unterlegscheibe

trenz electronic	Title: TE0729		
A4	Number: TE0729 2IFC1		Rev. 02
Date: 2016-05-02	Copyright: Trenz Electronic GmbH / TT		Page1 of 20
	Filename: TE0729.SchDoc		

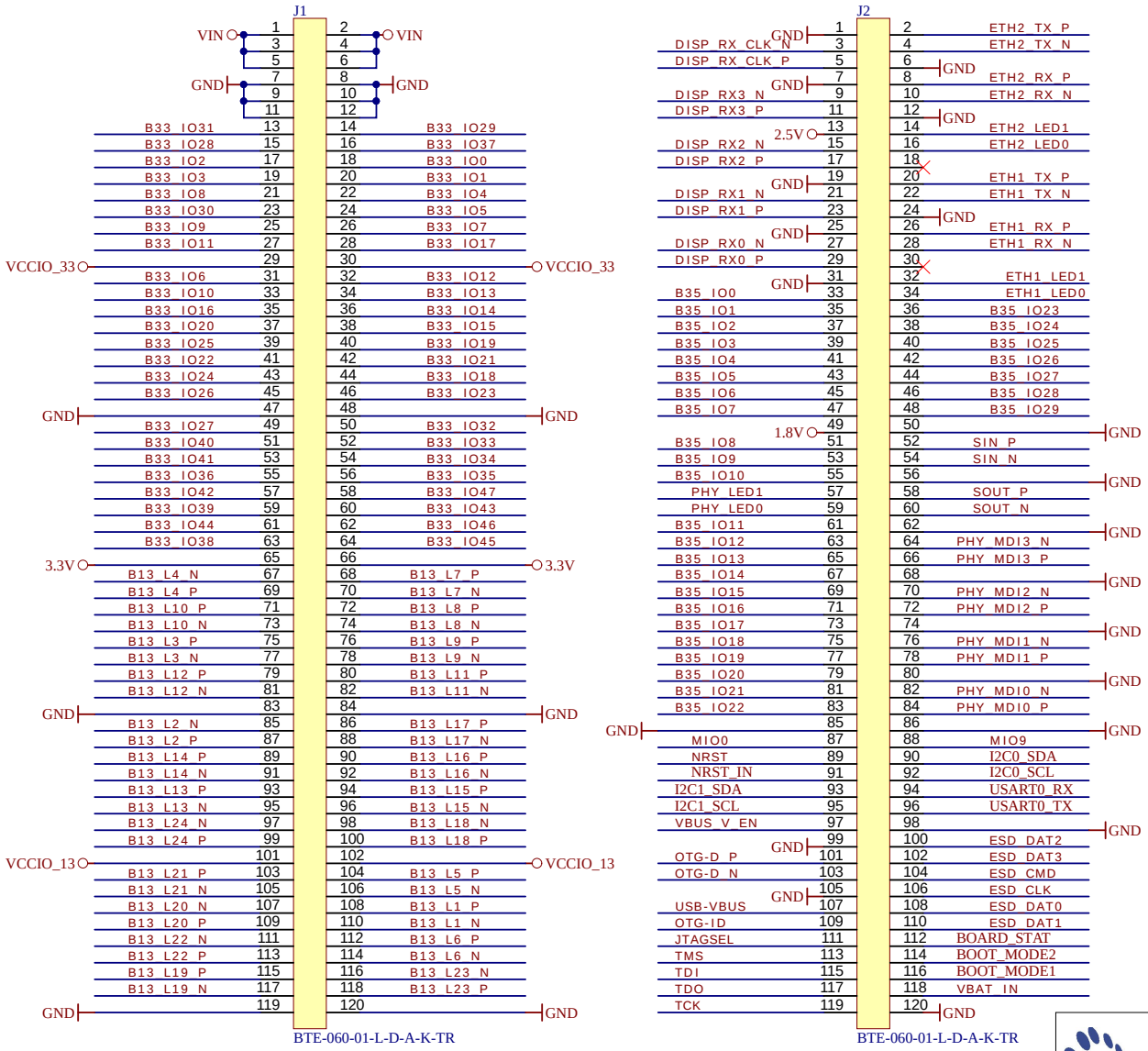

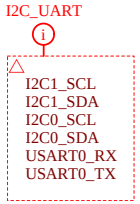

trenz electronic	Title: TE0729 - Interface		
A4	Number: TE0729 2IFC1		Rev. 02
Date: 2016-05-02	Copyright: Trenz Electronic GmbH / TT		Page2 of 20
Filename: Interface.SchDoc			

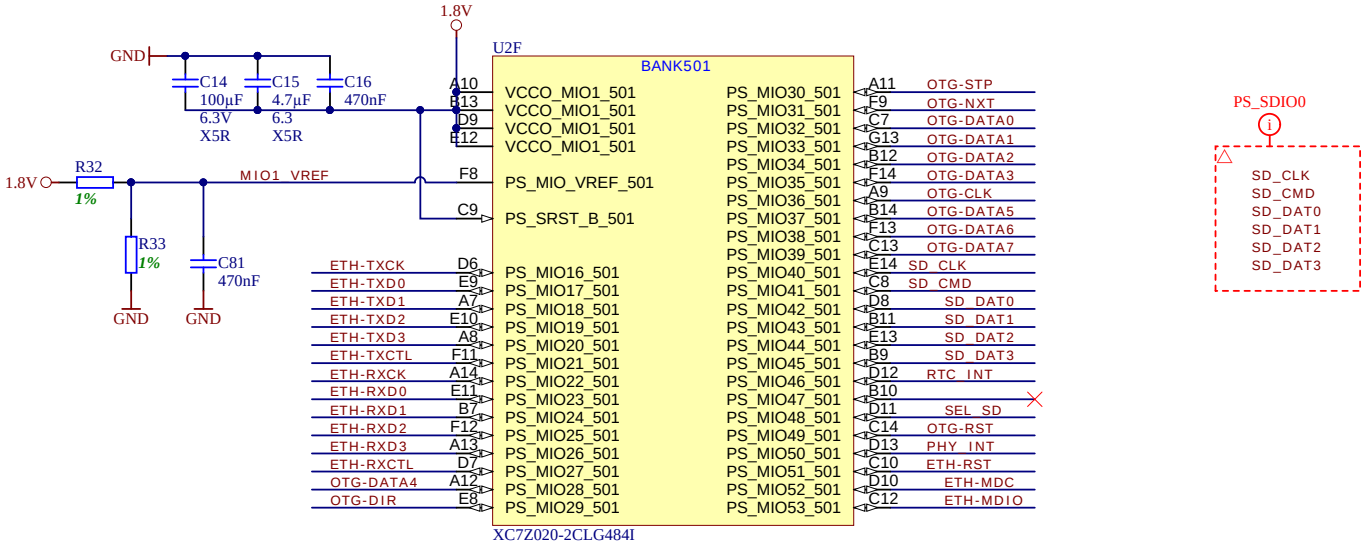

trenz electronic	Title: TE0729 - ZYNQ_MIO_B501		
A4	Number: TE0729 2IFC1		Rev. 02
Date: 2016-05-02	Copyright: Trenz Electronic GmbH / TT		Page3 of 20
Filename: MIO_B501.SchDoc			

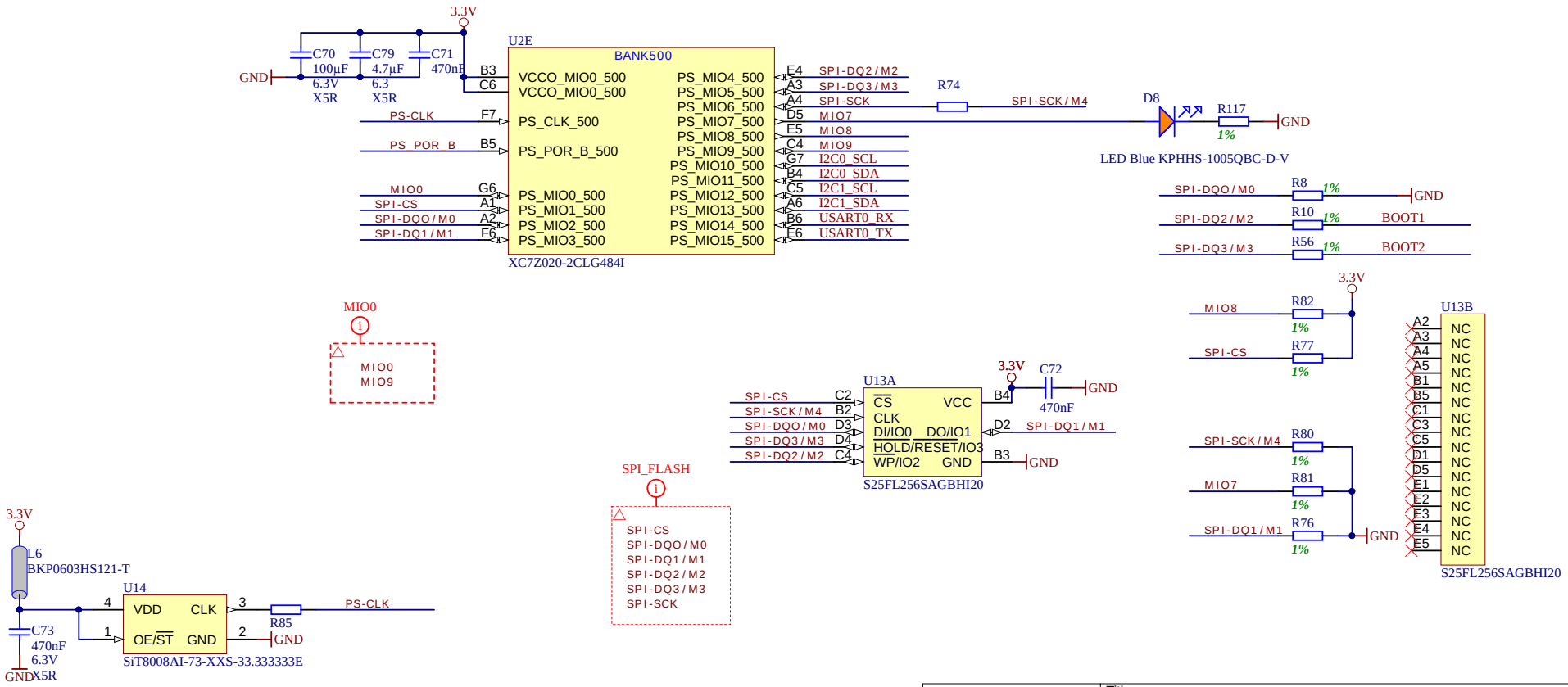

trenz electronic	Title: TE0729 - ZYNQ_MIO_B500		
A4	Number: TE0729 2IFC1		Rev. 02
Date: 2016-05-02	Copyright: Trenz Electronic GmbH / TT		Page4 of 20
Filename: MIO_B500.SchDoc			

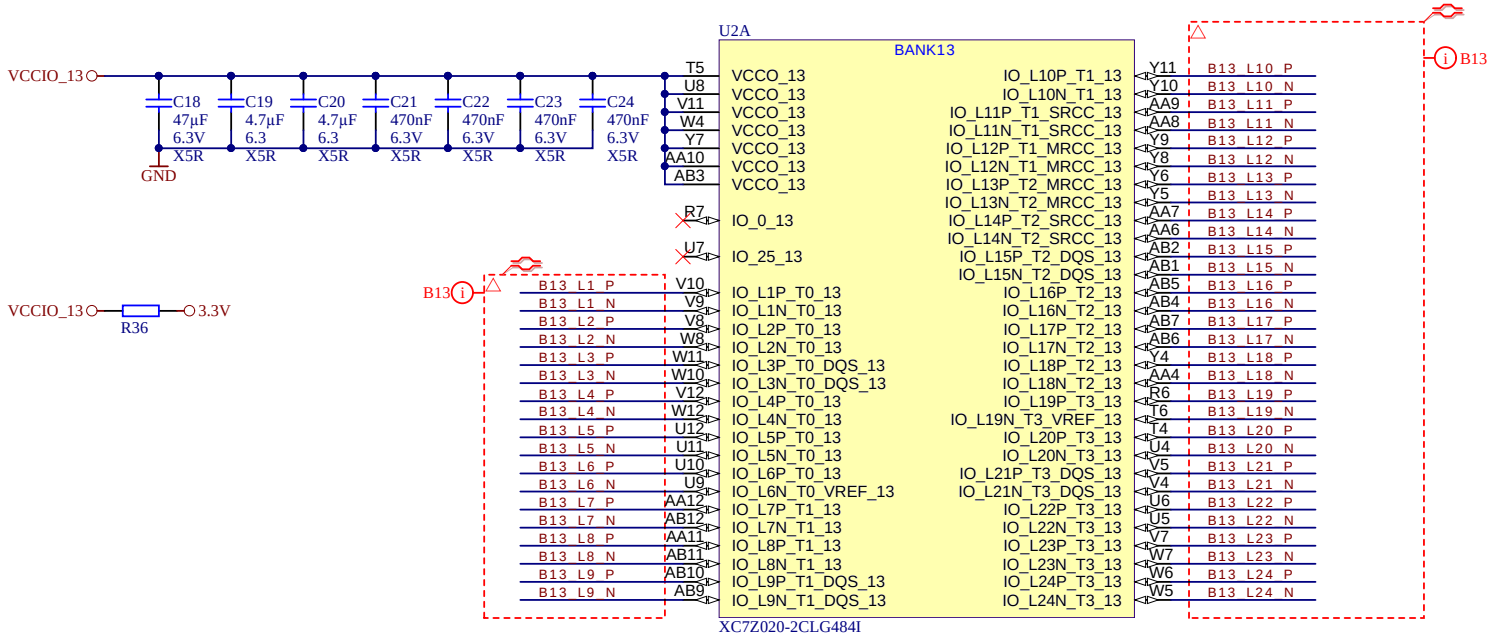

trenz electronic	Title: TE0729 - ZYNQ_B13		
A4	Number: TE0729 2IFC1		Rev. 02
Date: 2016-05-02	Copyright: Trenz Electronic GmbH / TT		Page5 of 20
Filename: B13.SchDoc			

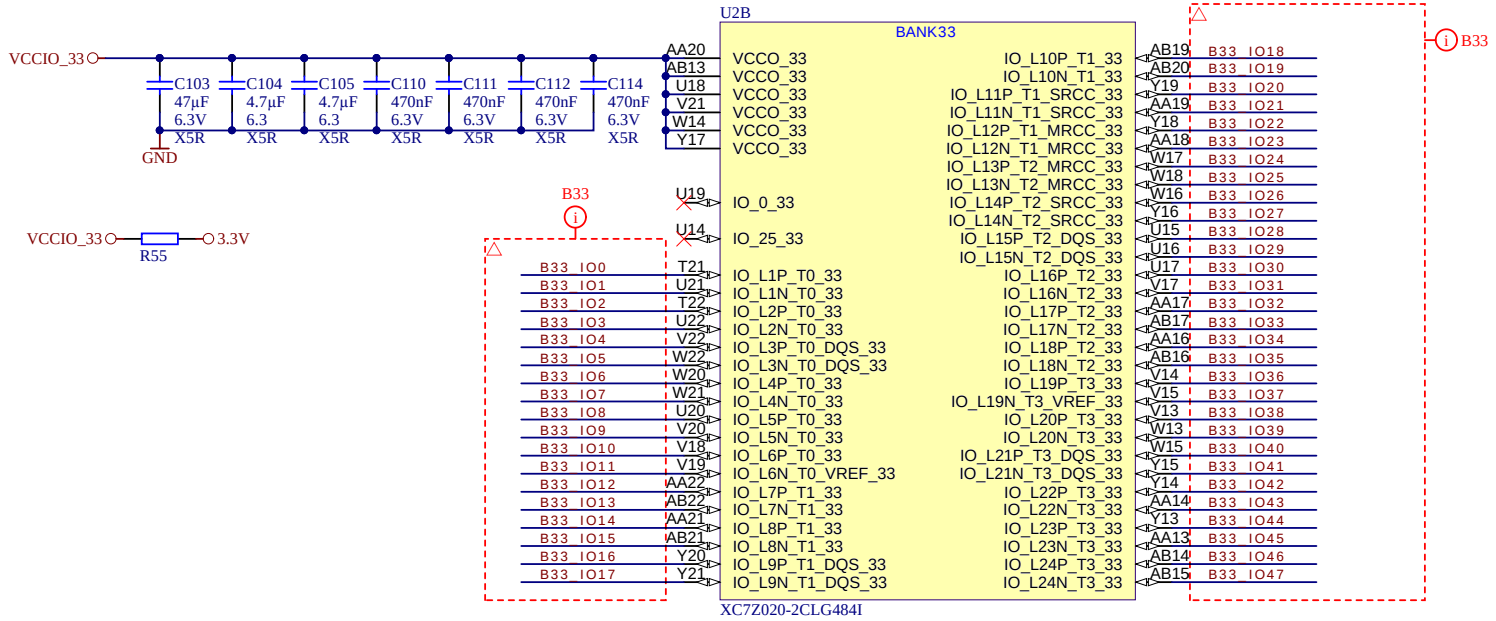

trenz electronic	Title: TE0729 - ZYNQ_B33		
A4	Number: TE0729 2IFC1		Rev. 02
Date: 2016-05-02	Copyright: Trenz Electronic GmbH / TT		Page6 of 20
Filename: B33.SchDoc			

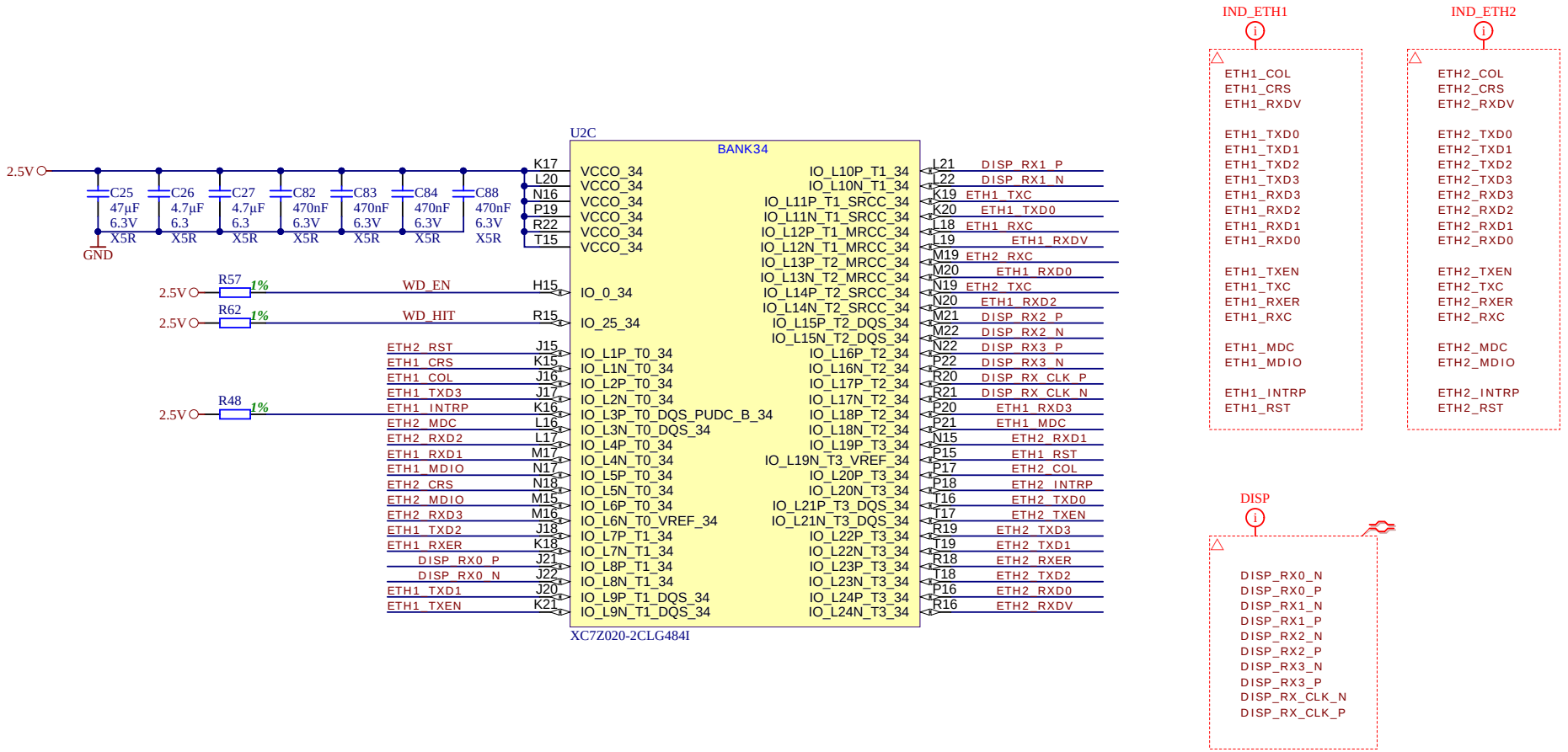

trenz electronic	Title: TE0729 - ZYNQ_B34		
A4	Number: TE0729 2IFC1		Rev. 02
Date: 2016-05-02	Copyright: Trenz Electronic GmbH / TT		Page7 of 20
Filename: B34.SchDoc			

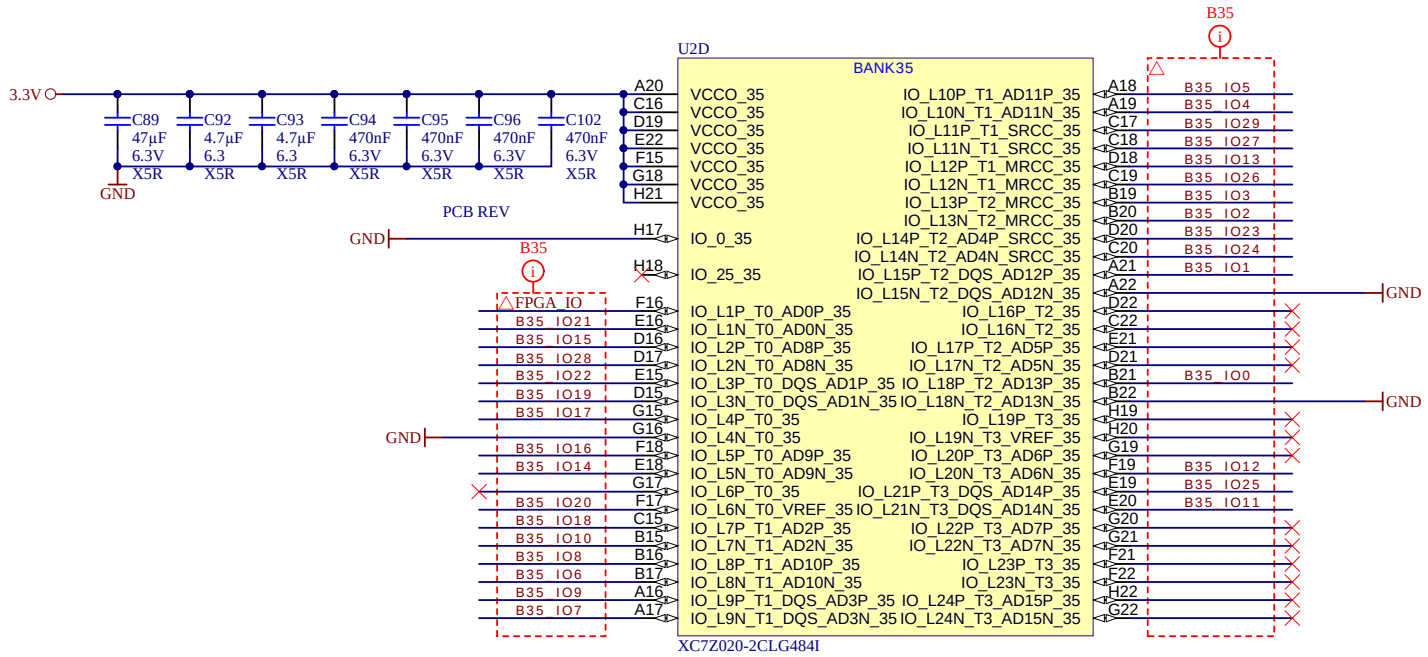

trenz electronic	Title: TE0729 - ZYNQ_B35		
A4	Number: TE0729 2IFC1		Rev. 02
Date: 2016-05-02	Copyright: Trenz Electronic GmbH / TT		Page8 of 20
Filename: B35.SchDoc			

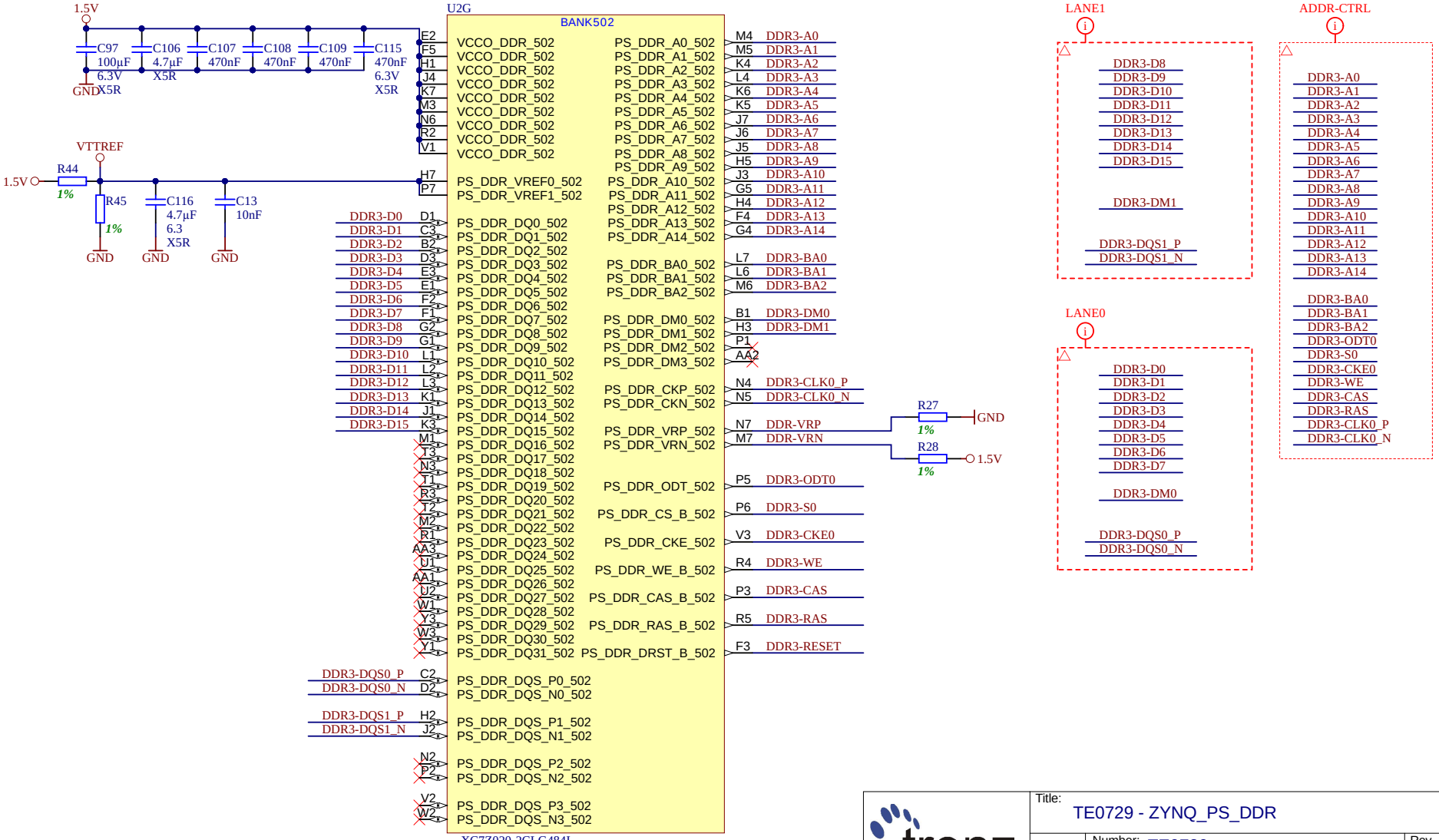

trenz electronic	Title: TE0729 - ZYNQ_PS_DDR		
A4	Number: TE0729 2IFC1		Rev. 02
Date: 2016-05-02	Copyright: Trenz Electronic GmbH / TT		Page9 of 20
Filename: PS-DDR.SchDoc			

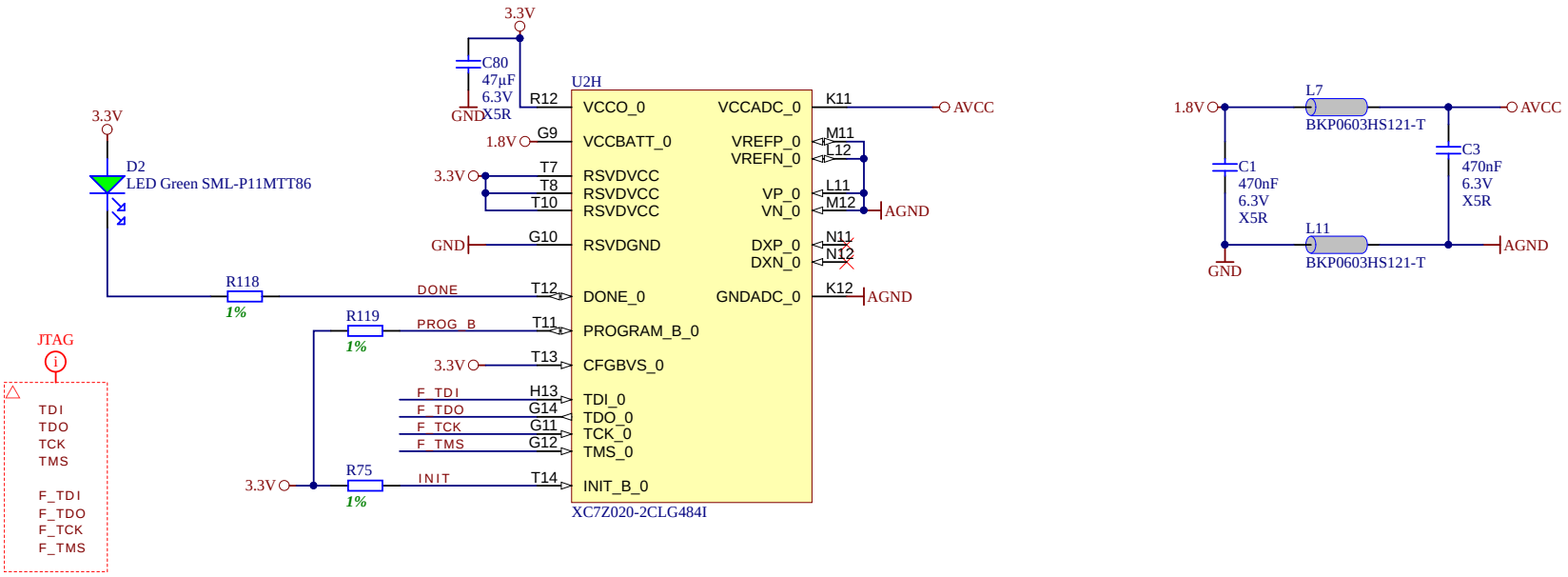

trenz electronic	Title: TE0729 - ZYNQ_MISC		
A4	Number: TE0729 2IFC1		Rev. 02
Date: 2016-05-02	Copyright: Trenz Electronic GmbH / TT		Page10 of 20
Filename: ZYNQ_MISC.SchDoc			

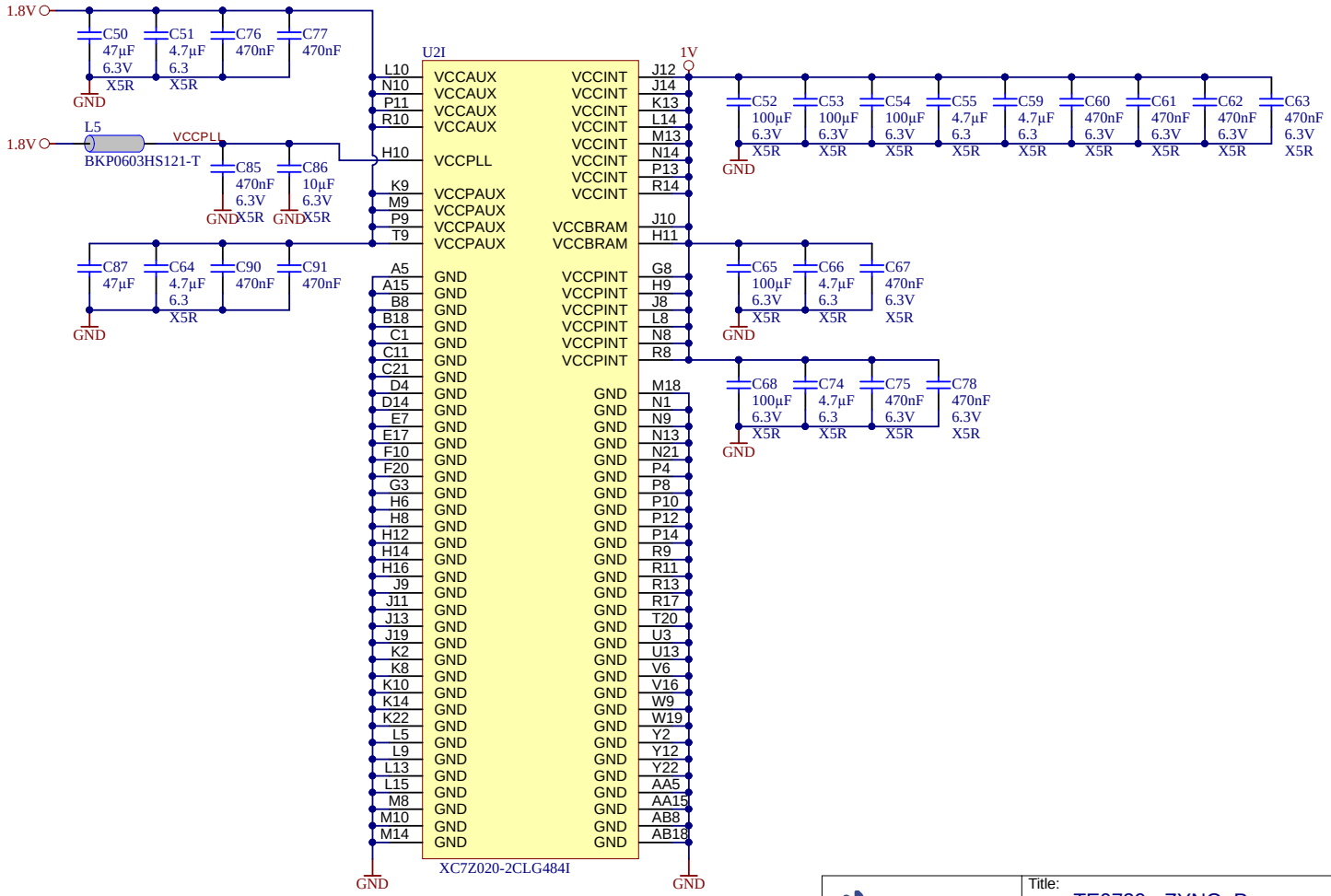

trenz electronic	Title: TE0729 - ZYNQ_Power		
A4	Number: TE0729 2IFC1		Rev. 02
Date: 2016-05-02	Copyright: Trenz Electronic GmbH / TT		Page11 of 20
Filename: ZYNC_POWER.SchDoc			

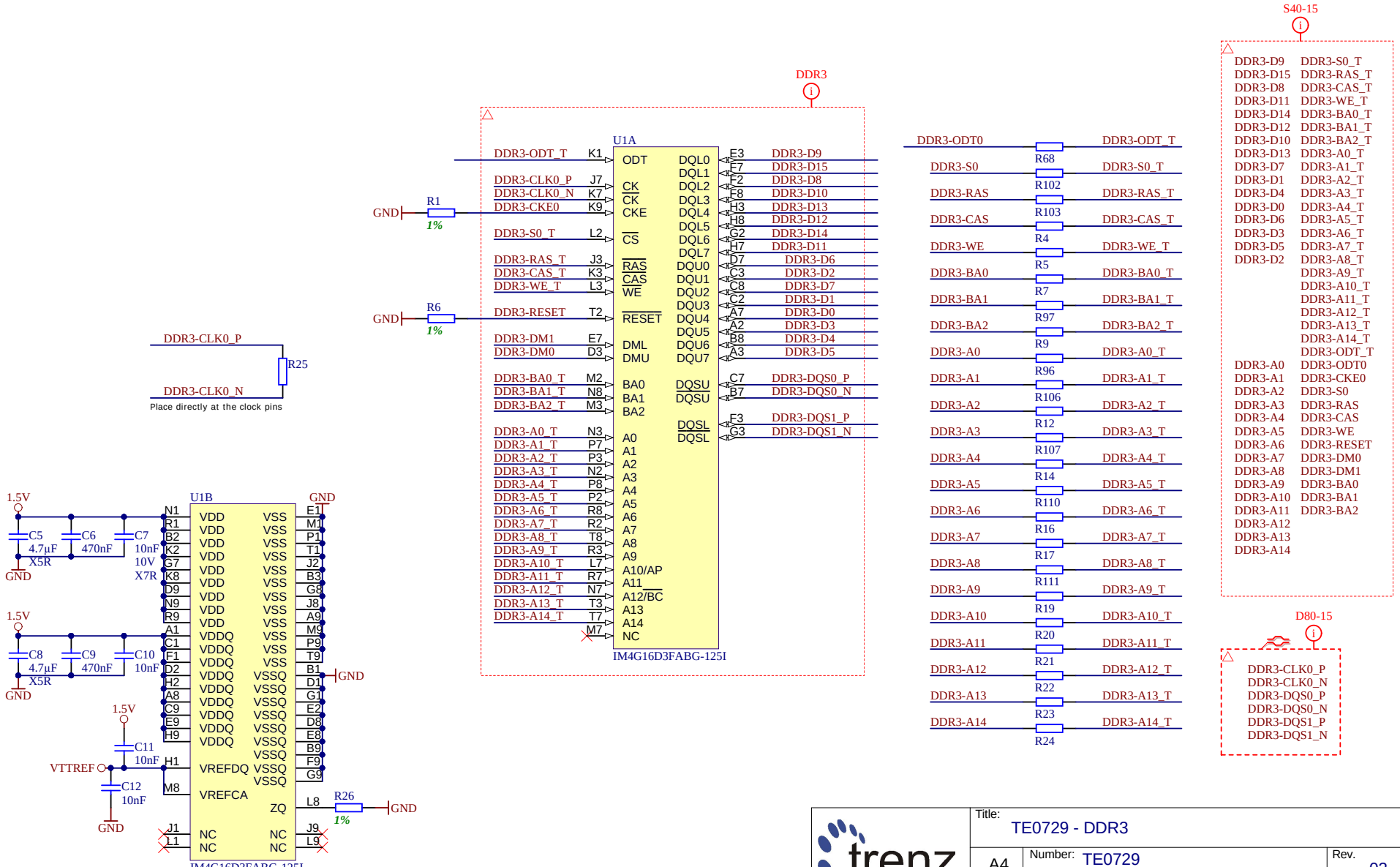

trenz electronic	Title: TE0729 - DDR3		
A4	Number: TE0729 2IFC1		Rev. 02
Date: 2016-05-02	Copyright: Trenz Electronic GmbH / TT		Page12 of 20
Filename: DDR-RAM.SchDoc			

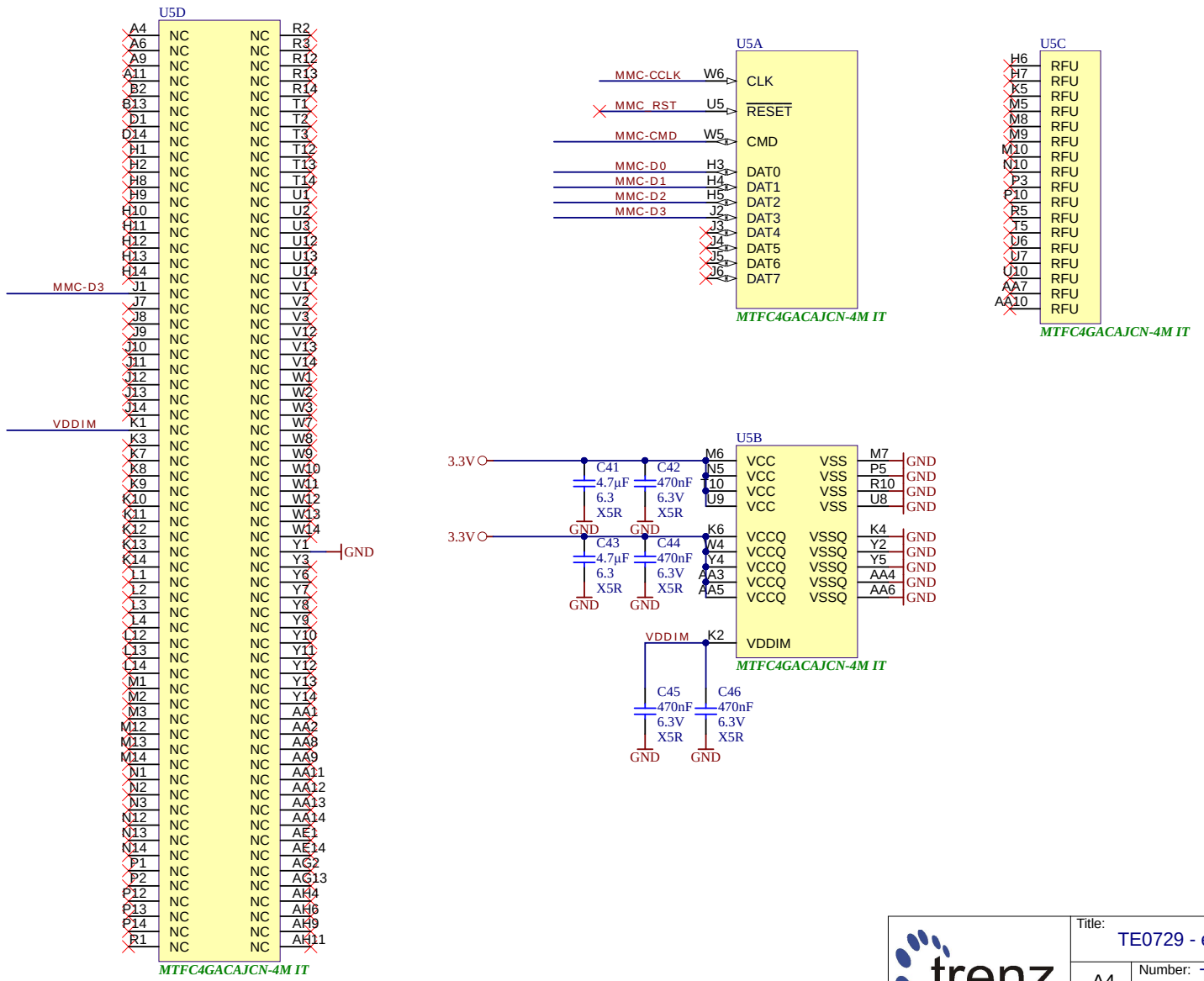

trenz electronic	Title: TE0729 - eMMC		
A4	Number: TE0729 2IFC1		Rev. 02
Date: 2016-05-02	Copyright: Trenz Electronic GmbH / TT		Page13 of 20
Filename: eMMC.SchDoc			

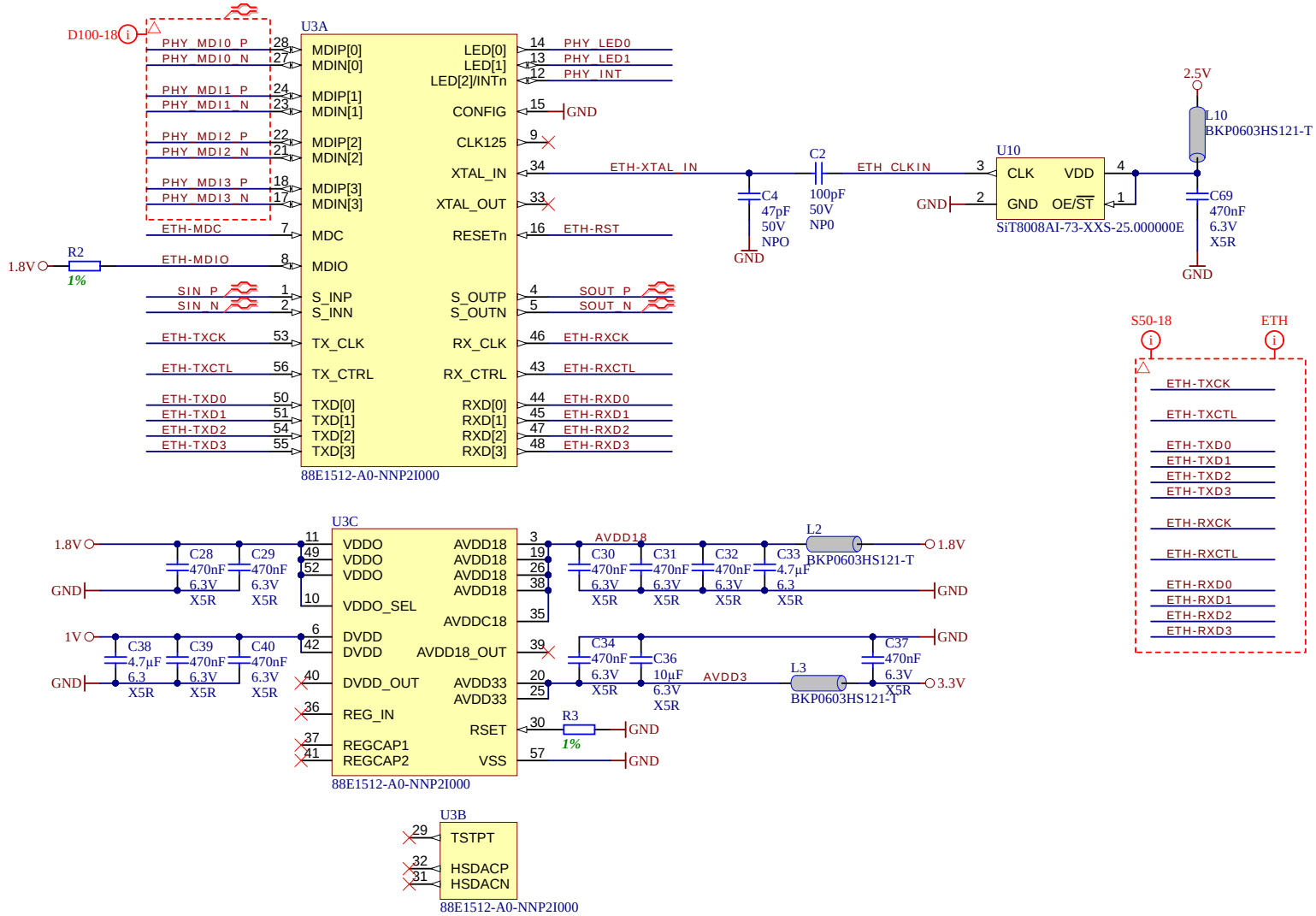

trenz electronic	Title: TE0729 - ETH_PHY		
A4	Number: TE0729 2IFC1		Rev. 02
Date: 2016-05-02	Copyright: Trenz Electronic GmbH / TT		Page14 of 20
Filename: ETH-PHY.SchDoc			

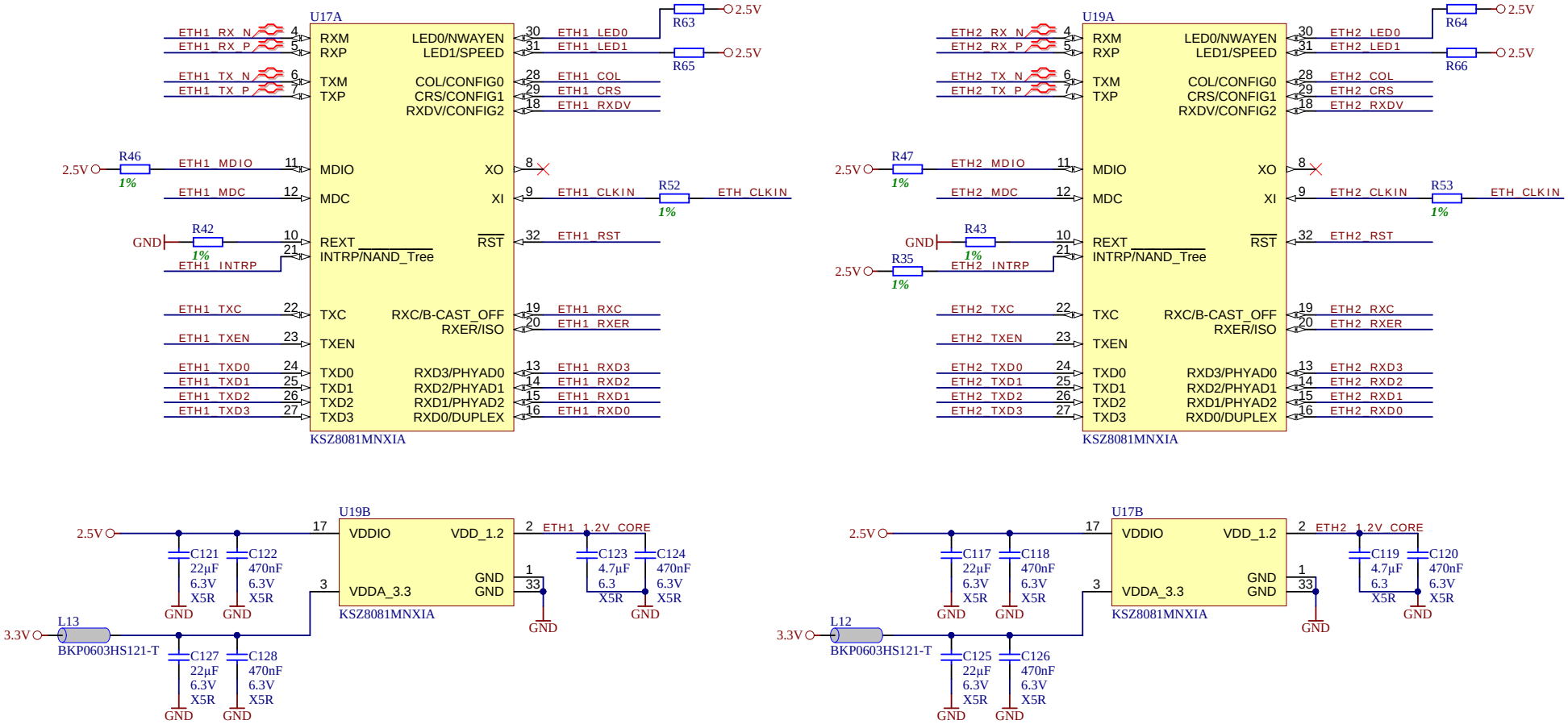

trenz electronic	Title: TE0729 - IND_ETH_PHY		
A4	Number: TE0729 2IFC1		Rev. 02
Date: 2016-05-02	Copyright: Trenz Electronic GmbH / TT		Page15 of 20
Filename: IND_ETH-PHY.SchDoc			

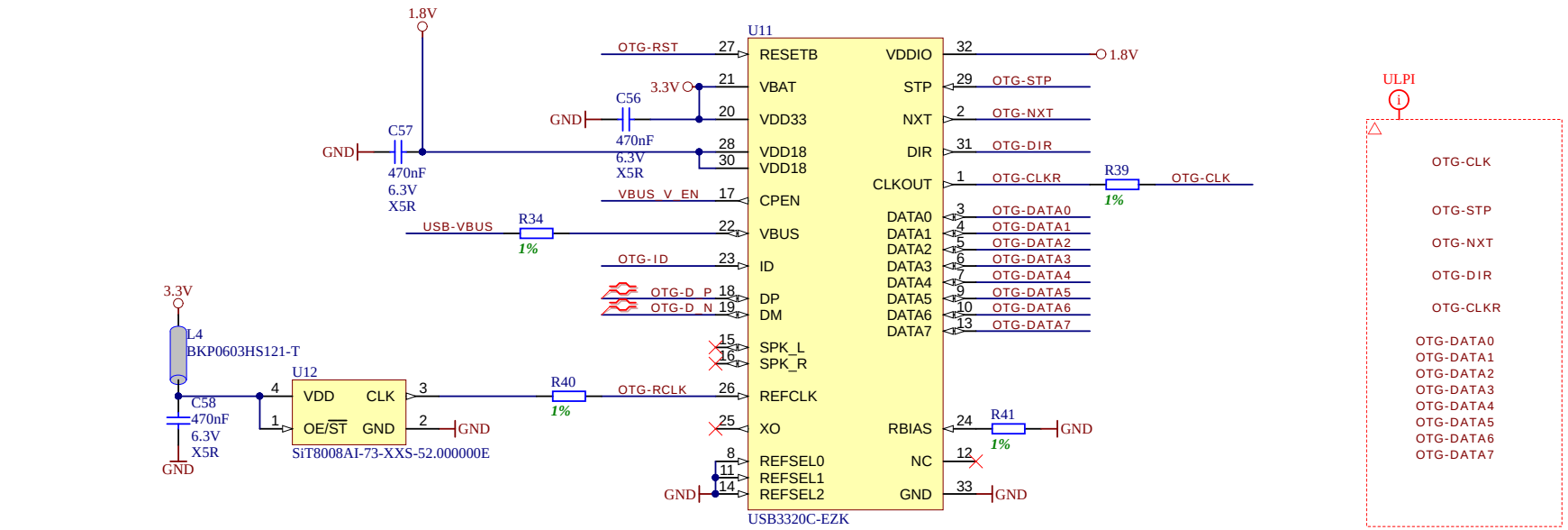

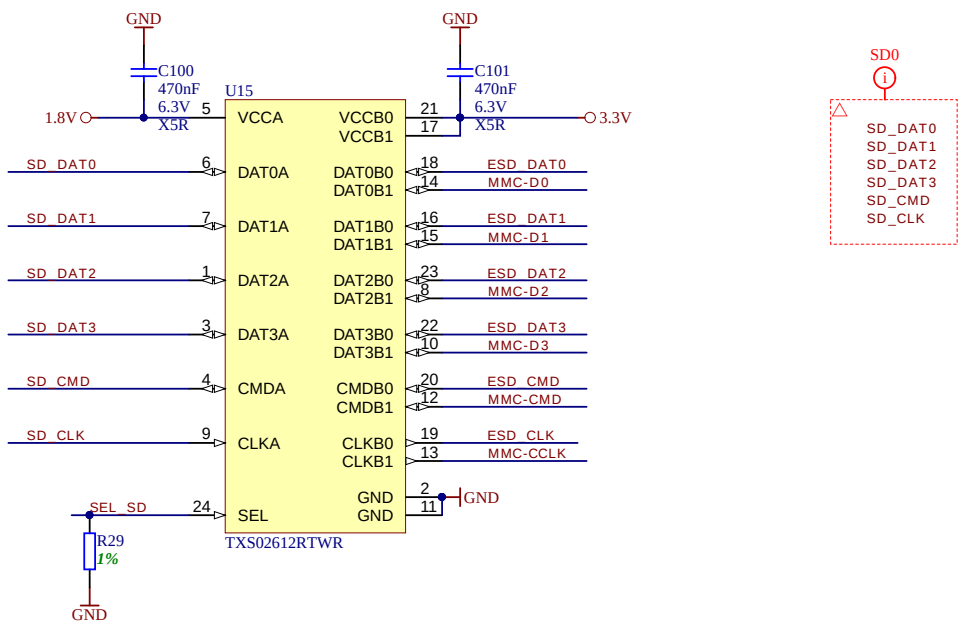

trenz electronic	Title: TE0729 - USB_PHY		
A4	Number: TE0729 2IFC1		Rev. 02
Date: 2014-03-05	Copyright: Trenz Electronic GmbH / TT		Page16 of 20
Filename: USB-PHY.SchDoc			

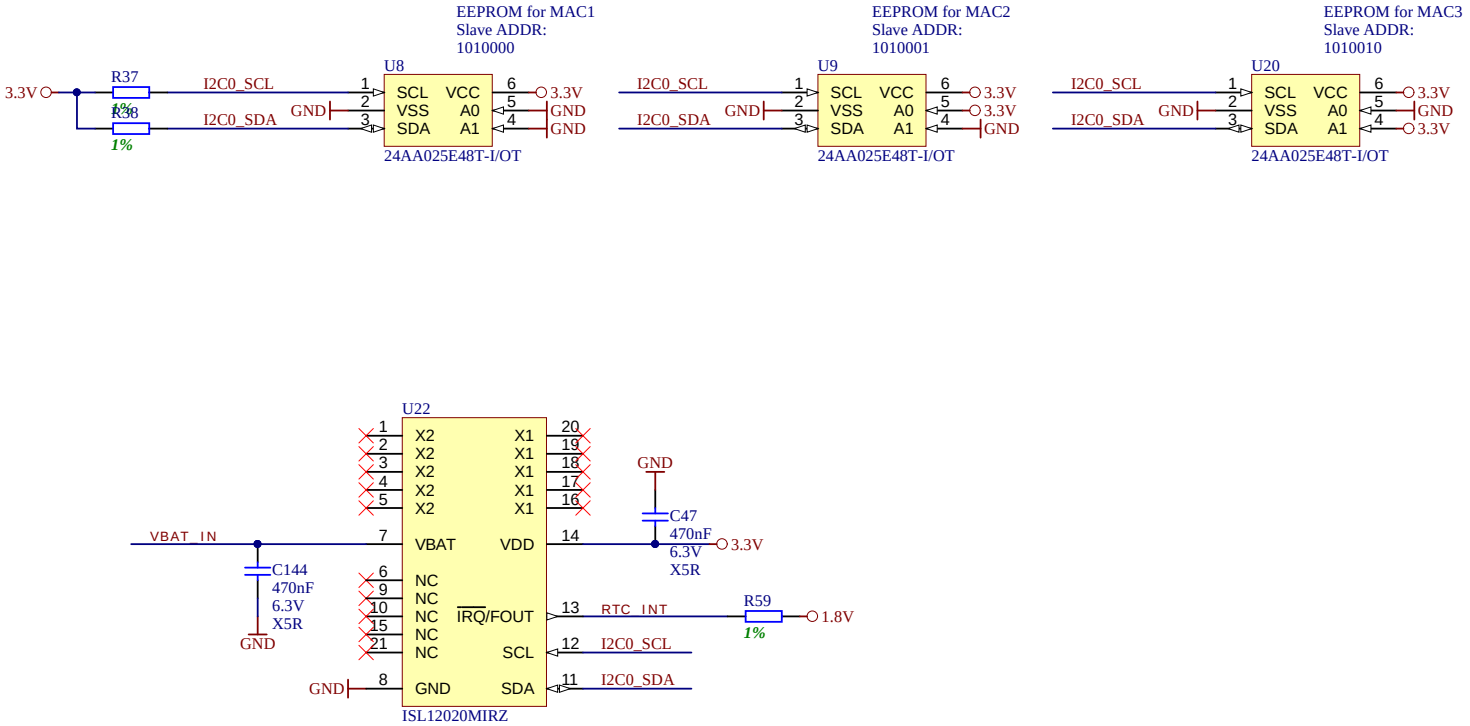

trenz electronic	Title: TE0729 - RTC		
A4	Number: TE0729 2IFC1		Rev. 02
Date: 2014-03-05	Copyright: Trenz Electronic GmbH / TT		Page17 of 20
Filename: SENSOR-RTC.SchDoc			

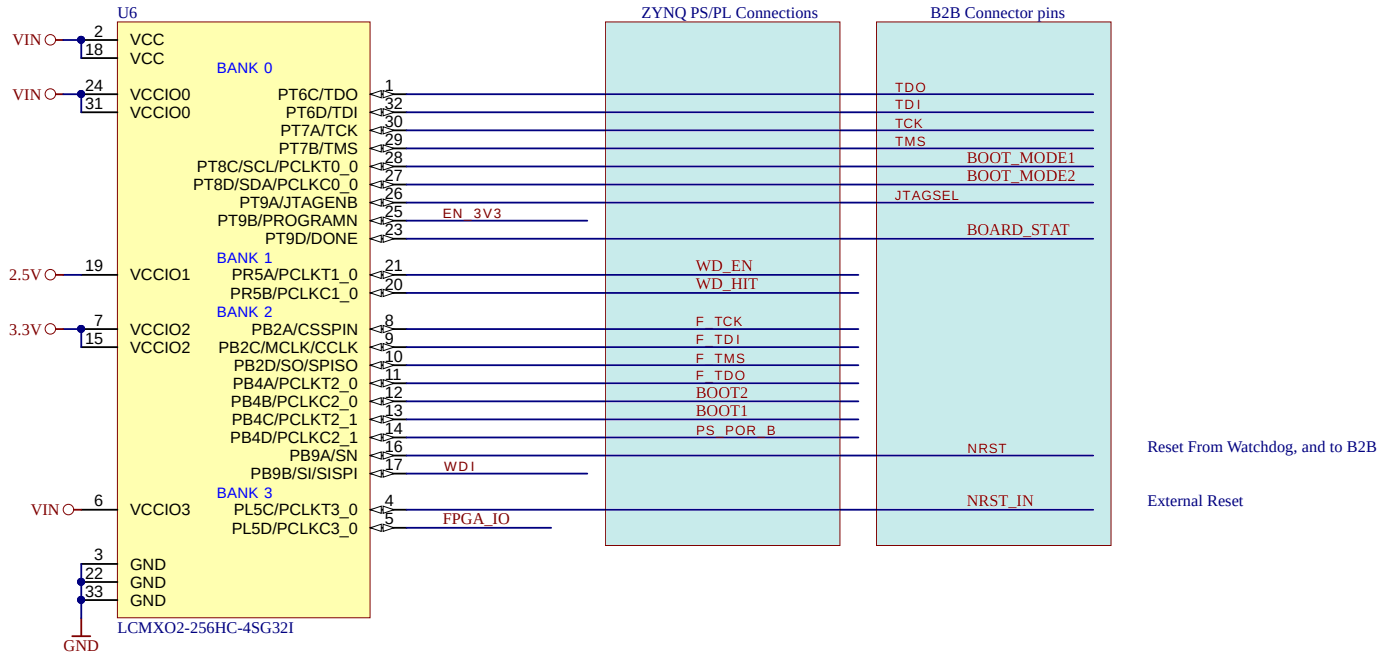

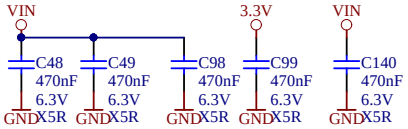

trenz electronic	Title: TE0729 - CPLD		
A4	Number: TE0729 2IFC1		Rev. 02
Date: 2016-05-02	Copyright: Trenz Electronic GmbH / TT		Page18 of 20
Filename: CPLD.SchDoc			

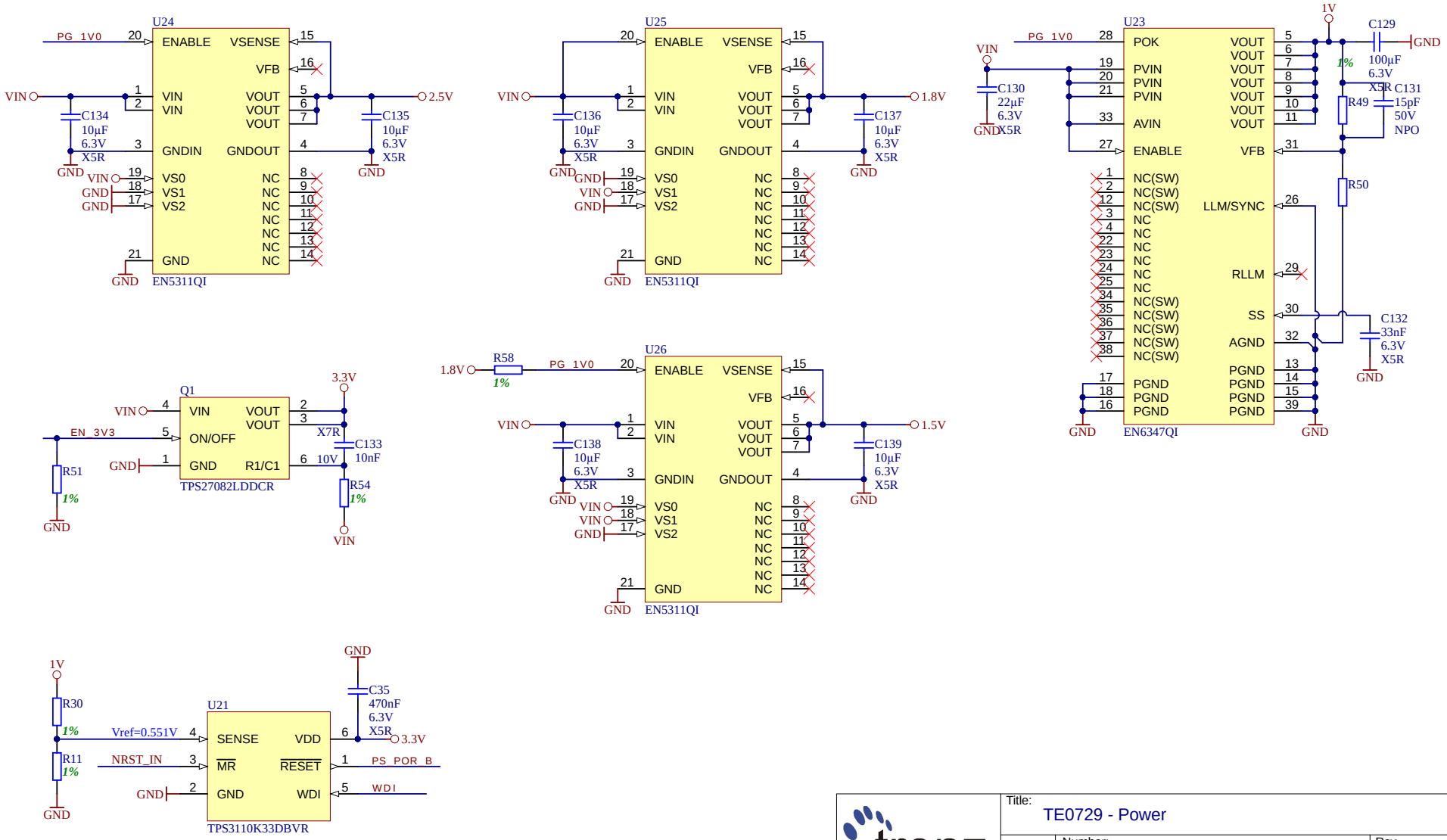

Title: TE0729 - Power		
A4	Number: TE0729 2IFC1	Rev. 02
Date: 2016-05-02	Copyright: Trenz Electronic GmbH / TT	Page19 of 20
Filename: Power.SchDoc		

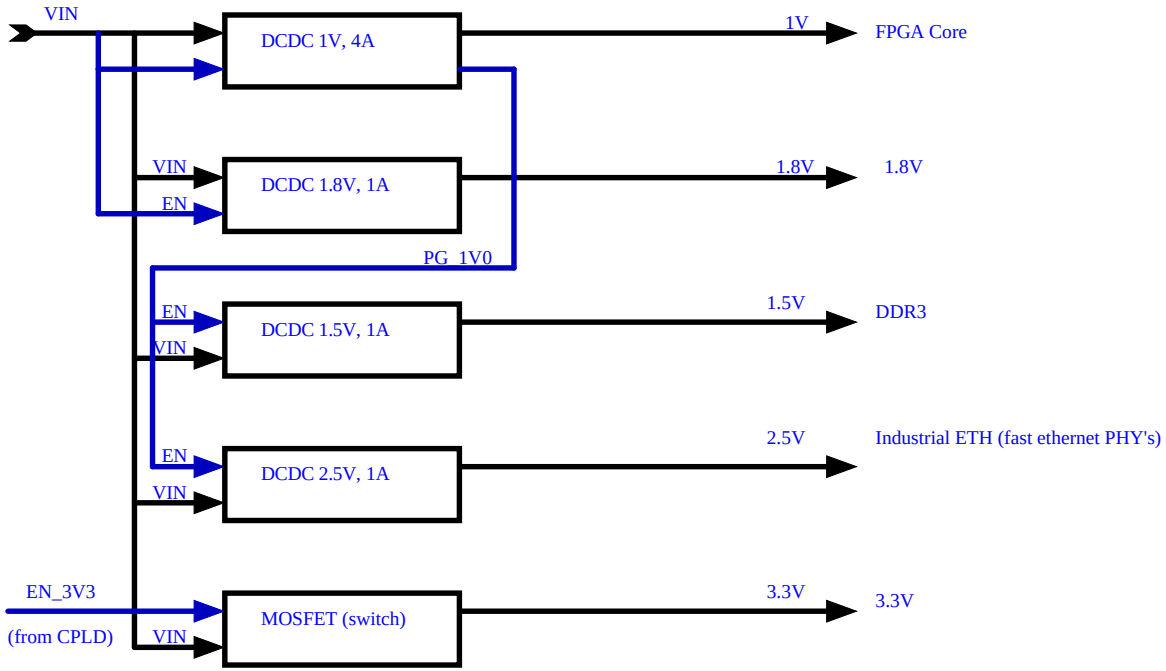

trenz electronic	Title: TE0729 - Power overview		
A4	Number: TE0729 2IFC1		Rev. 02
Date: 2016-05-02	Copyright: Trenz Electronic GmbH		Page20 of 20
Filename: PowerOverview.SchDoc			