U_J1
J1.SchDoc

U_J2
J2.SchDoc

U_J3
J3.SchDoc

U_J4
J4.SchDoc

U_DDR4-TERM
DDR4-TERM.SchDoc

U_B64
B64.SchDoc

U_B65
B65.SchDoc

U_B66
B66.SchDoc

U_B_GT
B_GT.SchDoc

U_B_PS_GT
B_PS_GT.SchDoc

U_PS_DDR
PS_DDR.SchDoc

U_B_MIO
B_MIO.SchDoc

U_B_HD
B_HD.SchDoc

U_Clock
Clock.SchDoc

U_CONFIG
CONFIG.SchDoc

U_DDR4-RAM
DDR4-RAM.SchDoc

U_DDR4-RAM_2
DDR4-RAM_2.SchDoc

U_DDR4-RAM_3
DDR4-RAM_3.SchDoc

U_DDR4-RAM_4
DDR4-RAM_4.SchDoc

U_DDR4-TERM
DDR4-TERM.SchDoc

U_ZU_POWER
ZU_POWER.SchDoc

U_ZU_PS_POWER
ZU_PS_POWER.SchDoc

U_POWER
POWER.SchDoc

U_POWER_2
POWER_2.SchDoc

U_POWER_4
POWER_4.SchDoc

U_REV_CH
Revision_Changes.SchDoc

Special notes:

GND
Mount.Hole 3.2mm für Unterlegscheibe

GND
Mount.Hole 3.2mm für Unterlegscheibe

GND
Mount.Hole 3.2mm für Unterlegscheibe

GND
Mount.Hole 3.2mm für Unterlegscheibe

GND
Mount.Hole 3.2mm für Unterlegscheibe

GND
Mount.Hole 3.2mm für Unterlegscheibe

GND
Mount.Hole 3.2mm für Unterlegscheibe

GND
Mount.Hole 3.2mm für Unterlegscheibe

PM1 PM2
FIDU-DOT - mini FIDU-DOT - mini
PM3 PM4
FIDU-DOT - mini FIDU-DOT - mini
PM5 PM6
FIDU-DOT - mini FIDU-DOT - mini

LOGO1
TE Logo PRINT Layer
LOGO PRINT

Serial
Serial
Serialnumber 6,3 x 6.3mm

S/N
1 0R 2
Serialnumber

Assembly variant	4AE11-AI
Created by	VY
Modified by	VY
Modified at	2021-03-12
SVN Revision	9226

trenz electronic

Title: TE0803			
A4	Number: TE0803 4AE11-AI		Rev. 03
Date: 2019-02-21	Copyright: Trenz Electronic GmbH / TT		Page1 of 26
Filename: TE0803.SchDoc			

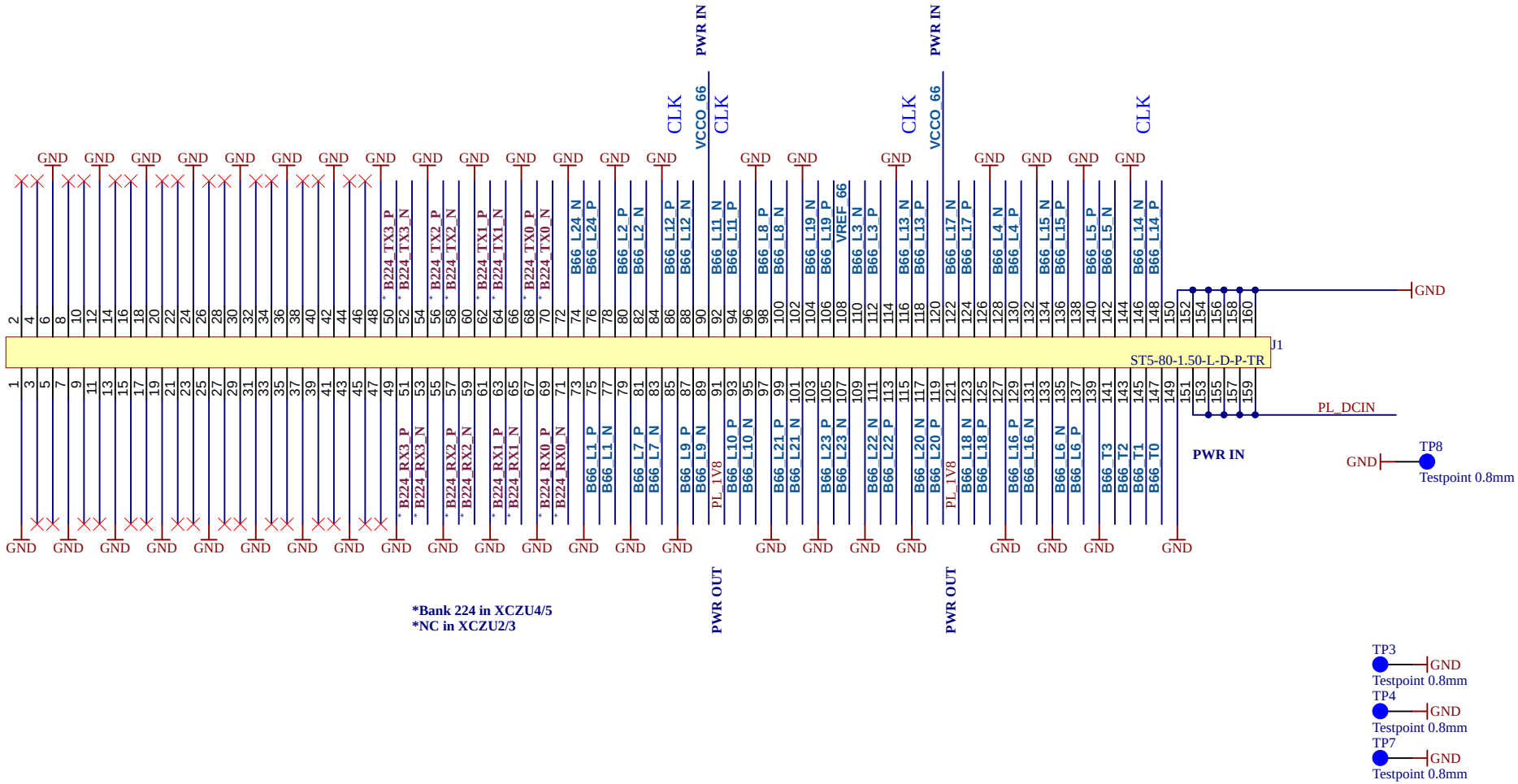

trenz electronic	Title: TE0803 - Connector J1		
A4	Number: TE0803 4AE11-AI		Rev. 03
Date: 2019-02-21	Copyright: Trenz Electronic GmbH / TT		Page2 of 26
	Filename: J1.SchDoc		

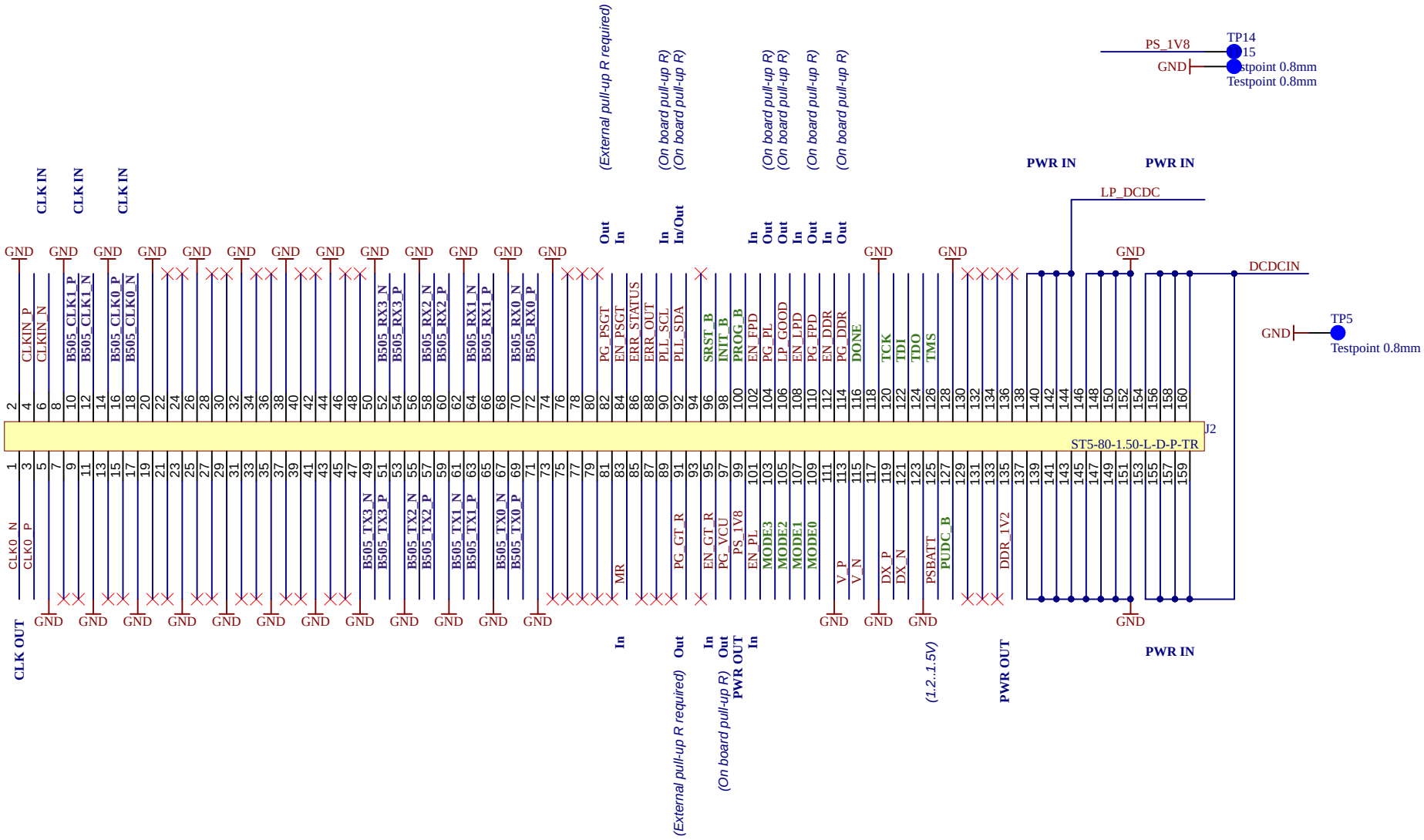

trenz electronic	Title: TE0803 - Connector J2		
A4	Number: TE0803 4AE11-AI		Rev. 03
Date: 2019-02-21	Copyright: Trenz Electronic GmbH / TT		Page3 of 26
Filename: J2.SchDoc			

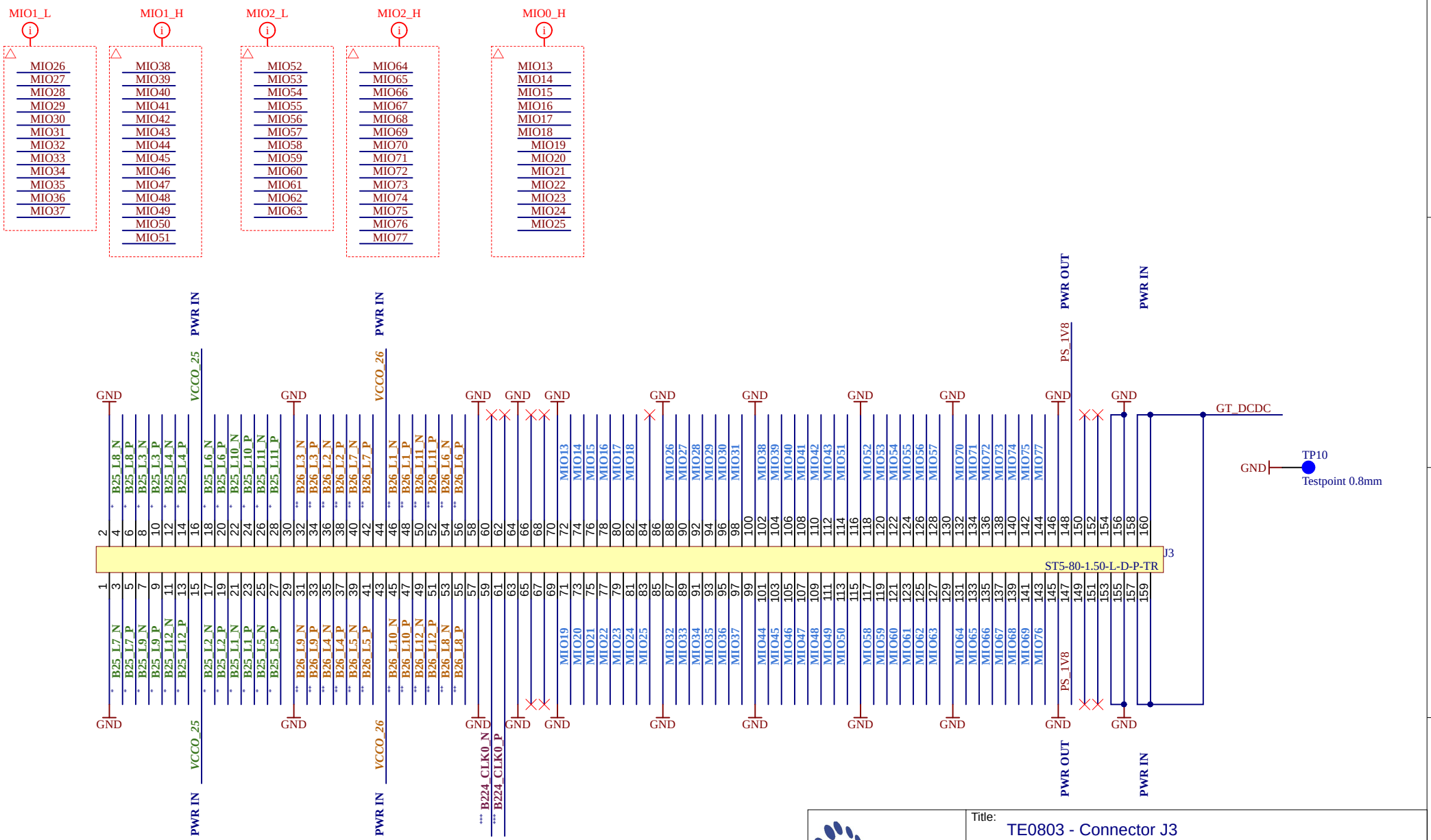

trenz electronic	Title: TE0803 - Connector J3		
A4	Number: TE0803 4AE11-AI		Rev. 03
Date: 2019-02-21	Copyright: Trenz Electronic GmbH / TT		Page4 of 26
Filename: J3.SchDoc			

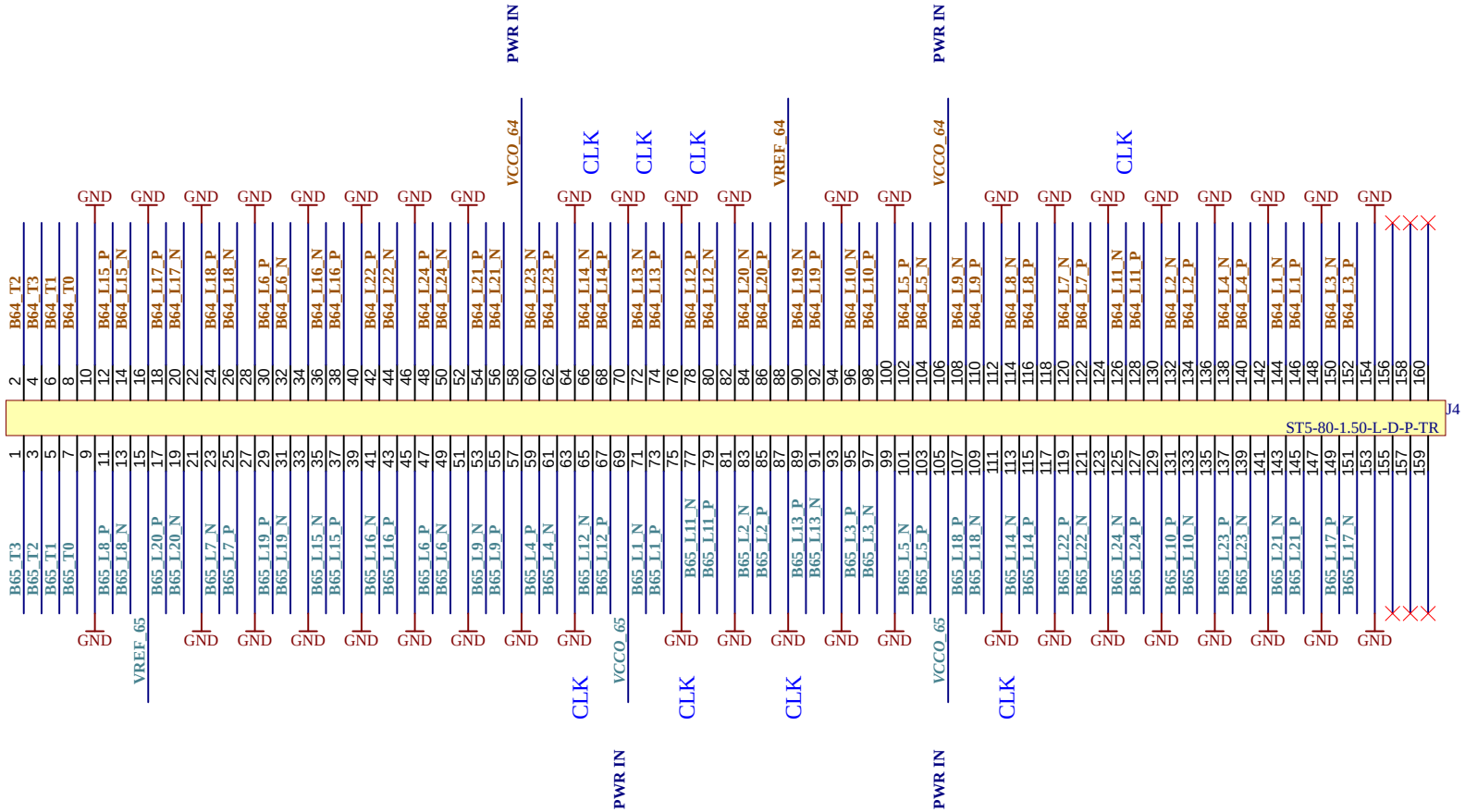

trenz electronic	Title: TE0803 - Connector J4		
A4	Number: TE0803 4AE11-AI		Rev. 03
Date: 2019-02-21	Copyright: Trenz Electronic GmbH / TT		Page5 of 26
Filename: J4.SchDoc			

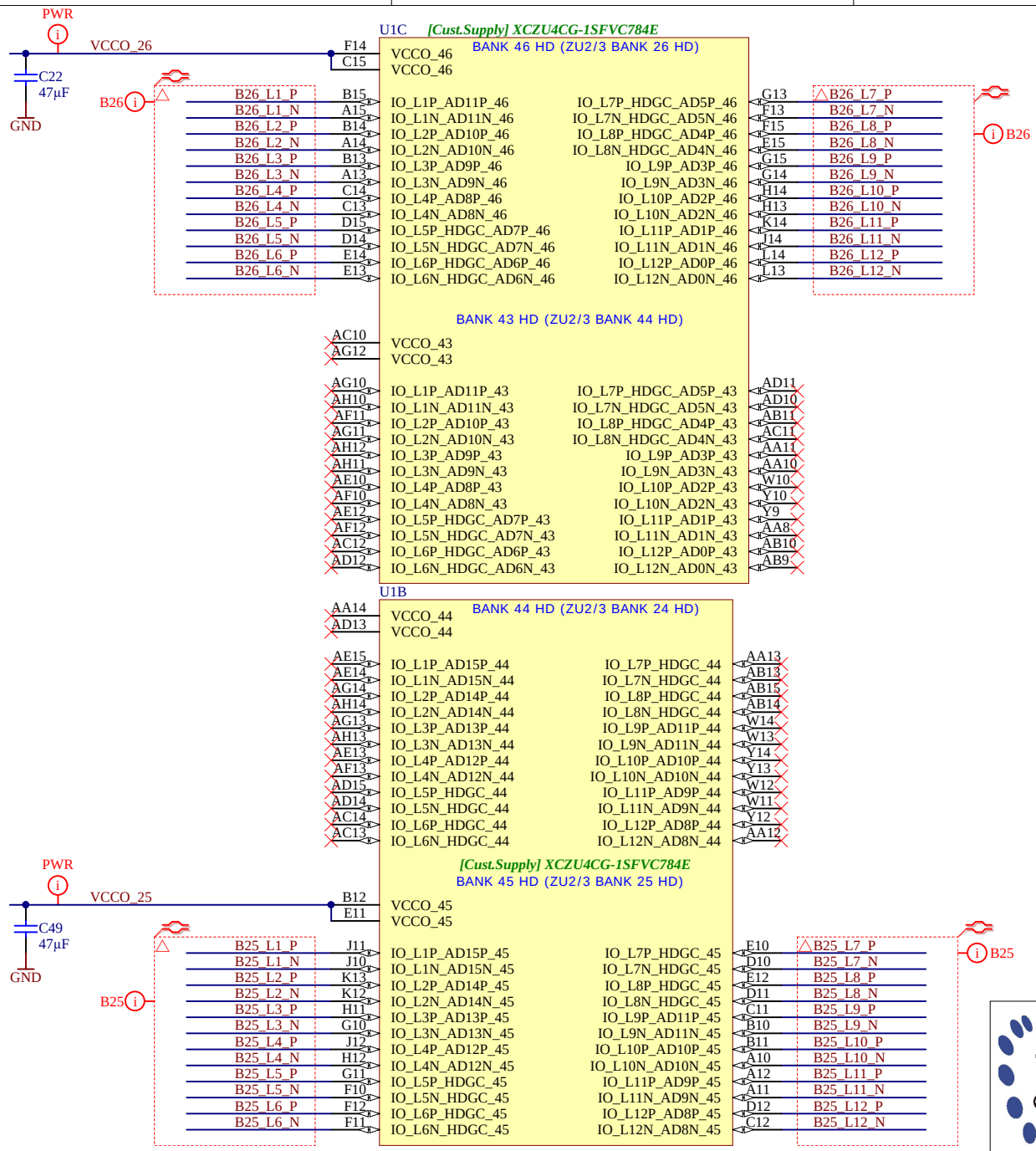

trenz electronic	Title: TE0803 - HD Banks		
A4	Number: TE0803 4AE11-AI		Rev. 03
Date: 2019-02-21	Copyright: Trenz Electronic GmbH / TT		Page6 of 26
	Filename: B_HD.SchDoc		

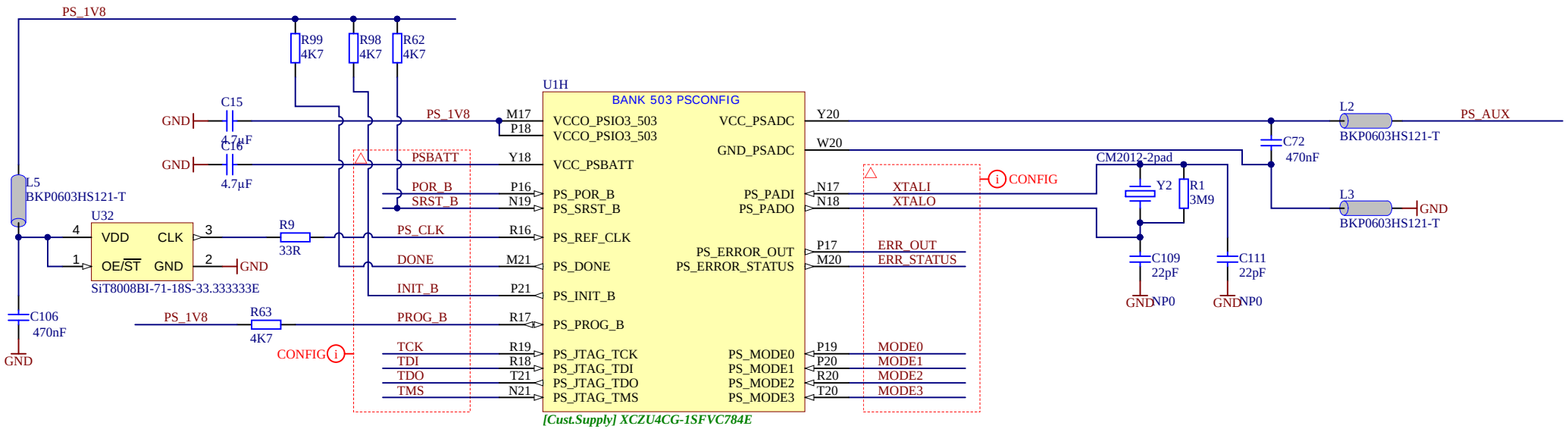

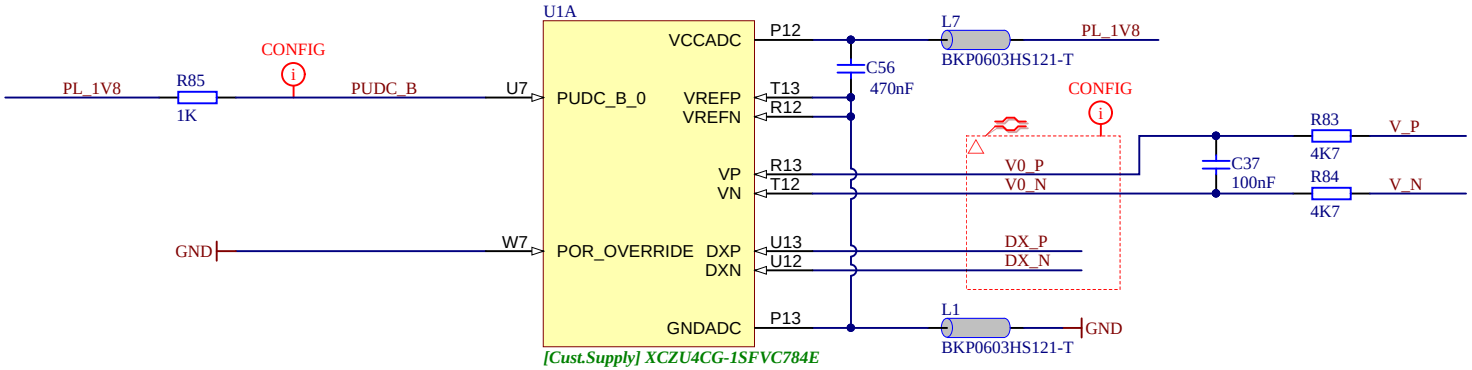

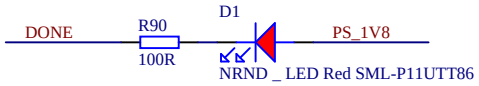

trenz electronic	Title: TE0803 - Config		
A4	Number: TE0803 4AE11-AI		Rev. 03
Date: 2019-02-21	Copyright: Trenz Electronic GmbH / TT		Page7 of 26
Filename: CONFIG.SchDoc			

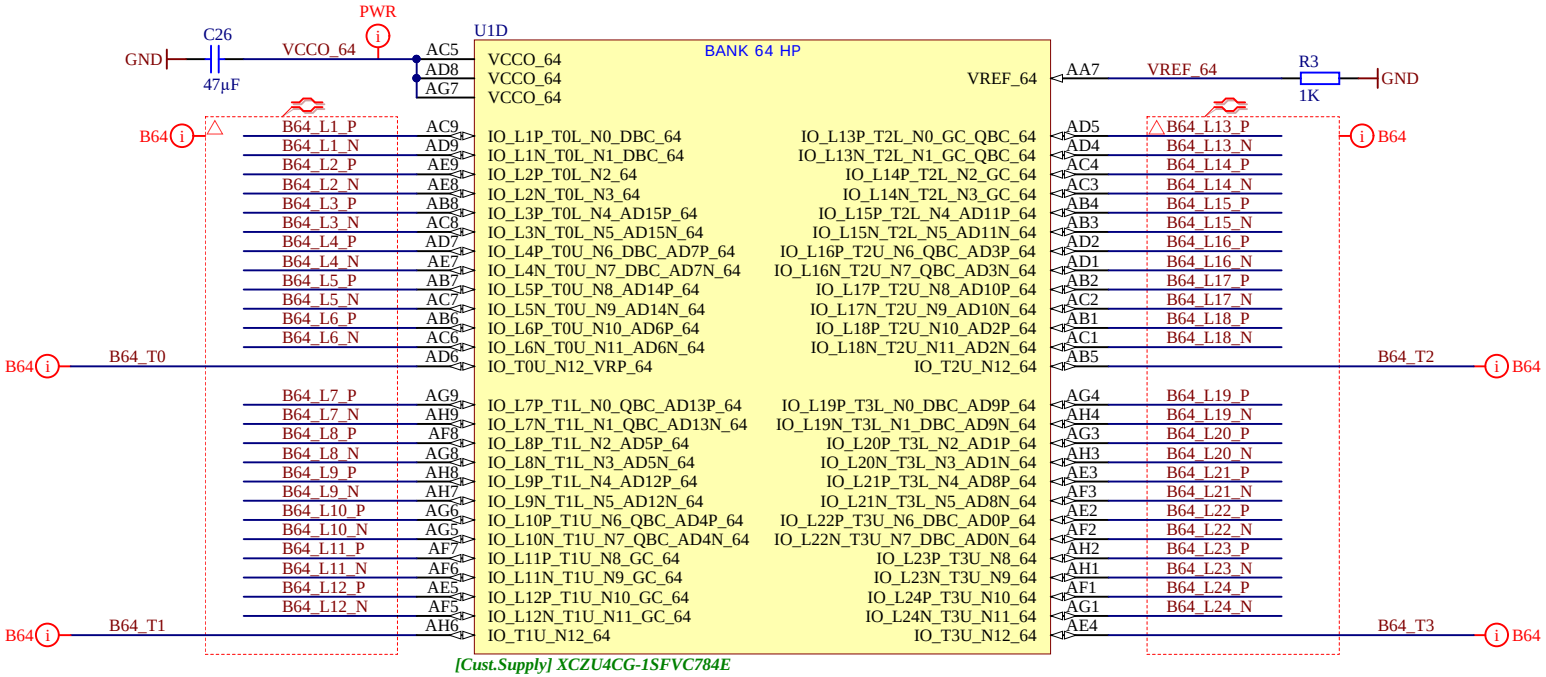

trenz electronic	Title: TE0803 - B64		
A4	Number: TE0803 4AE11-AI		Rev. 03
Date: 2019-02-21	Copyright: Trenz Electronic GmbH / TT		Page8 of 26
Filename: B64.SchDoc			

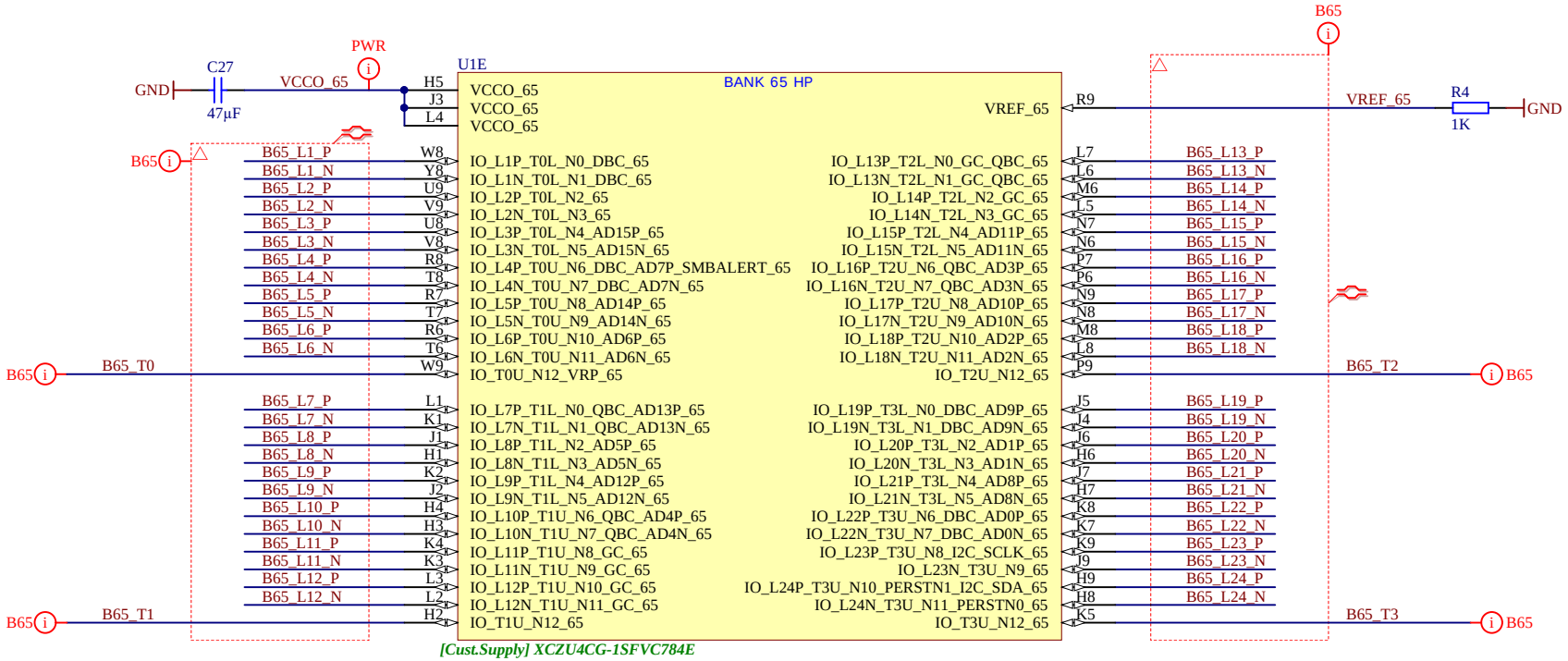

trenz electronic	Title: TE0803 - B65		
A4	Number: TE0803 4AE11-AI		Rev. 03
Date: 2019-02-21	Copyright: Trenz Electronic GmbH / TT		Page9 of 26
Filename: B65.SchDoc			

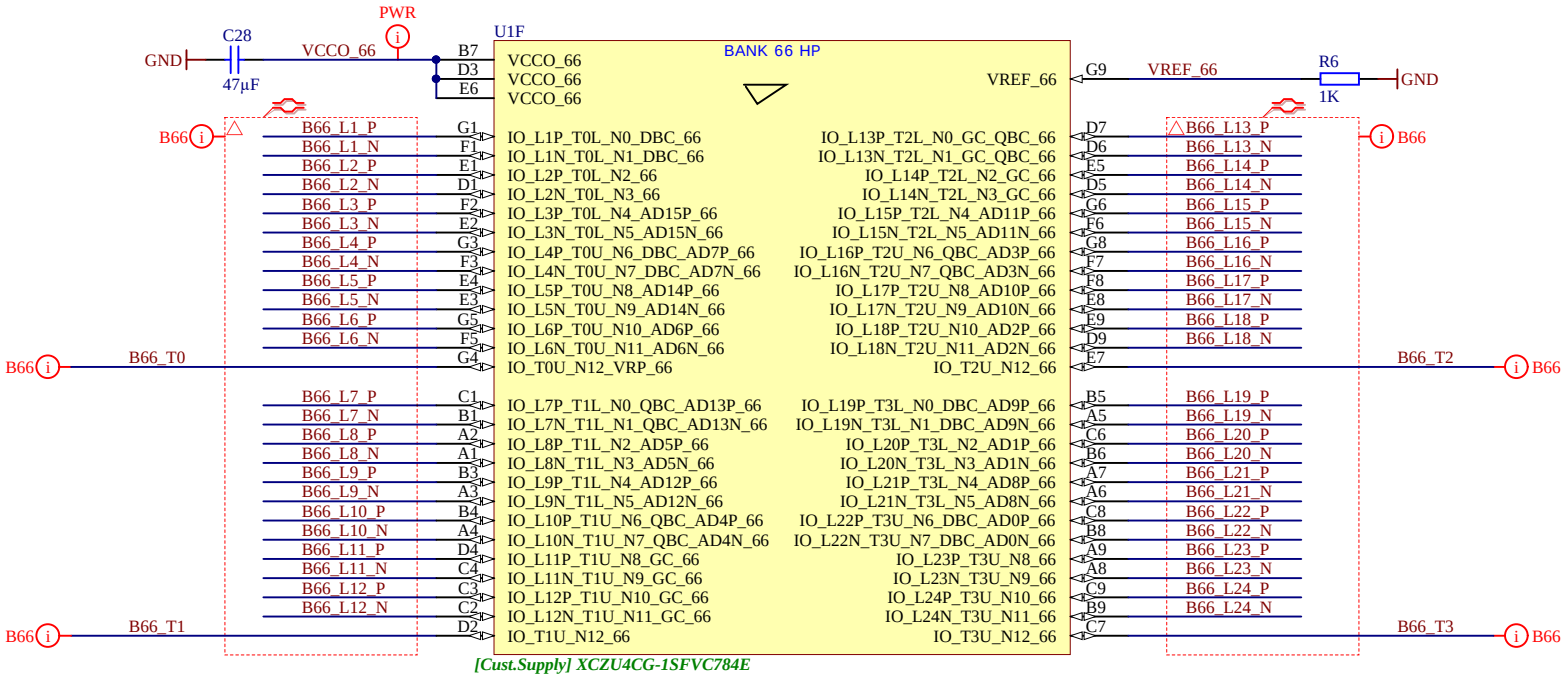

trenz electronic	Title: TE0803 - B66		
A4	Number: TE0803 4AE11-AI		Rev. 03
Date: 2019-02-21	Copyright: Trenz Electronic GmbH / TT		Page10 of 26
Filename: B66.SchDoc			

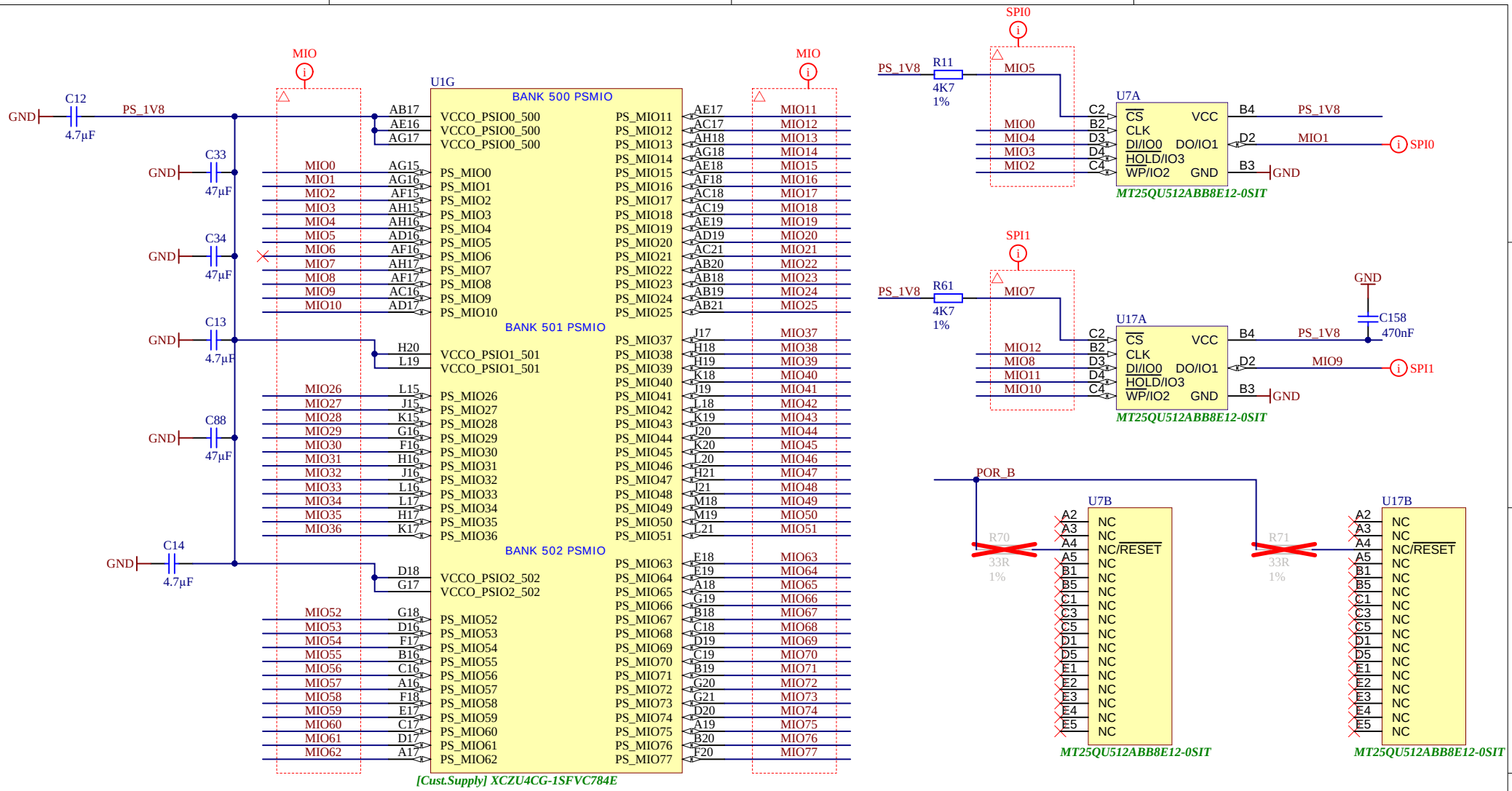

Title: TE0803 - MIO Banks			
A4	Number: TE0803 4AE11-AI		Rev. 03
Date: 2019-02-21	Copyright: Trenz Electronic GmbH / TT		Page11 of 26
Filename: B_MIO.SchDoc			

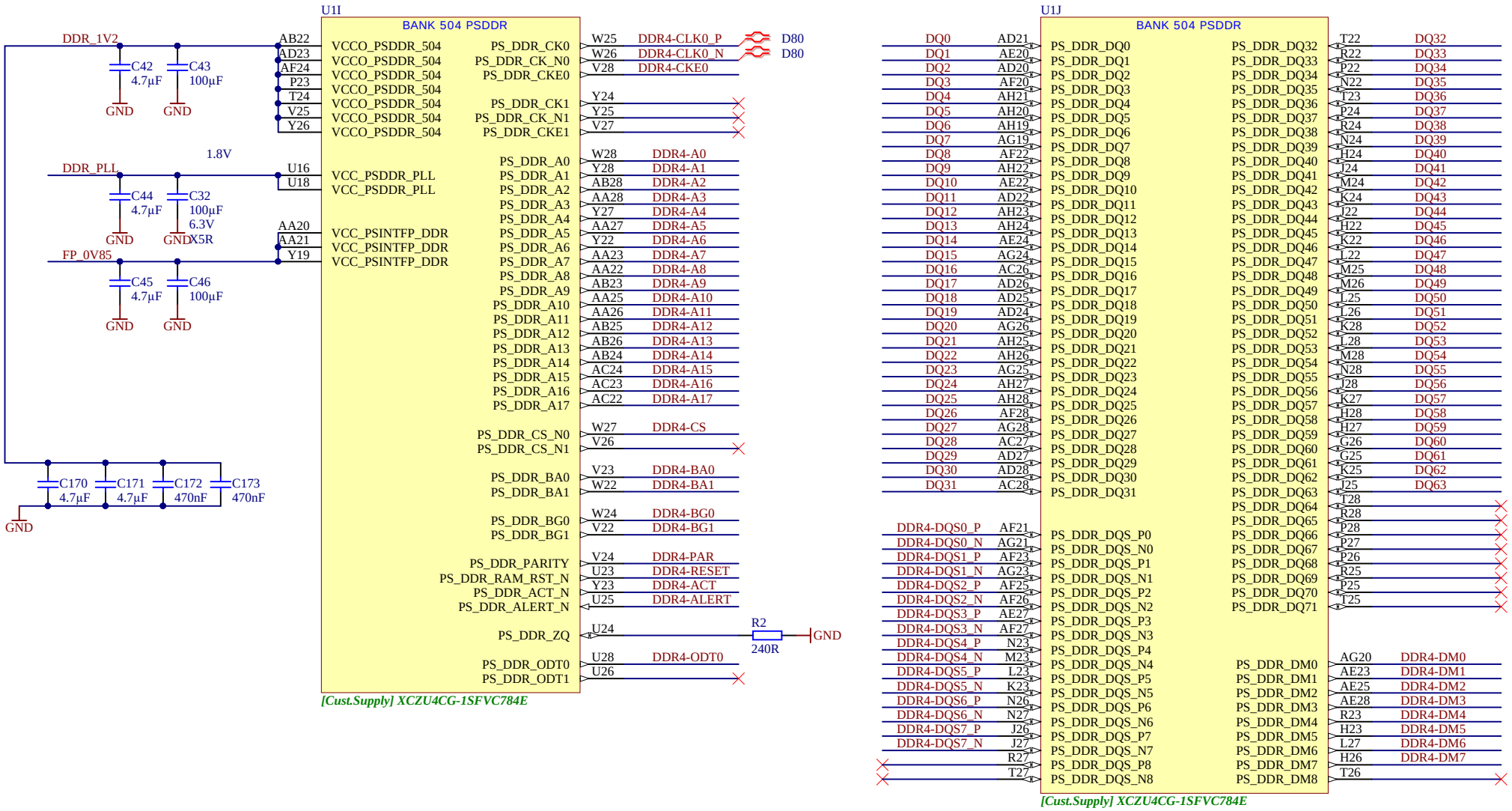

trenz electronic	Title: TE0803 - PS_DDR		
A4	Number: TE0803 4AE11-AI		Rev. 03
Date: 2019-02-21	Copyright: Trenz Electronic GmbH / TT		Page12 of 26
Filename: PS_DDR.SchDoc			

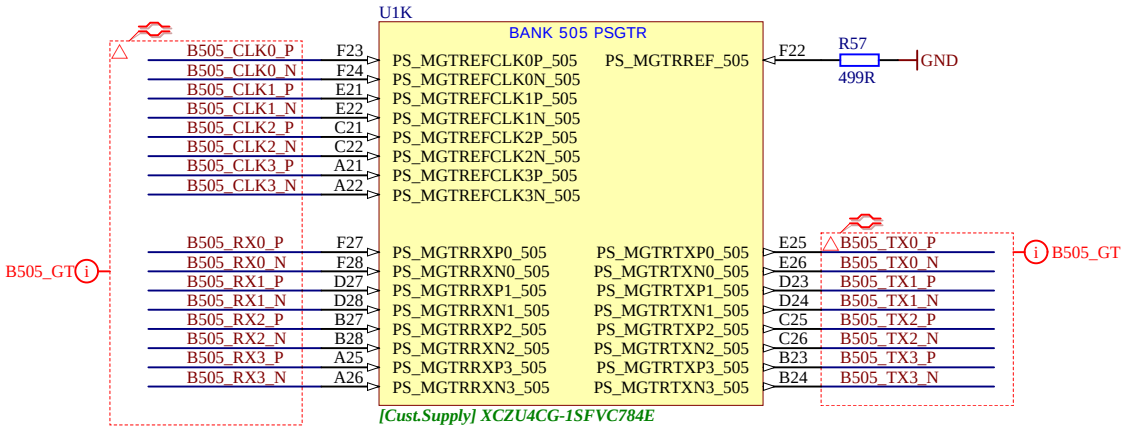

trenz electronic	Title: TE0803 - PS_GT		
A4	Number: TE0803 4AE11-AI		Rev. 03
Date: 2019-02-21	Copyright: Trenz Electronic GmbH / TT		Page13 of 26
Filename: B_PS_GT.SchDoc			

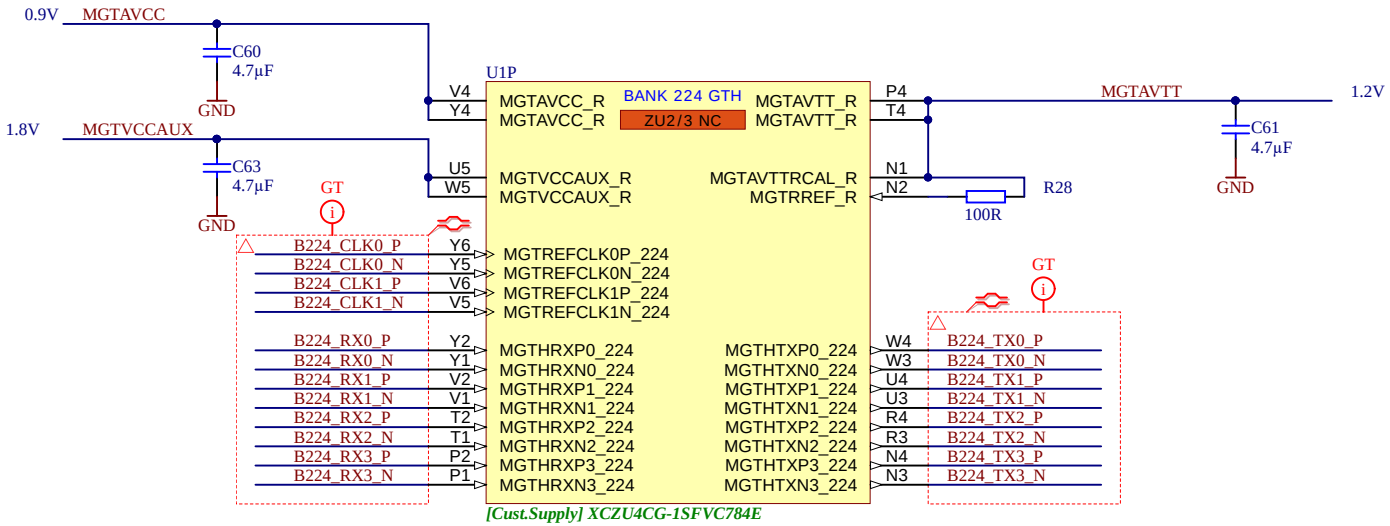

trenz electronic	Title: TE0803 - B224GTH		
A4	Number: TE0803 4AE11-AI		Rev. 03
Date: 2019-02-21	Copyright: Trenz Electronic GmbH / TT		Page14 of 26
Filename: B_GT.SchDoc			

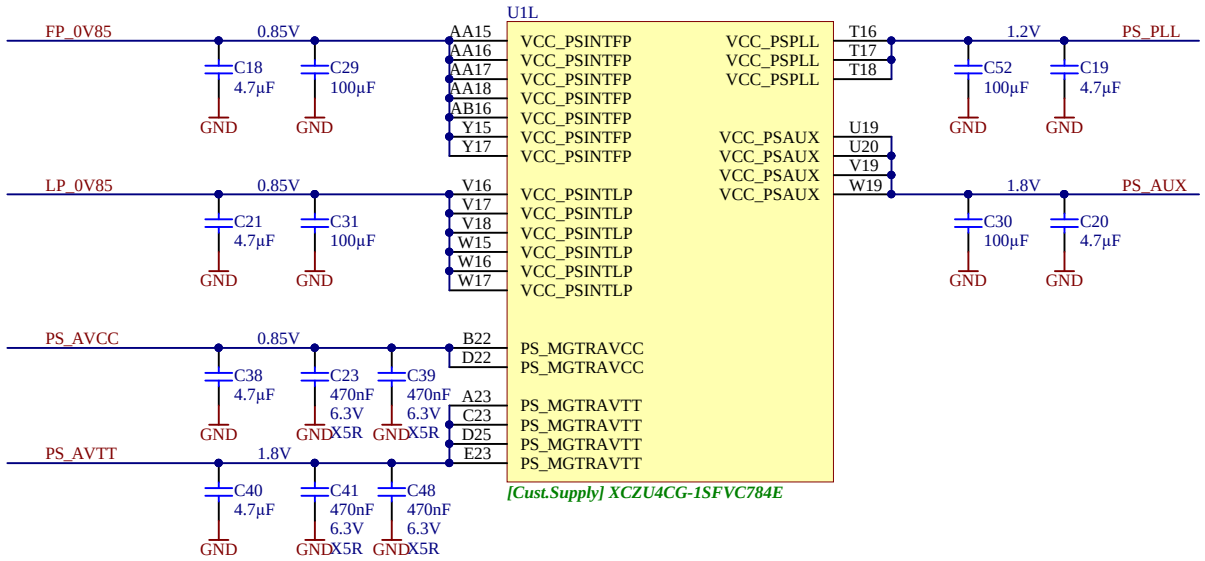

trenz electronic	Title: TE0803 - ZU_PS_POWER		
A4	Number: TE0803 4AE11-AI		Rev. 03
Date: 2019-02-21	Copyright: Trenz Electronic GmbH / TT		Page15 of 26
Filename: ZU_PS_POWER.SchDoc			

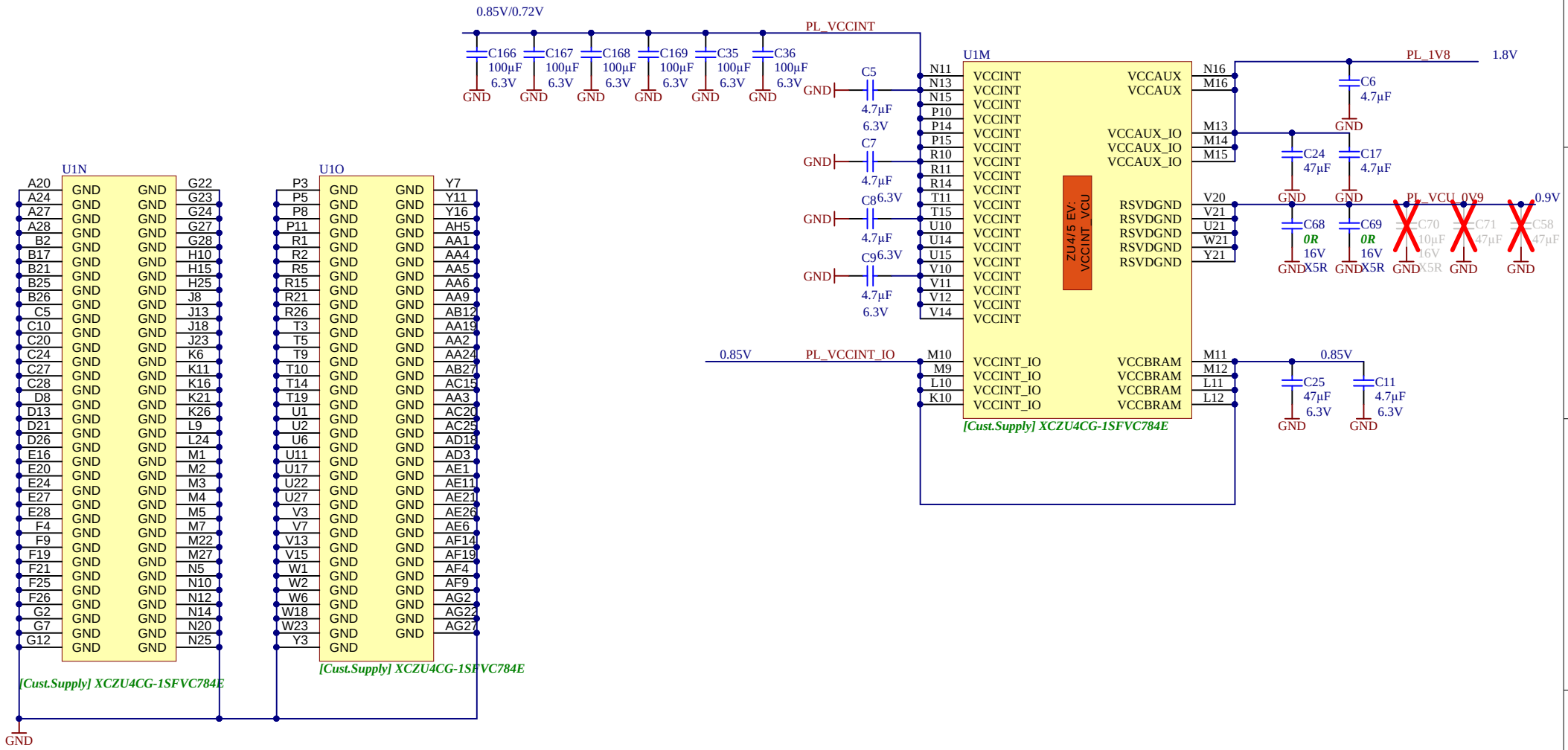

trenz electronic	Title: TE0803 - ZU_POWER		
A4	Number: TE0803 4AE11-AI		Rev. 03
Date: 2019-02-21	Copyright: Trenz Electronic GmbH / TT		Page16 of 26
	Filename: ZU_POWER.SchDoc		

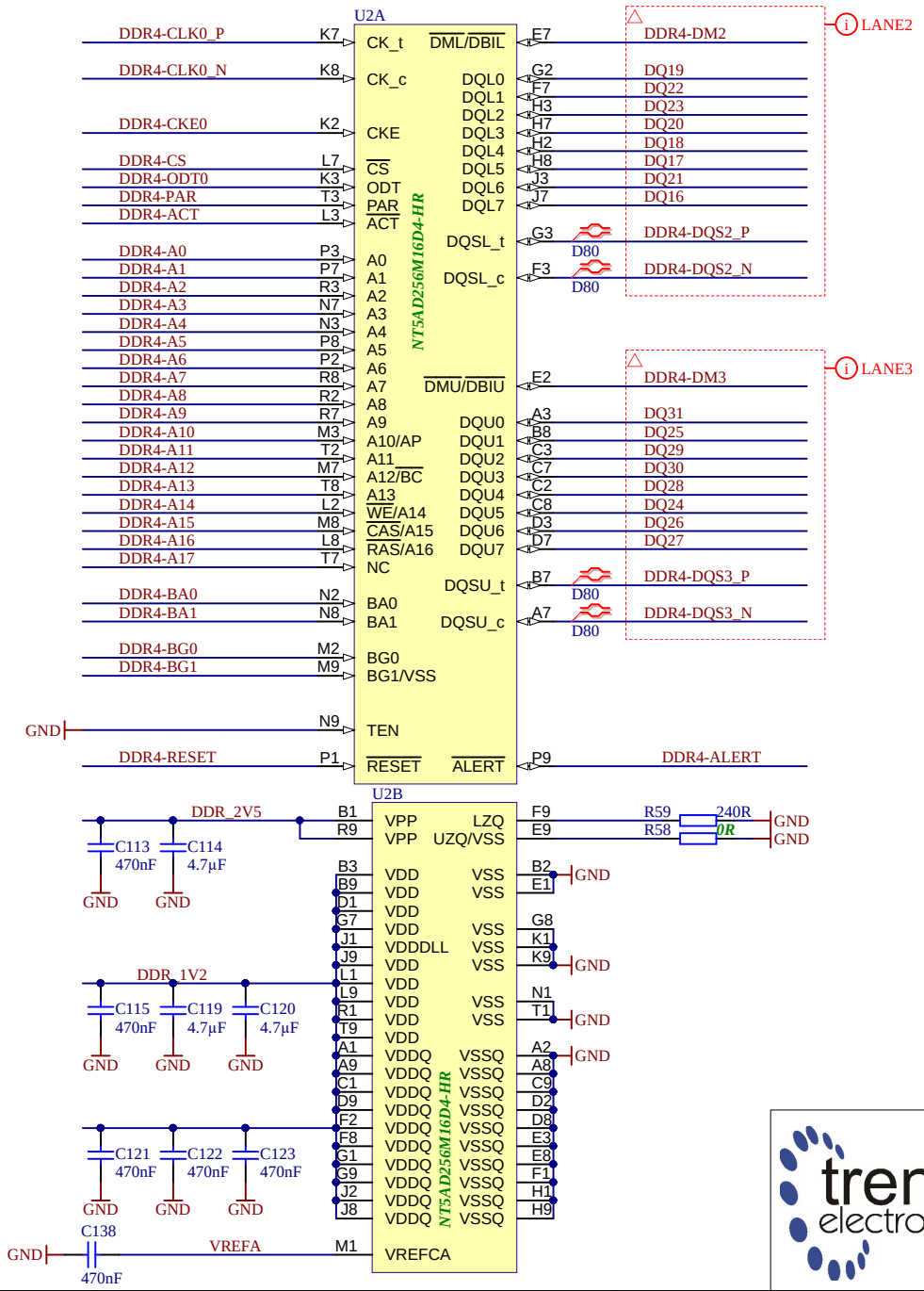

trenz electronic	Title: TE0803 - DDR4_1_RAM		
A4	Number: TE0803 4AE11-AI		Rev. 03
Date: 2019-02-21	Copyright: Trenz Electronic GmbH / TT		Page17 of 26
Filename: DDR4-RAM.SchDoc			

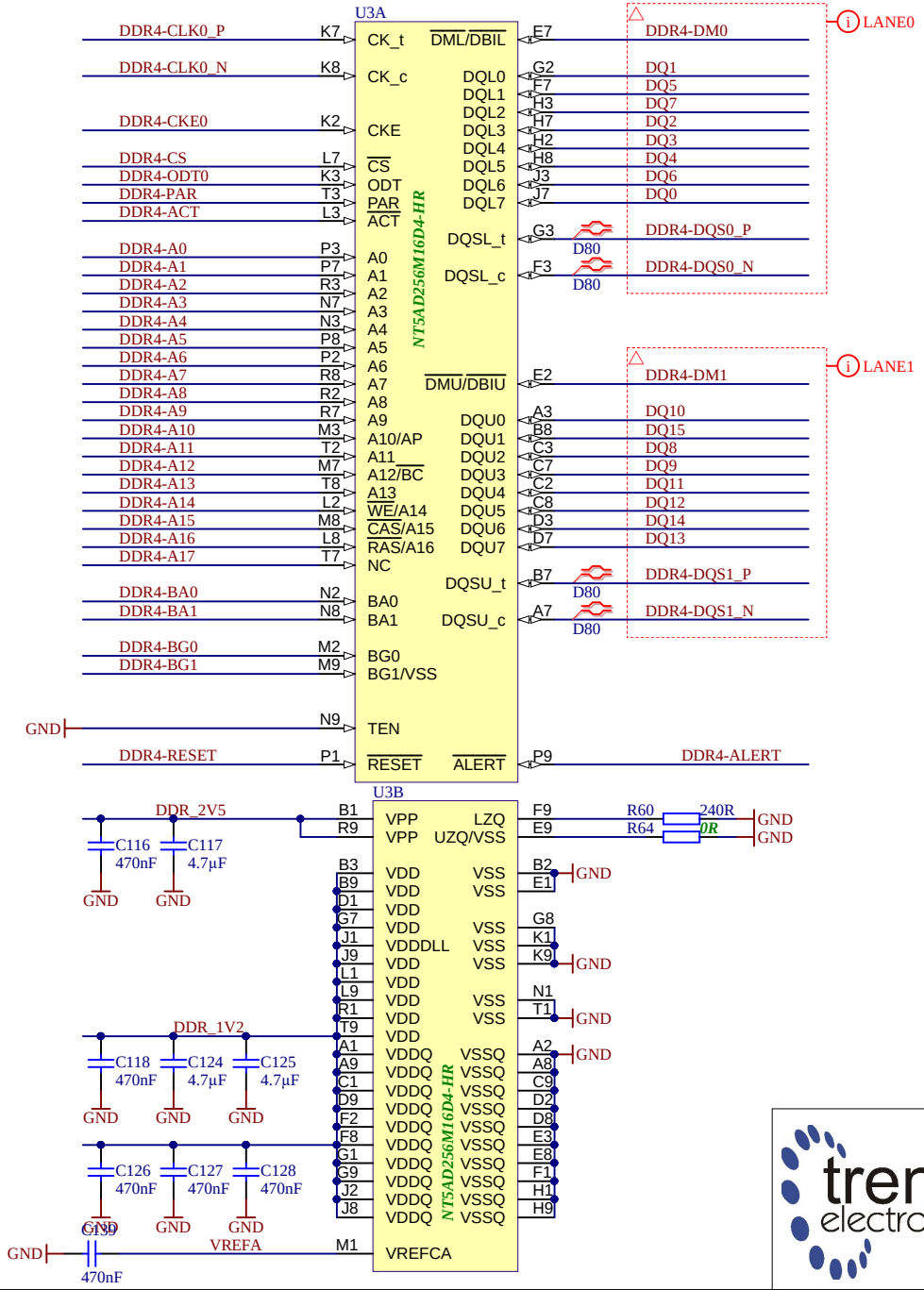

trenz electronic	Title: TE0803 - DDR4_2_RAM		
A4	Number: TE0803 4AE11-AI		Rev. 03
Date: 2019-02-21	Copyright: Trenz Electronic GmbH / TT		Page18 of 26
Filename: DDR4-RAM_2.SchDoc			

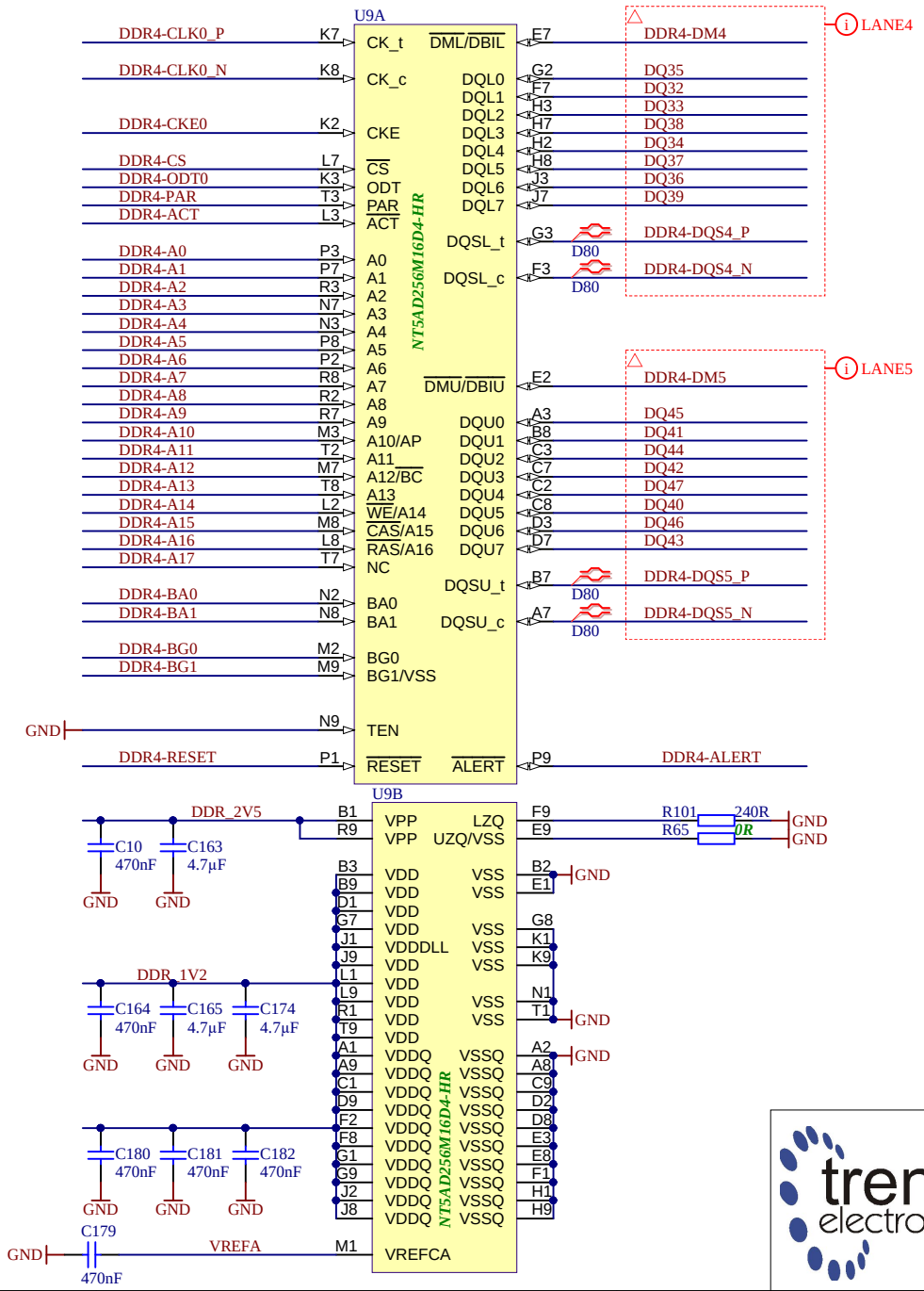

trenz electronic	Title: TE0803 - DDR4_3_RAM		
A4	Number: TE0803 4AE11-AI		Rev. 03
Date: 2019-02-21	Copyright: Trenz Electronic GmbH / TT		Page19 of 26
Filename: DDR4-RAM_3.SchDoc			

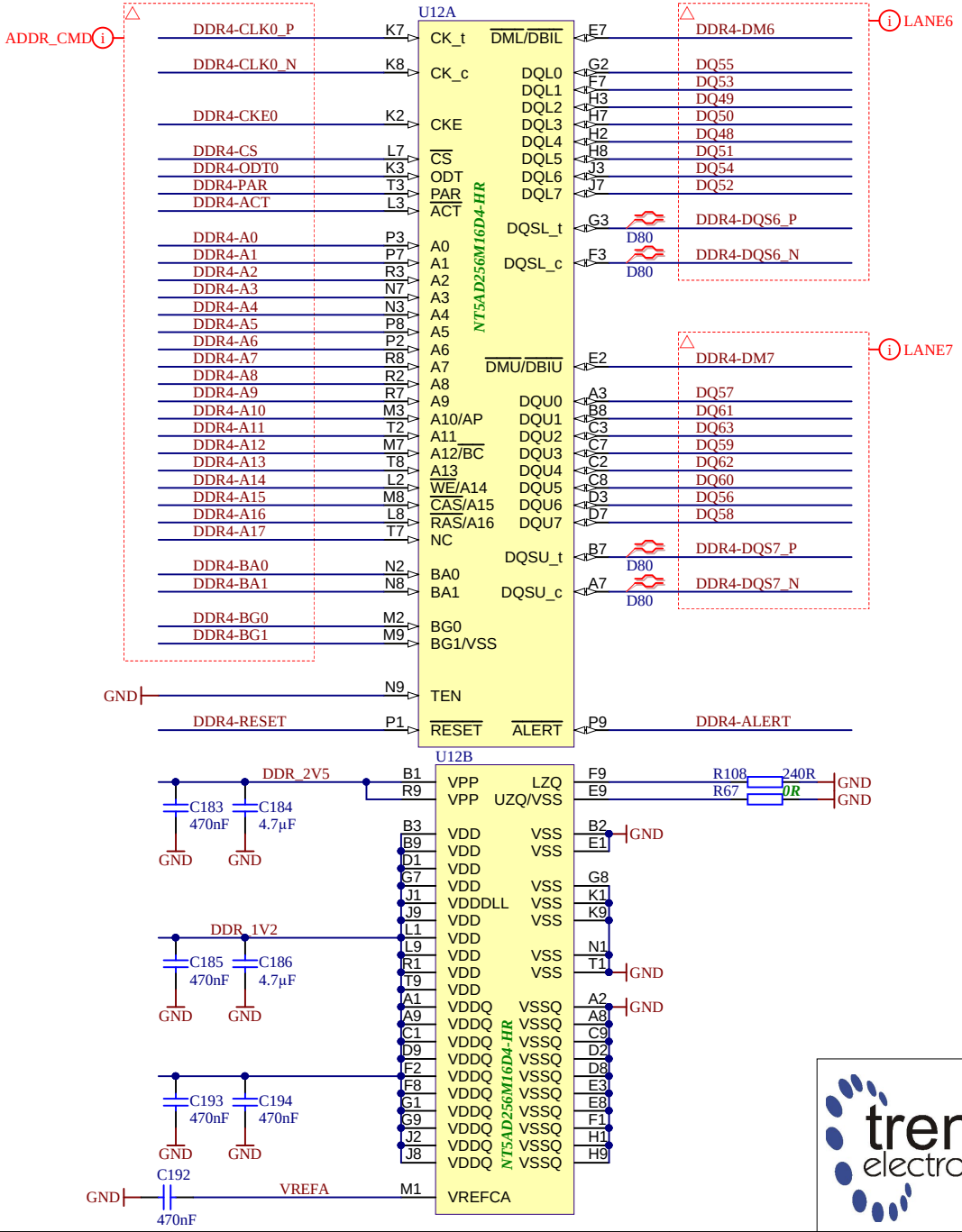

trenz electronic	Title: TE0803 - DDR4_4_RAM		
A4	Number: TE0803 4AE11-AI		Rev. 03
Date: 2019-02-21	Copyright: Trenz Electronic GmbH / TT		Page20 of 26
Filename: DDR4-RAM_4.SchDoc			

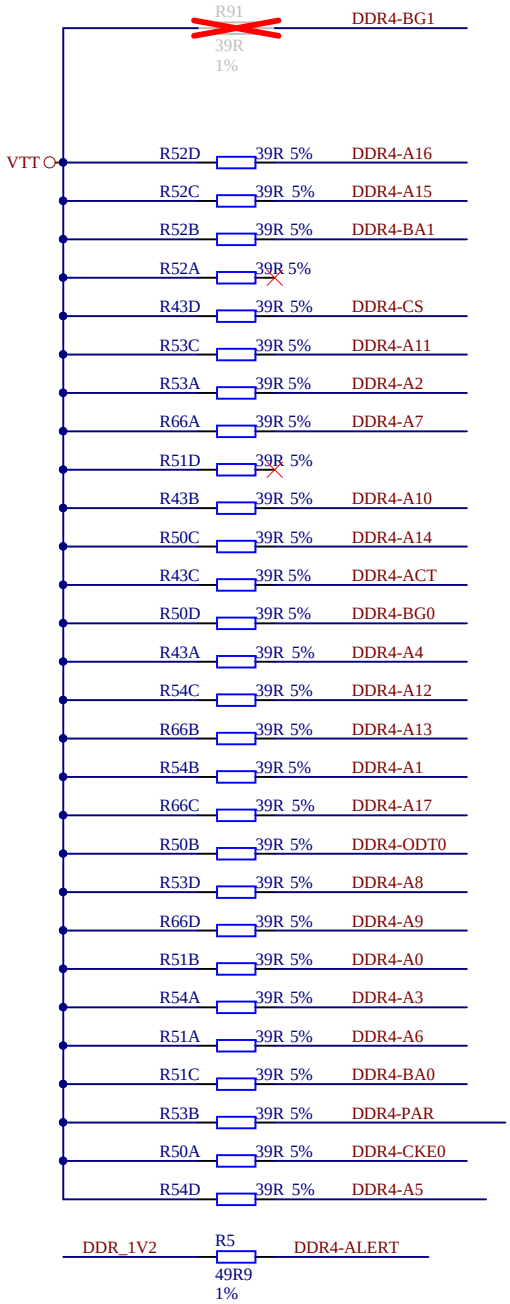

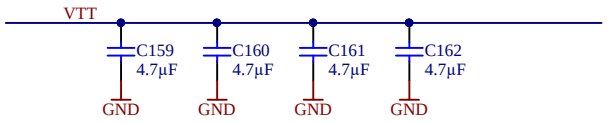

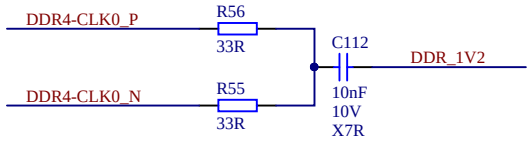

trenz electronic	Title: TE0803 - DDR4_TERM		
A4	Number: TE0803 4AE11-AI		Rev. 03
Date: 2019-02-21	Copyright: Trenz Electronic GmbH / TT		Page21 of 26
Filename: DDR4-TERM.SchDoc			

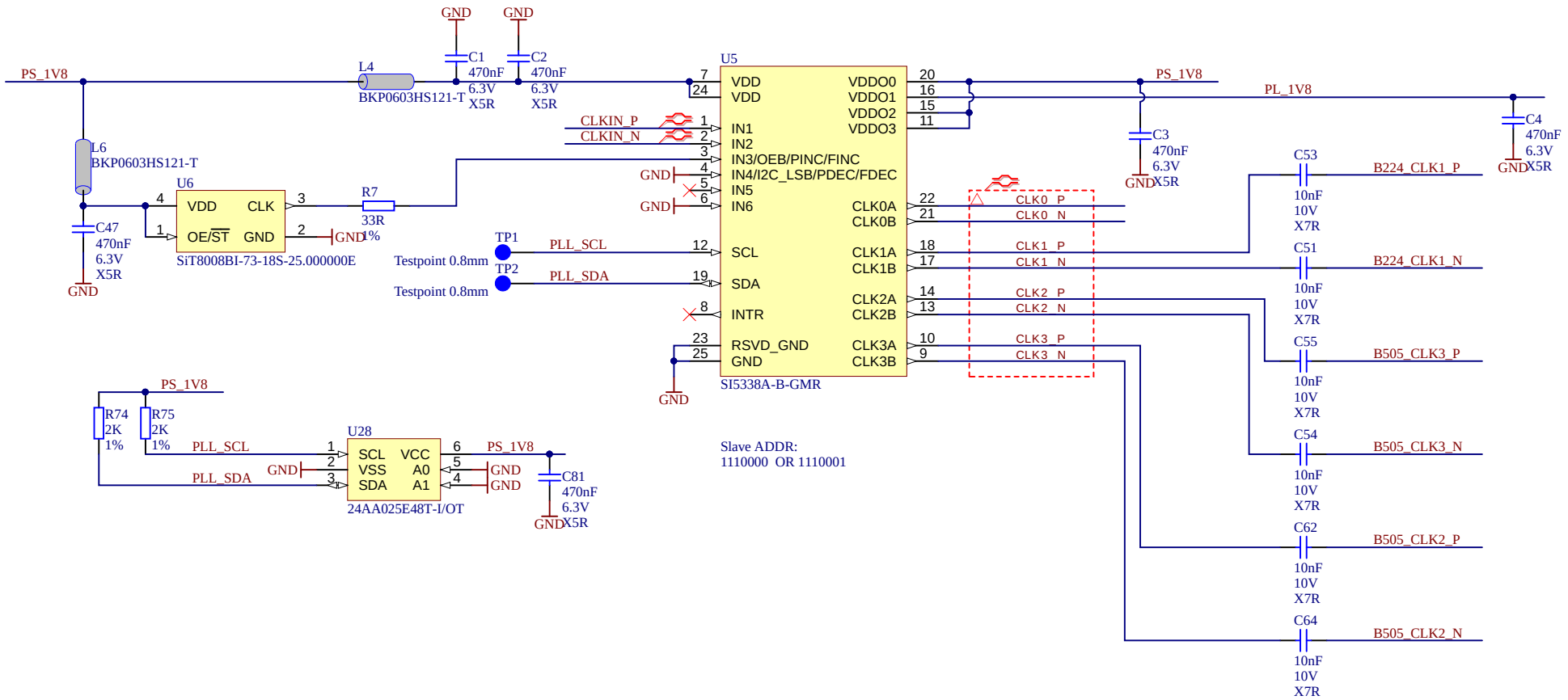

trenz electronic	Title: TE0803 - CLOCK		
A4	Number: TE0803 4AE11-AI		Rev. 03
Date: 2019-02-21	Copyright: Trenz Electronic GmbH / TT		Page22 of 26
Filename: Clock.SchDoc			

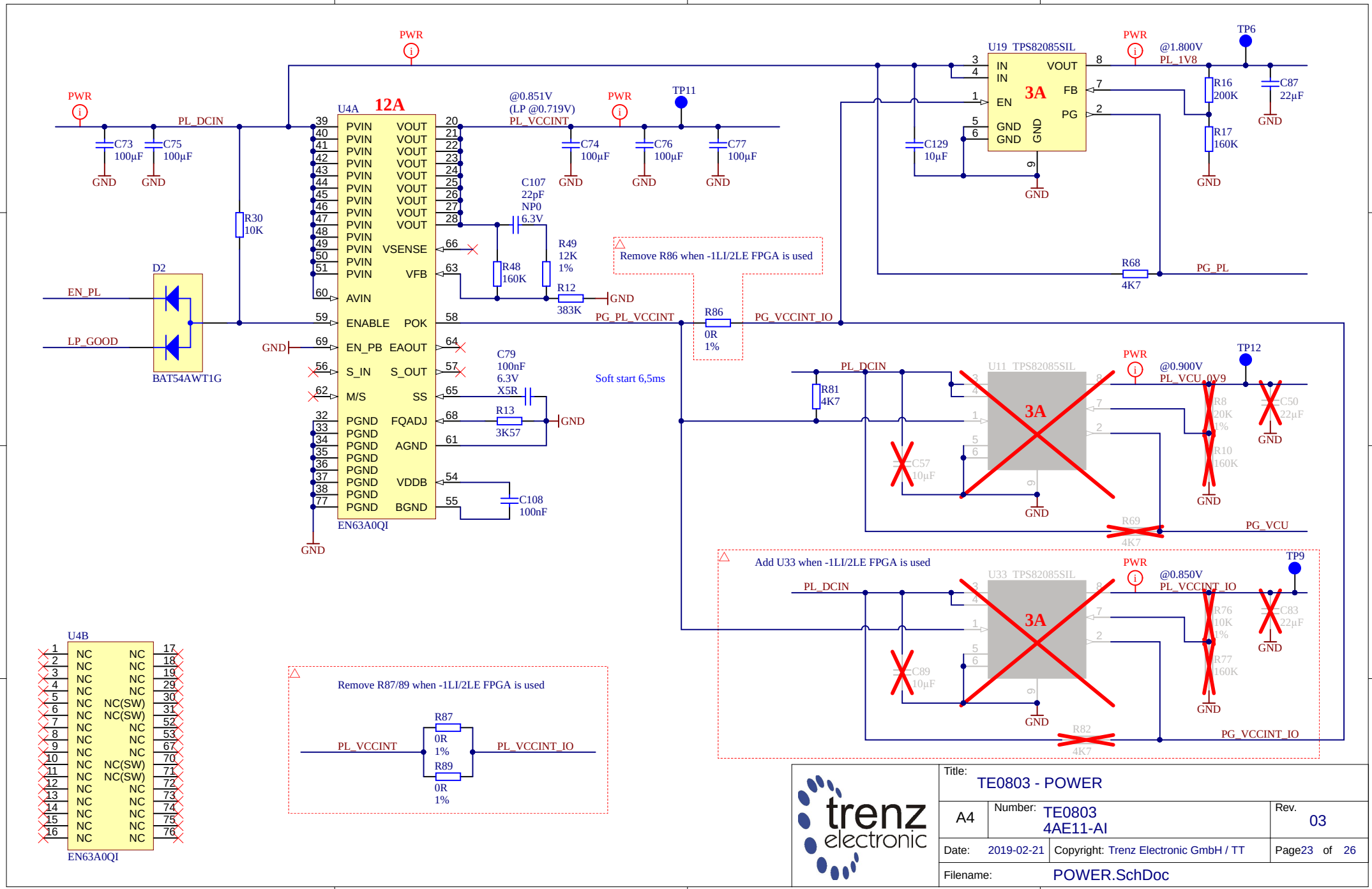

trenz electronic	Title: TE0803 - POWER		
A4	Number: TE0803 4AE11-AI		Rev. 03
Date: 2019-02-21	Copyright: Trenz Electronic GmbH / TT		Page23 of 26
Filename: POWER.SchDoc			

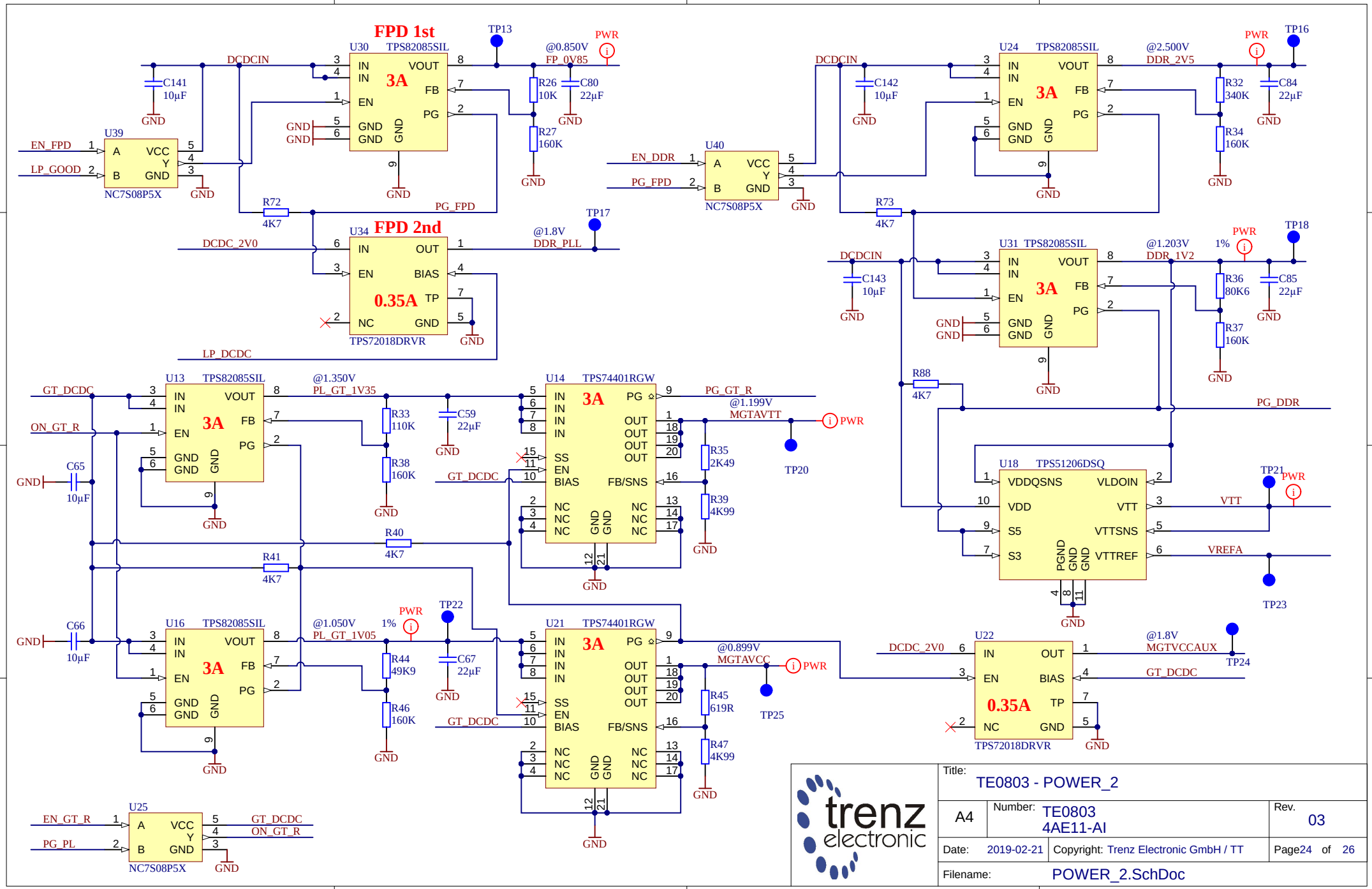

trenz electronic

Title: TE0803 - POWER_2		
A4	Number: TE0803 4AE11-AI	Rev. 03
Date: 2019-02-21	Copyright: Trenz Electronic GmbH / TT	Page24 of 26
Filename: POWER_2.SchDoc		

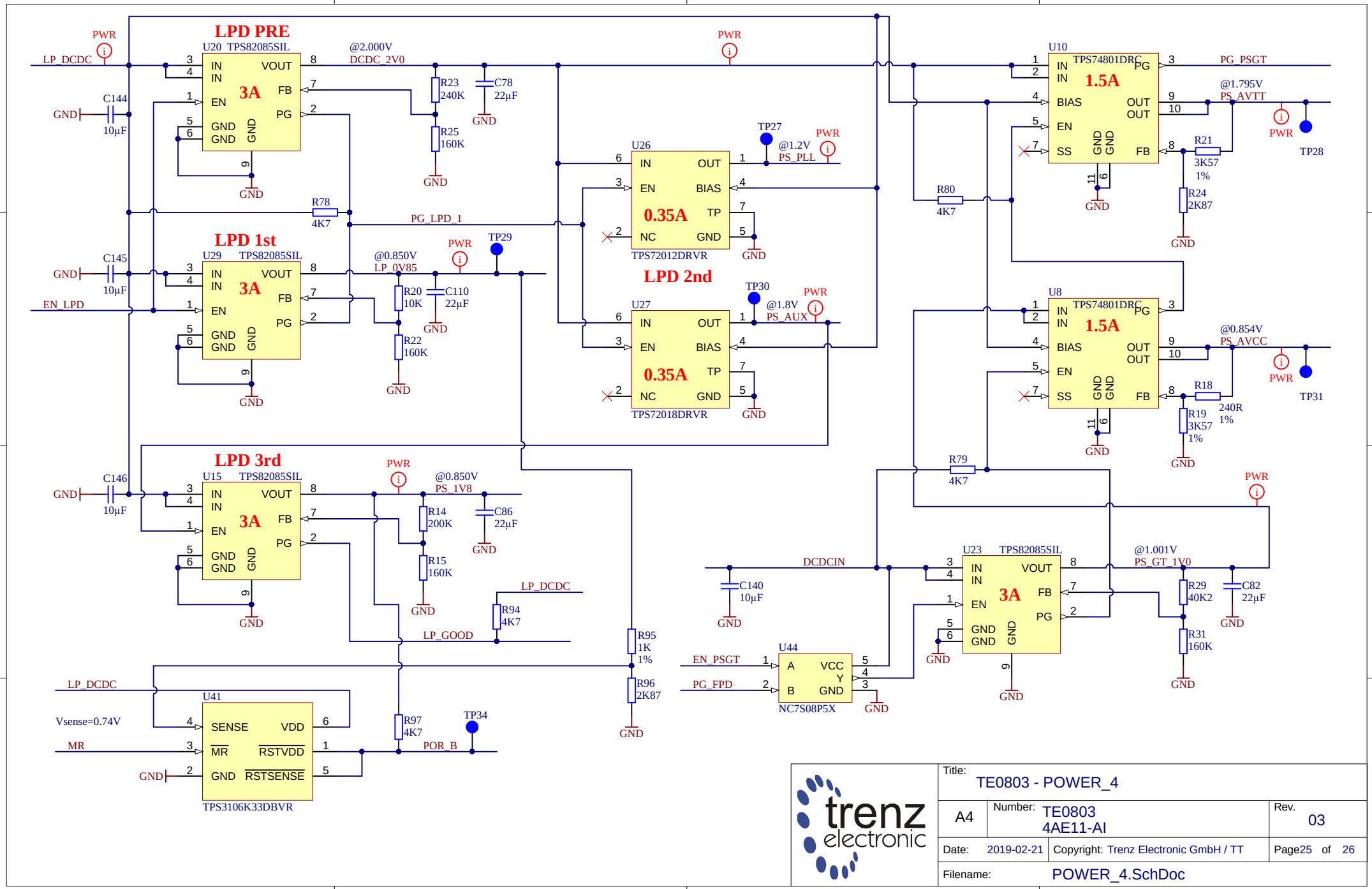

Title: TE0803 - POWER_4		
A4	Number: TE0803 4AE11-AI	Rev. 03
Date: 2019-02-21	Copyright: Trenz Electronic GmbH / TT	Page25 of 26
Filename: POWER_4.SchDoc		

CHANGES REV01a (20.11.2017):
---
1) VCU voltage set to 0.9V, R20 changed to 40K , PL_VCU_1V0 renamed to PL_VCU_0V9.

CHANGES REV02 (20.06.2018):
---
1) Added LDO to DDR_PLL
2) All differential pairs wath length matched with tollerance 0.1mm (excluding package delays)
3) Added MAC EEPROM U28
4) VPS_MGTRAVCC set to 0.85V
5) Added pull-up resistors R68,R69

CHANGES REV03 (21.02.2019):
---
1) Added support of DDP DDR4
2) Added support of Low power FPGA (-L1/L2).
3) Revised testpoints
4) Revised J1-J4 connectors net label style

trenz electronic	Title: TE0803 - Changes list		
A4	Number: TE0803 4AE11-AI		Rev. 03
Date: 2019-02-21	Copyright: Trenz Electronic GmbH		Page26 of 26
Filename: Revision_Changes.SchDoc			