Ethernet
Ethernet.SchDoc

U_USBP
USB-PHY.SchDoc

U_SC_P
SC_POWER.schdoc

U_SFP
SFP.SchDoc

U_USBH
USB3-HUB.SchDoc

U_POWER_OVERVIEW
Power_overview.SchDoc

U_SSD
SSD.SchDoc

U_CLK
Clock.SchDoc

U_POWER_SEQ
PowerUpSequence.SchDoc

U_FrontPanel
FrontPanel.SchDoc

U_I2C
I2C_system.schdoc

U_USB
USB.SchDoc

U_eMMC
eMMC.SchDoc

U_BackPanel
BackPanel.SchDoc

U_DDRP
DDR_PWR.SchDoc

U_FMC PWR
FMC PWR.SchDoc

U_DDR
DDR_SODIMM.SchDoc

U_ZU
ZU.SchDoc

U_CLK2
Clock2.SchDoc

U_SFP_CTRL
SFP_CTRL.SchDoc

U_SC2
SC2.schdoc

U_SC
SC.schdoc

U_MISC
MISC.schdoc

U_UPWR
USB3-HUB_PWR.SchDoc

U_PWR_IN
PWR_IN.SchDoc

U_FAN
FAN_CON.schdoc

U_REVCH
Revision_changes.SchDoc

PM3 PM4 PM1

PM5 PM6 PM2

S/N
Serialnumber

Serial
Serial
Serialnumber 6,3 x 6.3mm

LOGO1
TE Logo PRINT Layer
LOGO PRINT

GND Mount.Hole 3.2mm für Unterlegscheibe

GND Mount.Hole 3.2mm für Unterlegscheibe

GND Mount.Hole 3.2mm für Unterlegscheibe

GND Mount.Hole 3.2mm für Unterlegscheibe

GND Mount.Hole 3.2mm für Unterlegscheibe

GND Mount.Hole 3.2mm für Unterlegscheibe

GND Mount.Hole 3.2mm für Unterlegscheibe

GND Mount.Hole 3.2mm für Unterlegscheibe

GND Mount.Hole 3.2mm für Unterlegscheibe

GND Mount.Hole 3.2mm für Unterlegscheibe

GND Mount.Hole 3.2mm für Unterlegscheibe

GND Mount.Hole 3.2mm für Unterlegscheibe

GND Mount.Hole 3.2mm für Unterlegscheibe

GND Mount.Hole 3.2mm für Unterlegscheibe

GND Mount.Hole 3.2mm für Unterlegscheibe

Assembly variant	9BEX1MA
Created by	MR
Modified by	MR
Modified at	2021-10-12
SVN Revision	9077

trenz electronic

Title: TEB0911		
A4	Number: TEB0911 9BEX1MA	Rev. 04
Date: 18.09.2018	Copyright: Trenz Electronic GmbH	Page1 of 58
Filename: TEB0911.SchDoc		

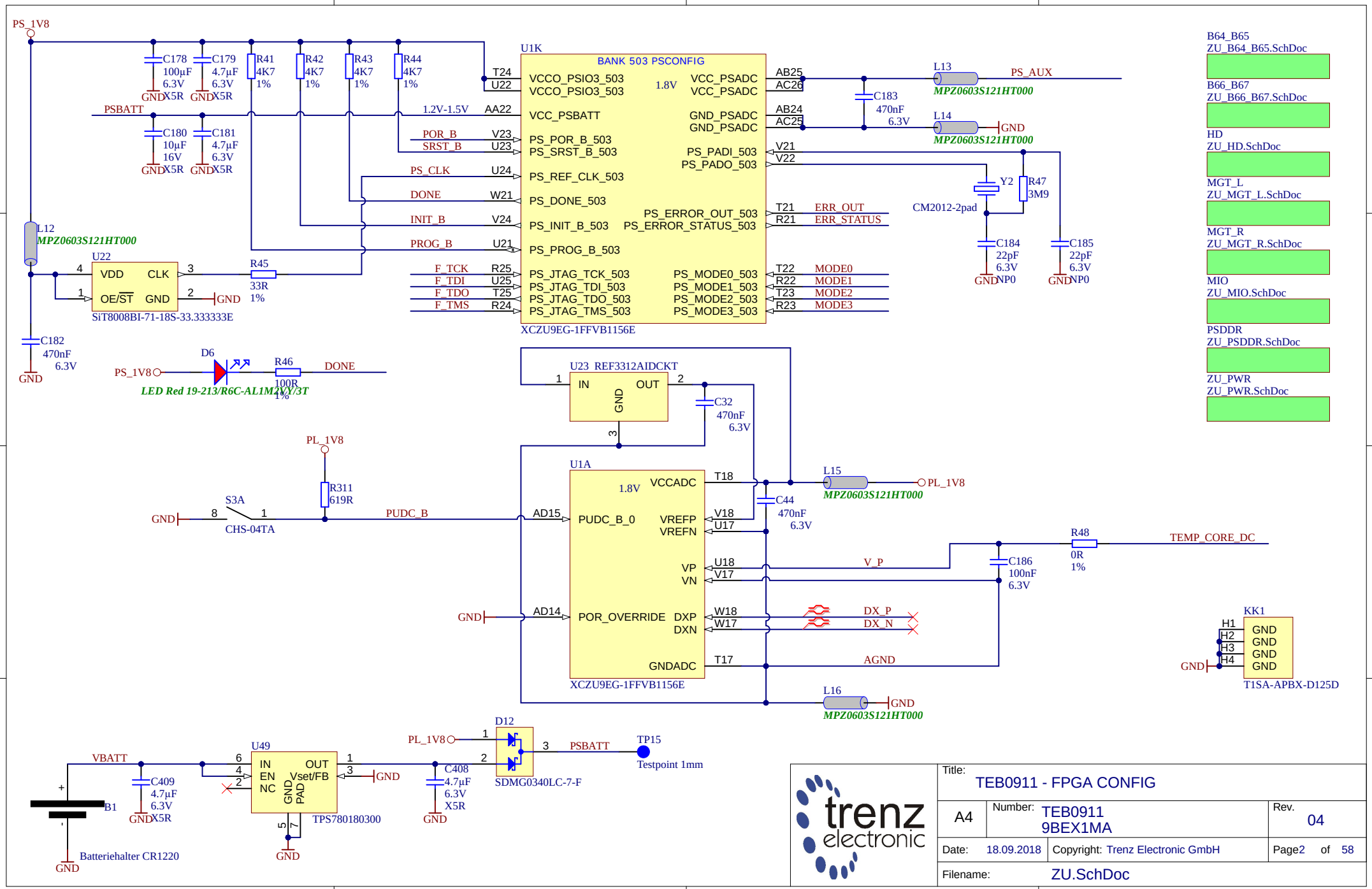

Title: TEB0911 - FPGA CONFIG

A4	Number: TEB0911 9BEX1MA	Rev. 04
Date: 18.09.2018	Copyright: Trenz Electronic GmbH	Page2 of 58
Filename: ZU.SchDoc		

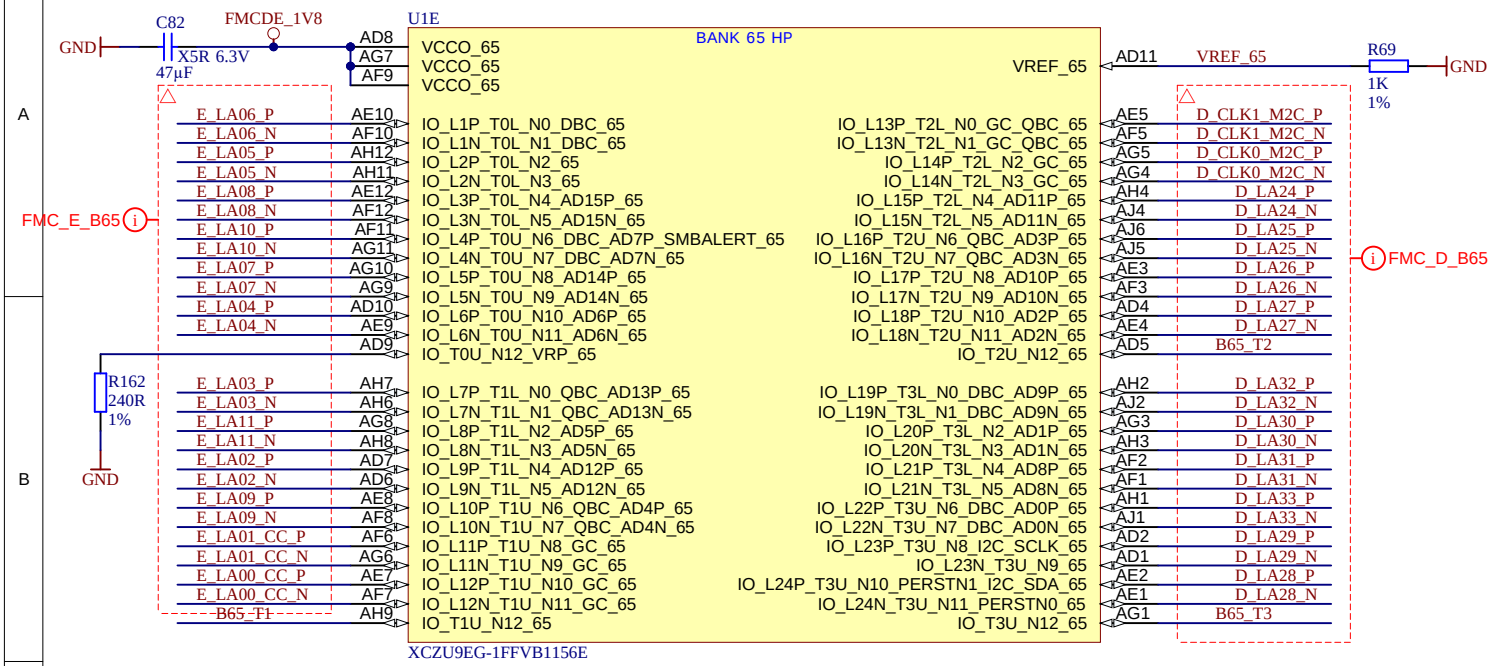

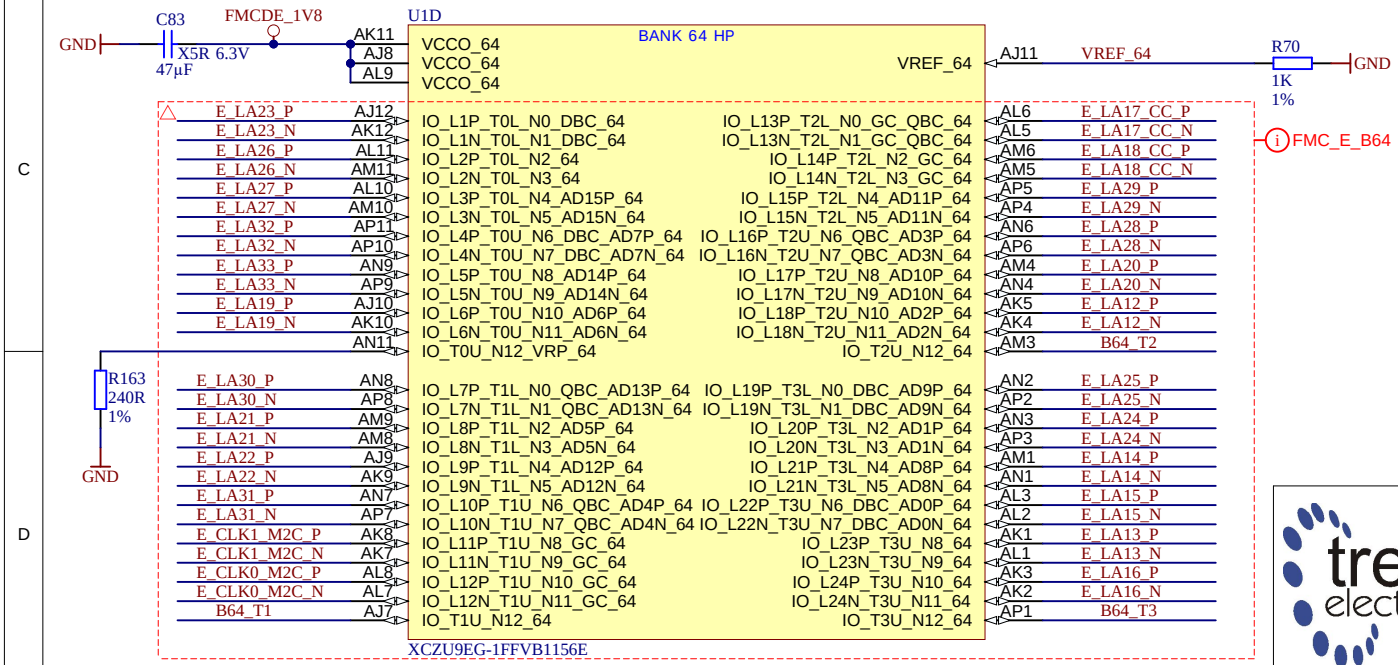

trenz electronic	Title: TEB0911 - FPGA B64 B65		
A4	Number: TEB0911 9BEX1MA		Rev. 04
Date: 18.09.2018	Copyright: Trenz Electronic GmbH		Page3 of 58
Filename: ZU_B64_B65.SchDoc			

trenz electronic	Title: TEB0911 - FPGA B66 B67		
A4	Number: TEB0911 9BEX1MA		Rev. 04
Date: 18.09.2018	Copyright: Trenz Electronic GmbH		Page4 of 58
Filename: ZU_B66_B67.SchDoc			

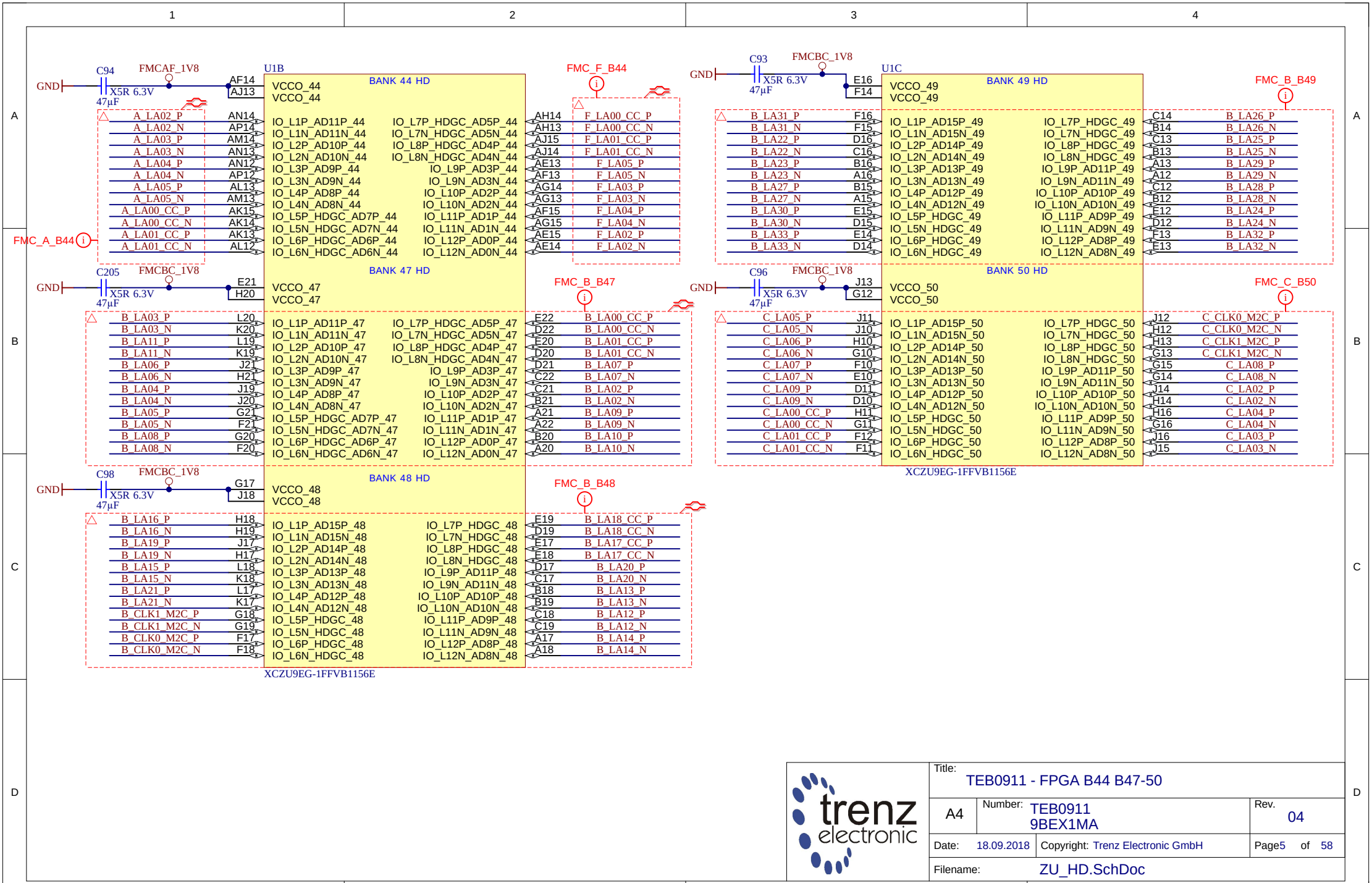
U1B
BANK 44 HD
VCCO_44
VCCO_44
C94
FMCAF_1V8
GND
X5R 6.3V
47µF
AF14
AJ13
FMC_A_B44
A_LA02_P AN14 IO_L1P_AD11P_44 IO_L7P_HDGC_AD5P_44
A_LA02_N AP14 IO_L1N_AD11N_44 IO_L7N_HDGC_AD5N_44
A_LA03_P AM14 IO_L2P_AD10P_44 IO_L8P_HDGC_AD4P_44
A_LA03_N AN13 IO_L2N_AD10N_44 IO_L8N_HDGC_AD4N_44
A_LA04_P AN12 IO_L3P_AD9P_44 IO_L9P_AD3P_44
A_LA04_N AP12 IO_L3N_AD9N_44 IO_L9N_AD3N_44
A_LA05_P AL13 IO_L4P_AD8P_44 IO_L10P_AD2P_44
A_LA05_N AM13 IO_L4N_AD8N_44 IO_L10N_AD2N_44
A_LA00_CC_P AK15 IO_L5P_HDGC_AD7P_44 IO_L11P_AD1P_44
A_LA00_CC_N AK14 IO_L5N_HDGC_AD7N_44 IO_L11N_AD1N_44
A_LA01_CC_P AK13 IO_L6P_HDGC_AD6P_44 IO_L12P_AD0P_44
A_LA01_CC_N AL12 IO_L6N_HDGC_AD6N_44 IO_L12N_AD0N_44
FMC_F_B44
AH14 F_LA00_CC_P
AH13 F_LA00_CC_N
AJ15 F_LA01_CC_P
AJ14 F_LA01_CC_N
AE13 F_LA05_P
AF13 F_LA05_N
AG14 F_LA03_P
AG13 F_LA03_N
AF15 F_LA04_P
AG15 F_LA04_N
AE15 F_LA02_P
AE14 F_LA02_N
BANK 47 HD
C205
FMCBC_1V8
GND
X5R 6.3V
47µF
E21
H20
VCCO_47
VCCO_47
B_LA03_P L20 IO_L1P_AD11P_47 IO_L7P_HDGC_AD5P_47
B_LA03_N K20 IO_L1N_AD11N_47 IO_L7N_HDGC_AD5N_47
B_LA11_P L19 IO_L2P_AD10P_47 IO_L8P_HDGC_AD4P_47
B_LA11_N K19 IO_L2N_AD10N_47 IO_L8N_HDGC_AD4N_47
B_LA06_P J21 IO_L3P_AD9P_47 IO_L9P_AD3P_47
B_LA06_N H21 IO_L3N_AD9N_47 IO_L9N_AD3N_47
B_LA04_P J19 IO_L4P_AD8P_47 IO_L10P_AD2P_47
B_LA04_N J20 IO_L4N_AD8N_47 IO_L10N_AD2N_47
B_LA05_P G21 IO_L5P_HDGC_AD7P_47 IO_L11P_AD1P_47
B_LA05_N F21 IO_L5N_HDGC_AD7N_47 IO_L11N_AD1N_47
B_LA08_P G20 IO_L6P_HDGC_AD6P_47 IO_L12P_AD0P_47
B_LA08_N F20 IO_L6N_HDGC_AD6N_47 IO_L12N_AD0N_47
FMC_B_B47
E22 B_LA00_CC_P
D22 B_LA00_CC_N
E20 B_LA01_CC_P
D20 B_LA01_CC_N
D21 B_LA07_P
C22 B_LA07_N
C21 B_LA02_P
B21 B_LA02_N
A21 B_LA09_P
A22 B_LA09_N
B20 B_LA10_P
A20 B_LA10_N
BANK 48 HD
C98
FMCBC_1V8
GND
X5R 6.3V
47µF
G17
J18
VCCO_48
VCCO_48
B_LA16_P H18 IO_L1P_AD15P_48 IO_L7P_HDGC_48
B_LA16_N H19 IO_L1N_AD15N_48 IO_L7N_HDGC_48
B_LA19_P J17 IO_L2P_AD14P_48 IO_L8P_HDGC_48
B_LA19_N H17 IO_L2N_AD14N_48 IO_L8N_HDGC_48
B_LA15_P L18 IO_L3P_AD13P_48 IO_L9P_AD11P_48
B_LA15_N K18 IO_L3N_AD13N_48 IO_L9N_AD11N_48
B_LA21_P L17 IO_L4P_AD12P_48 IO_L10P_AD10P_48
B_LA21_N K17 IO_L4N_AD12N_48 IO_L10N_AD10N_48
B_CLK1_M2C_P G18 IO_L5P_HDGC_48 IO_L11P_AD9P_48
B_CLK1_M2C_N G19 IO_L5N_HDGC_48 IO_L11N_AD9N_48
B_CLK0_M2C_P F17 IO_L6P_HDGC_48 IO_L12P_AD8P_48
B_CLK0_M2C_N F18 IO_L6N_HDGC_48 IO_L12N_AD8N_48
FMC_B_B48
E19 B_LA18_CC_P
D19 B_LA18_CC_N
E17 B_LA17_CC_P
E18 B_LA17_CC_N
D17 B_LA20_P
C17 B_LA20_N
B18 B_LA13_P
B19 B_LA13_N
C18 B_LA12_P
C19 B_LA12_N
A17 B_LA14_P
A18 B_LA14_N
XCZU9EG-1FFVB1156E
U1C
BANK 49 HD
VCCO_49
VCCO_49
C93
FMCBC_1V8
GND
X5R 6.3V
47µF
E16
F14
B_LA31_P F16 IO_L1P_AD15P_49 IO_L7P_HDGC_49
B_LA31_N F15 IO_L1N_AD15N_49 IO_L7N_HDGC_49
B_LA22_P D16 IO_L2P_AD14P_49 IO_L8P_HDGC_49
B_LA22_N C16 IO_L2N_AD14N_49 IO_L8N_HDGC_49
B_LA23_P B16 IO_L3P_AD13P_49 IO_L9P_AD11P_49
B_LA23_N A16 IO_L3N_AD13N_49 IO_L9N_AD11N_49
B_LA27_P B15 IO_L4P_AD12P_49 IO_L10P_AD10P_49
B_LA27_N A15 IO_L4N_AD12N_49 IO_L10N_AD10N_49
B_LA30_P E15 IO_L5P_HDGC_49 IO_L11P_AD9P_49
B_LA30_N D15 IO_L5N_HDGC_49 IO_L11N_AD9N_49
B_LA33_P E14 IO_L6P_HDGC_49 IO_L12P_AD8P_49
B_LA33_N D14 IO_L6N_HDGC_49 IO_L12N_AD8N_49
FMC_B_B49
C14 B_LA26_P
B14 B_LA26_N
C13 B_LA25_P
B13 B_LA25_N
A13 B_LA29_P
A12 B_LA29_N
C12 B_LA28_P
B12 B_LA28_N
E12 B_LA24_P
D12 B_LA24_N
F13 B_LA32_P
E13 B_LA32_N
BANK 50 HD
C96
FMCBC_1V8
GND
X5R 6.3V
47µF
J13
G12
VCCO_50
VCCO_50
C_LA05_P J11 IO_L1P_AD15P_50 IO_L7P_HDGC_50
C_LA05_N J10 IO_L1N_AD15N_50 IO_L7N_HDGC_50
C_LA06_P H10 IO_L2P_AD14P_50 IO_L8P_HDGC_50
C_LA06_N G10 IO_L2N_AD14N_50 IO_L8N_HDGC_50
C_LA07_P F10 IO_L3P_AD13P_50 IO_L9P_AD11P_50
C_LA07_N E10 IO_L3N_AD13N_50 IO_L9N_AD11N_50
C_LA09_P D11 IO_L4P_AD12P_50 IO_L10P_AD10P_50
C_LA09_N D10 IO_L4N_AD12N_50 IO_L10N_AD10N_50
C_LA00_CC_P H11 IO_L5P_HDGC_50 IO_L11P_AD9P_50
C_LA00_CC_N G11 IO_L5N_HDGC_50 IO_L11N_AD9N_50
C_LA01_CC_P F12 IO_L6P_HDGC_50 IO_L12P_AD8P_50
C_LA01_CC_N F11 IO_L6N_HDGC_50 IO_L12N_AD8N_50
FMC_C_B50
J12 C_CLK0_M2C_P
H12 C_CLK0_M2C_N
H13 C_CLK1_M2C_P
G13 C_CLK1_M2C_N
G15 C_LA08_P
G14 C_LA08_N
J14 C_LA02_P
H14 C_LA02_N
H16 C_LA04_P
G16 C_LA04_N
J16 C_LA03_P
J15 C_LA03_N
XCZU9EG-1FFVB1156E
trenz electronic
Title: TEB0911 - FPGA B44 B47-50
A4
Number: TEB0911 9BEX1MA
Rev. 04
Date: 18.09.2018
Copyright: Trenz Electronic GmbH
Page5 of 58
Filename: ZU_HD.SchDoc

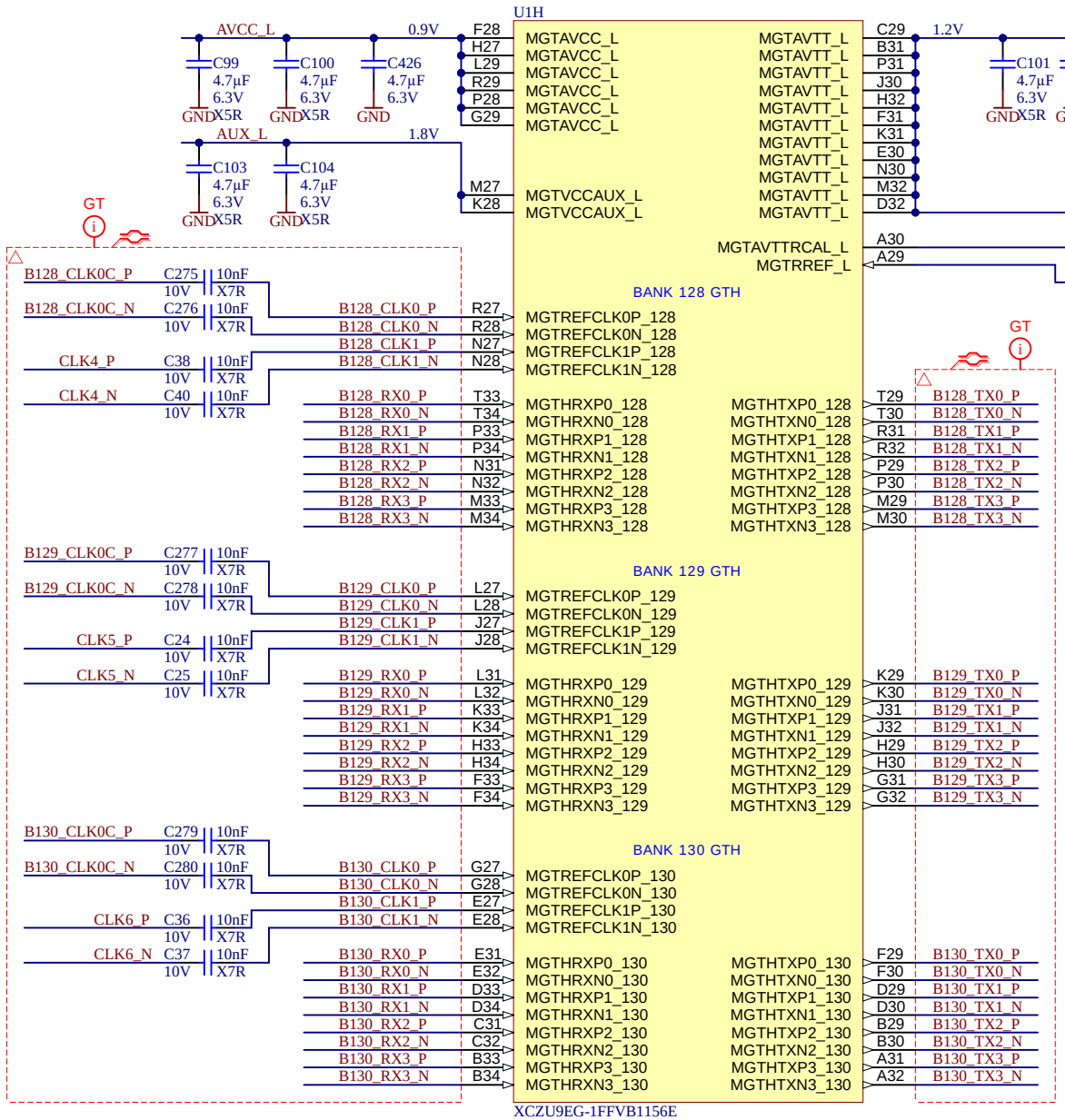

trenz electronic	Title: TEB0911 - FPGA B128-130		
A4	Number: TEB0911 9BEX1MA		Rev. 04
Date: 18.09.2018	Copyright: Trenz Electronic GmbH		Page6 of 58
Filename: ZU_MGT_L.SchDoc			

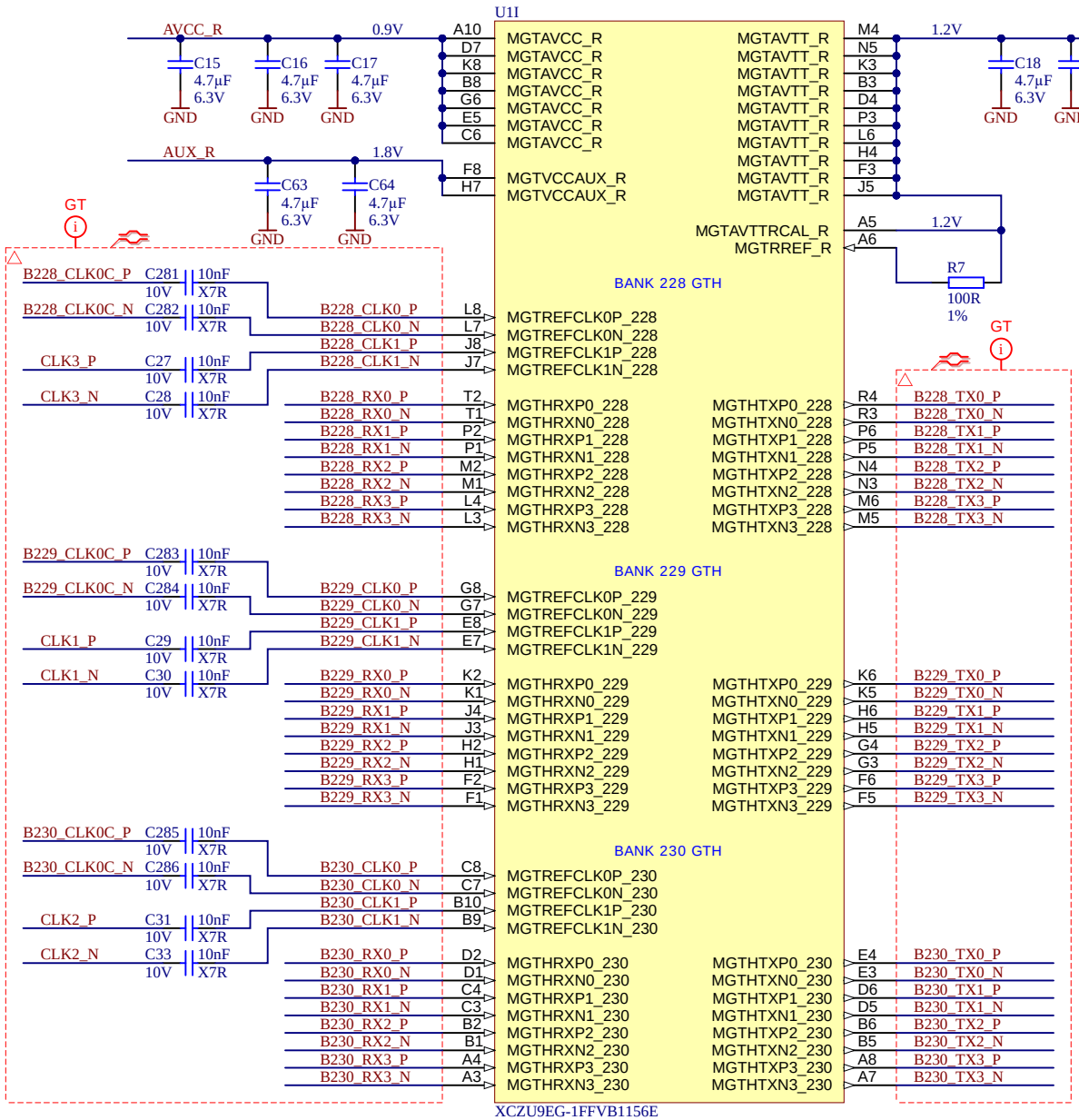

trenz electronic	Title: TEB0911 - FPGA B228-230		
A4	Number: TEB0911 9BEX1MA		Rev. 04
Date: 18.09.2018	Copyright: Trenz Electronic GmbH		Page7 of 58
Filename: ZU_MGT_R.SchDoc			

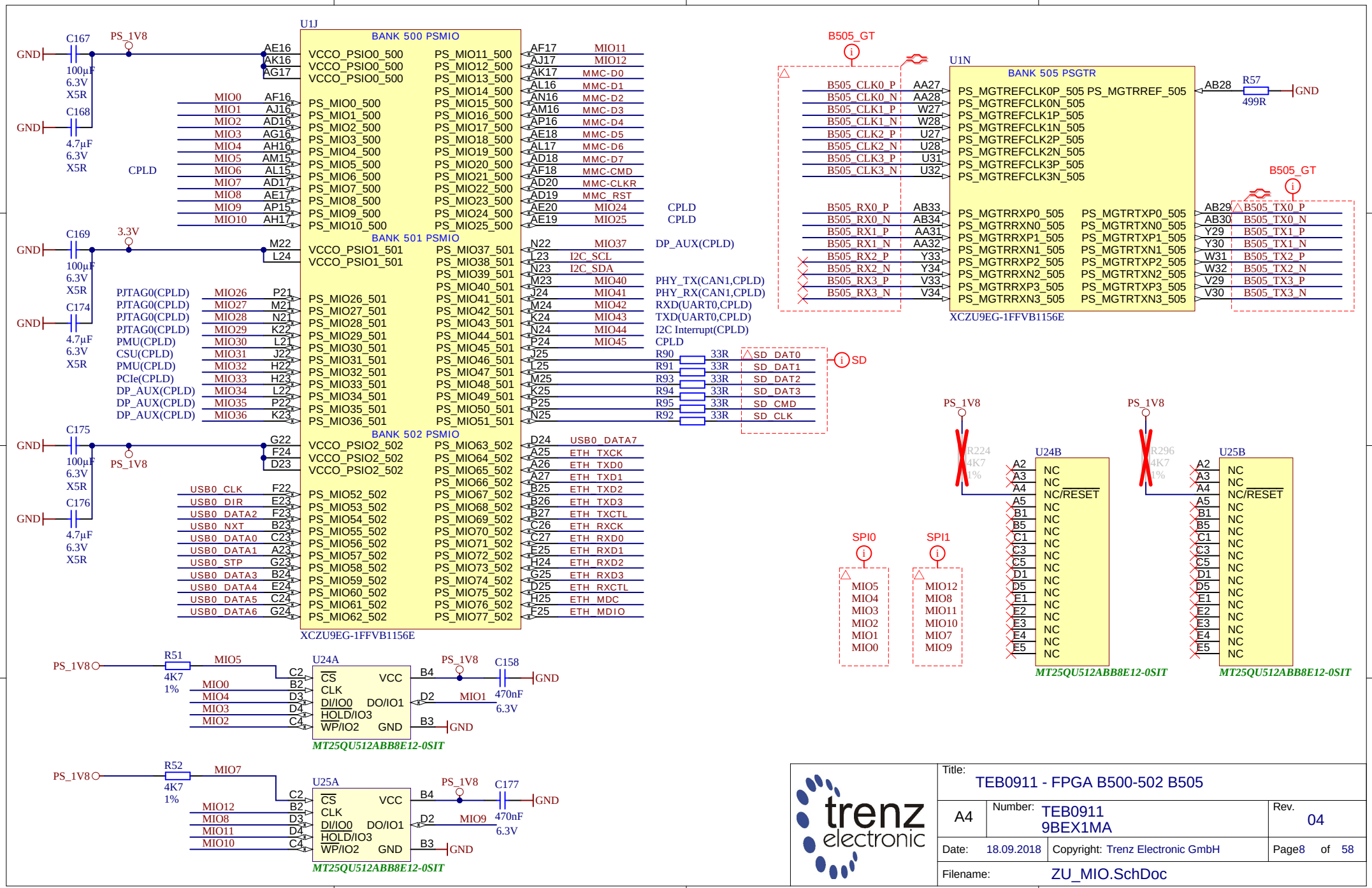
U1J
BANK 500 PSMIO
BANK 501 PSMIO
BANK 502 PSMIO
XCZU9EG-1FFVB1156E
U1N
BANK 505 PSGTR
XCZU9EG-1FFVB1156E
B505_GT
PS_1V8
3.3V
GND
C167
C168
C169
C174
C175
C176
100µF 6.3V X5R
4.7µF 6.3V X5R
CPLD
PJTAG0(CPLD)
PMU(CPLD)
CSU(CPLD)
PCIe(CPLD)
DP_AUX(CPLD)
PHY_TX(CAN1,CPLD)
PHY_RX(CAN1,CPLD)
RXD(UART0,CPLD)
TXD(UART0,CPLD)
I2C Interrupt(CPLD)
SD
R90 R91 R93 R94 R95 R92
33R
SD_DAT0
SD_DAT1
SD_DAT2
SD_DAT3
SD_CMD
SD_CLK
R57
499R
AB28
R224
R296
4K7
1%
U24B
U25B
NC/RESET
MT25QU512ABB8E12-0SIT
SPI0
SPI1
R51
R52
U24A
U25A
CS
CLK
DI/IO0
DO/IO1
HOLD/IO3
WP/IO2
VCC
GND
C158
C177
470nF 6.3V
trenz electronic
Title:
TEB0911 - FPGA B500-502 B505
A4
Number:
TEB0911
9BEX1MA
Rev.
04
Date:
18.09.2018
Copyright: Trenz Electronic GmbH
Page8 of 58
Filename:
ZU_MIO.SchDoc

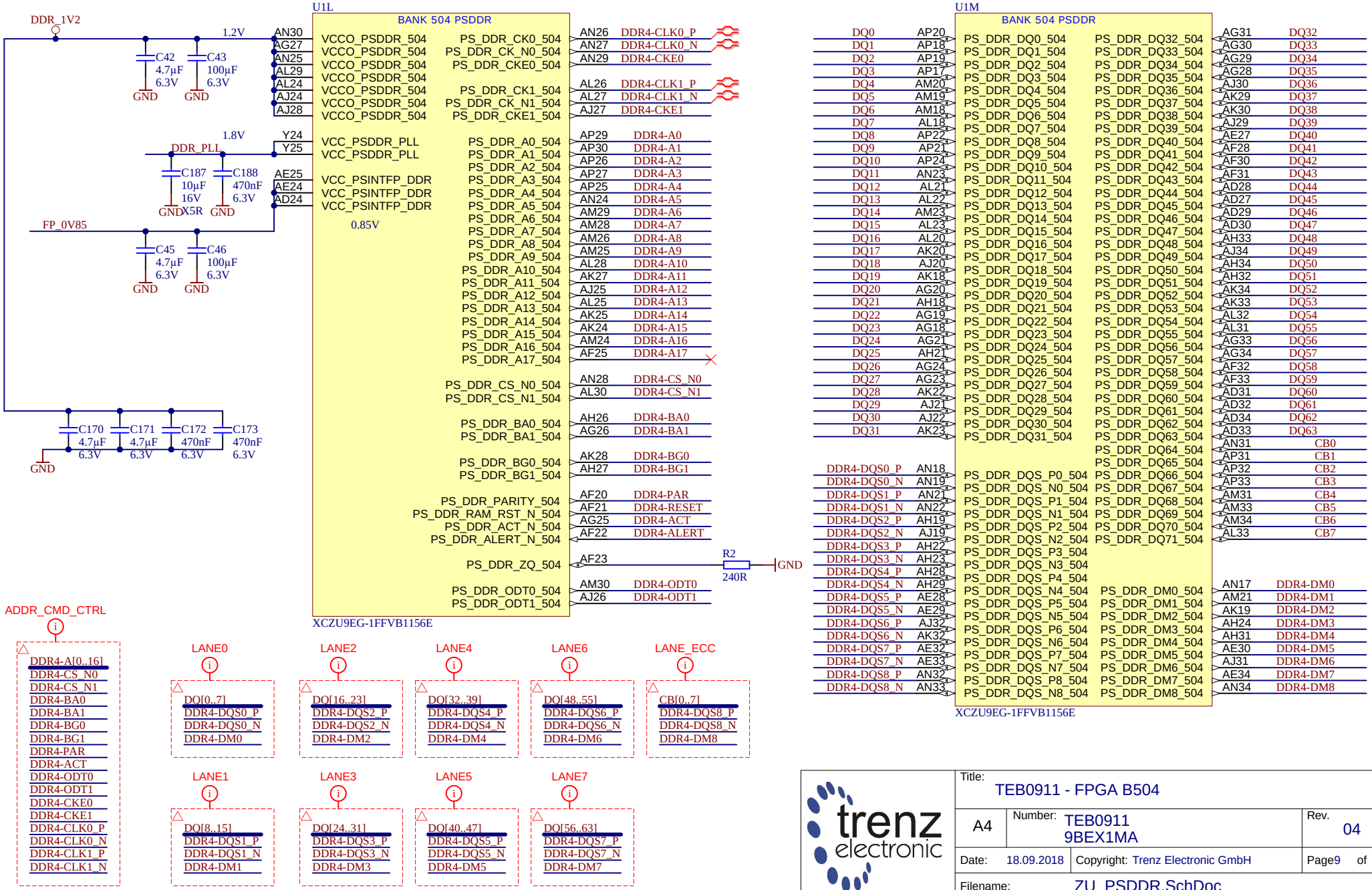

Title: TEB0911 - FPGA B504

A4	Number: TEB0911 9BEX1MA	Rev. 04
Date: 18.09.2018	Copyright: Trenz Electronic GmbH	Page9 of 58
Filename: ZU_PSDDR.SchDoc		

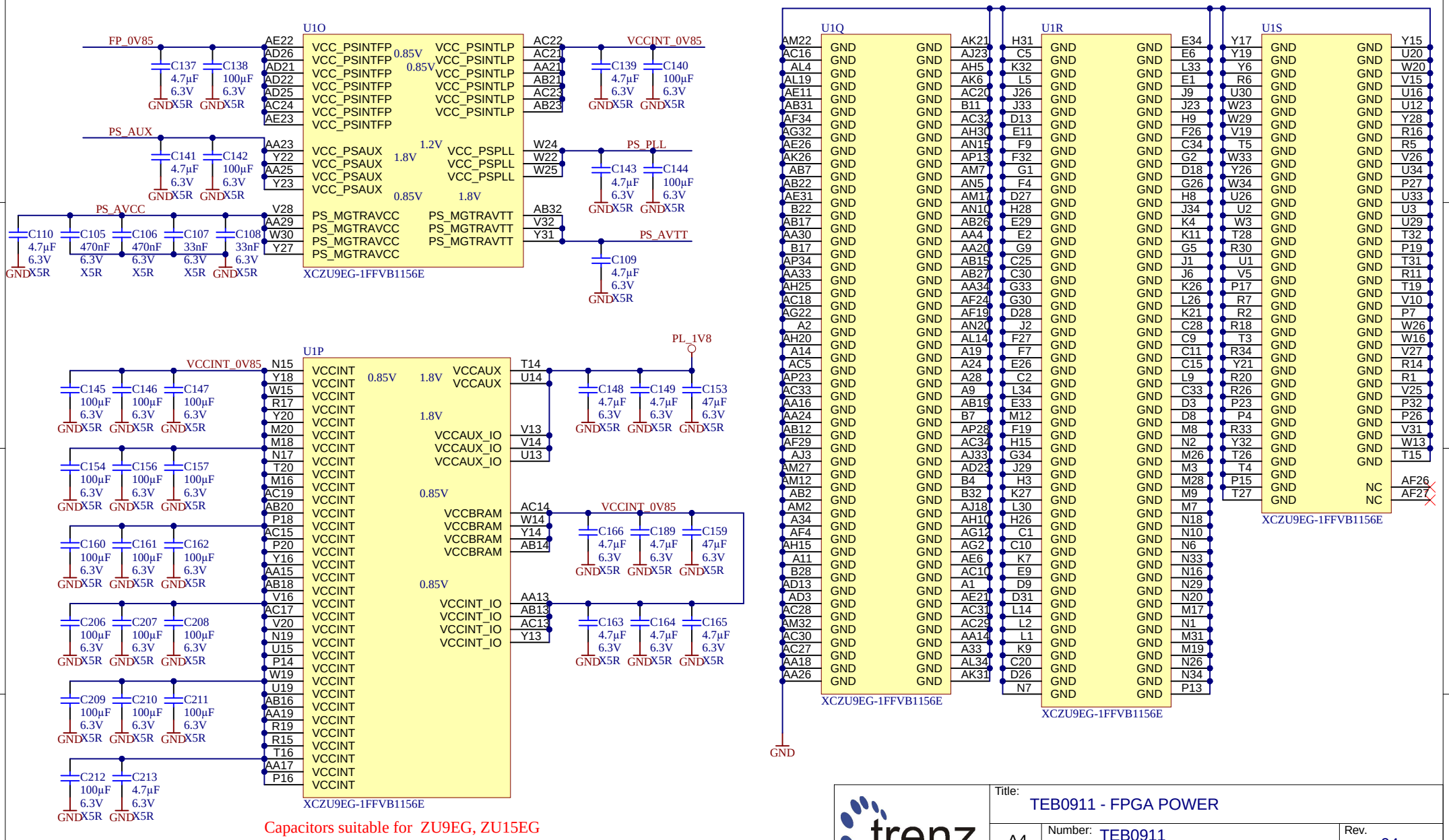

Capacitors suitable for ZU9EG, ZU15EG

trenz electronic	Title: TEB0911 - FPGA POWER		
A4	Number: TEB0911 9BEX1MA		Rev. 04
Date: 18.09.2018	Copyright: Trenz Electronic GmbH		Page10 of 58
Filename: ZU_PWR.SchDoc			

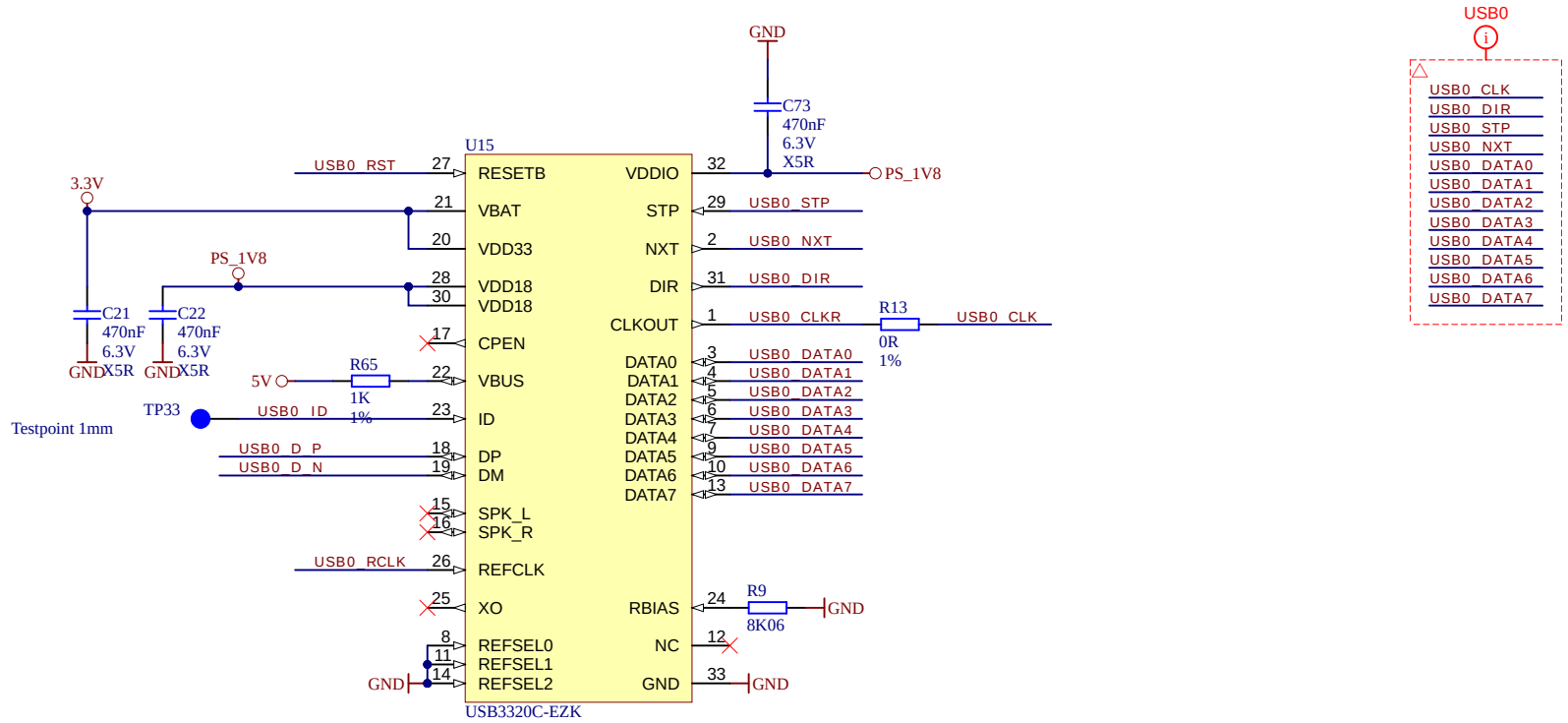

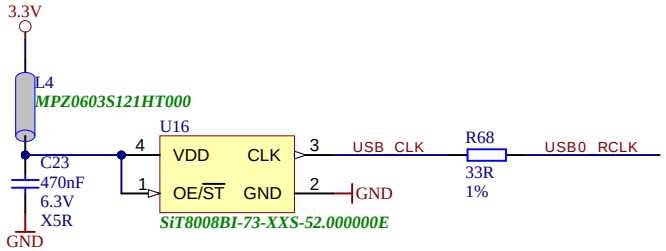

trenz electronic	Title: TEB0911 - USB 2.0 PHY		
A4	Number: TEB0911 9BEX1MA		Rev. 04
Date: 18.09.2018	Copyright: Trenz Electronic GmbH		Page11 of 58
Filename: USB-PHY.SchDoc			

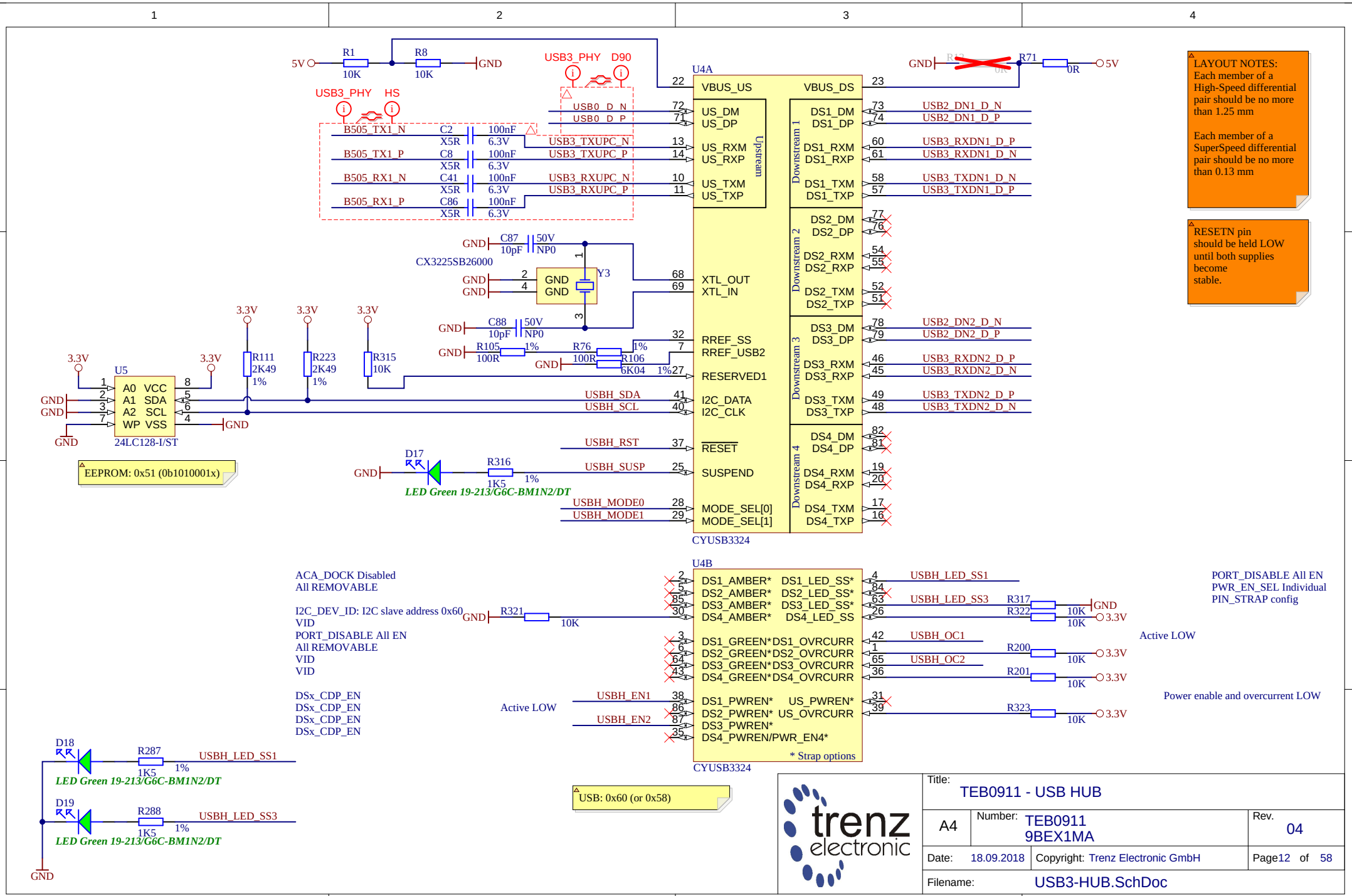
U4A
CYUSB3324
VBUS_US
VBUS_DS
US_DM
US_DP
US_RXM
US_RXP
US_TXM
US_TXP
Upstream
Downstream 1
Downstream 2
Downstream 3
Downstream 4
DS1_DM
DS1_DP
DS1_RXM
DS1_RXP
DS1_TXM
DS1_TXP
DS2_DM
DS2_DP
DS2_RXM
DS2_RXP
DS2_TXM
DS2_TXP
DS3_DM
DS3_DP
DS3_RXM
DS3_RXP
DS3_TXM
DS3_TXP
DS4_DM
DS4_DP
DS4_RXM
DS4_RXP
DS4_TXM
DS4_TXP
XTL_OUT
XTL_IN
RREF_SS
RREF_USB2
RESERVED1
I2C_DATA
I2C_CLK
RESET
SUSPEND
MODE_SEL[0]
MODE_SEL[1]
USB2_DN1_D_N
USB2_DN1_D_P
USB3_RXDN1_D_P
USB3_RXDN1_D_N
USB3_TXDN1_D_N
USB3_TXDN1_D_P
USB2_DN2_D_N
USB2_DN2_D_P
USB3_RXDN2_D_P
USB3_RXDN2_D_N
USB3_TXDN2_D_P
USB3_TXDN2_D_N
USBH_SDA
USBH_SCL
USBH_RST
USBH_SUSP
USBH_MODE0
USBH_MODE1
USB0_D_N
USB0_D_P
USB3_TXUPC_N
USB3_TXUPC_P
USB3_RXUPC_N
USB3_RXUPC_P
B505_TX1_N
B505_TX1_P
B505_RX1_N
B505_RX1_P
USB3_PHY
HS
D90
R1
10K
R8
10K
R71
0R
5V
GND
C87
10pF
50V
NP0
C88
10pF
50V
NP0
CX3225SB26000
Y3
R105
100R
R76
100R
R106
6K04
R111
2K49
R223
2K49
R315
10K
3.3V
U5
A0 VCC
A1 SDA
A2 SCL
WP VSS
24LC128-I/ST
EEPROM: 0x51 (0b1010001x)
D17
R316
1K5
LED Green 19-213/G6C-BM1N2/DT
LAYOUT NOTES:
Each member of a High-Speed differential pair should be no more than 1.25 mm
Each member of a SuperSpeed differential pair should be no more than 0.13 mm
RESETN pin should be held LOW until both supplies become stable.
U4B
ACA_DOCK Disabled
All REMOVABLE
I2C_DEV_ID: I2C slave address 0x60
VID
PORT_DISABLE All EN
All REMOVABLE
VID
VID
DSx_CDP_EN
DSx_CDP_EN
DSx_CDP_EN
DSx_CDP_EN
DS1_AMBER*
DS2_AMBER*
DS3_AMBER*
DS4_AMBER*
DS1_LED_SS*
DS2_LED_SS*
DS3_LED_SS*
DS4_LED_SS
DS1_GREEN*
DS2_GREEN*
DS3_GREEN*
DS4_GREEN*
DS1_OVRCURR
DS2_OVRCURR
DS3_OVRCURR
DS4_OVRCURR
DS1_PWREN*
DS2_PWREN*
DS3_PWREN*
DS4_PWREN/PWR_EN4*
US_PWREN*
US_OVRCURR
USBH_EN1
USBH_EN2
Active LOW
USBH_LED_SS1
USBH_LED_SS3
USBH_OC1
USBH_OC2
R321
R317
R322
R200
R201
R323
PORT_DISABLE All EN
PWR_EN_SEL Individual
PIN_STRAP config
Active LOW
Power enable and overcurrent LOW
* Strap options
D18
R287
D19
R288
USB: 0x60 (or 0x58)
trenz electronic
Title:
TEB0911 - USB HUB
A4
Number:
TEB0911
9BEX1MA
Rev.
04
Date:
18.09.2018
Copyright: Trenz Electronic GmbH
Page12 of 58
Filename:
USB3-HUB.SchDoc

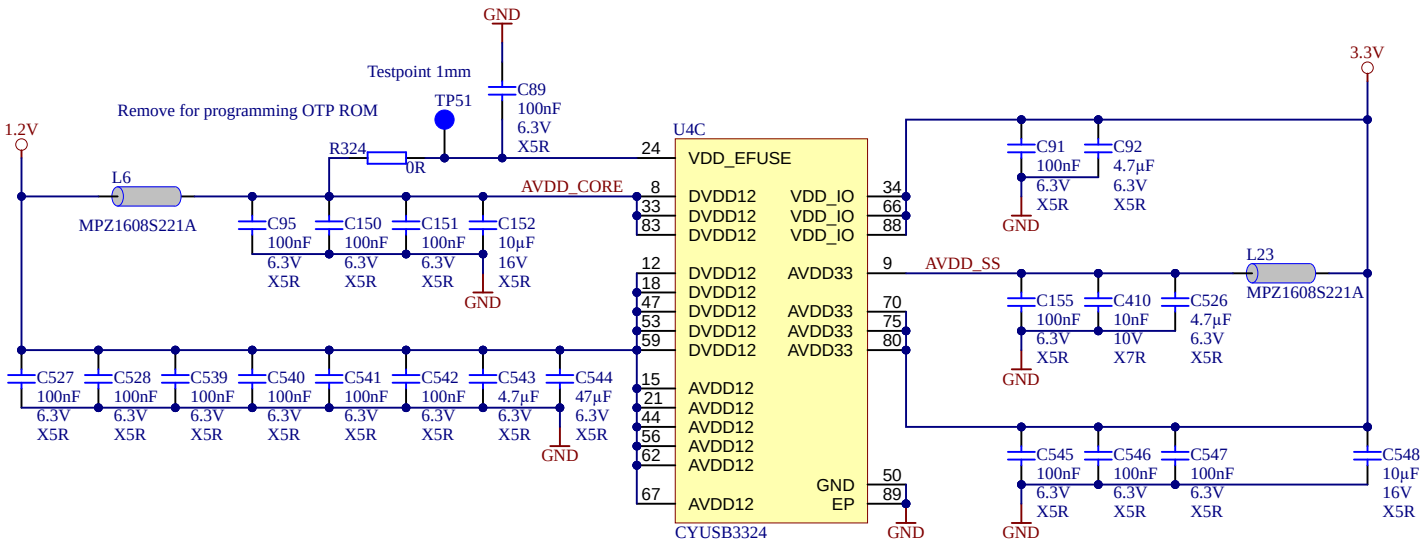

trenz electronic	Title: TEB0911 - USB HUB		
A4	Number: TEB0911 9BEX1MA		Rev. 04
Date: 18.09.2018	Copyright: Trenz Electronic GmbH		Page13 of 58
Filename: USB3-HUB_PWR.SchDoc			

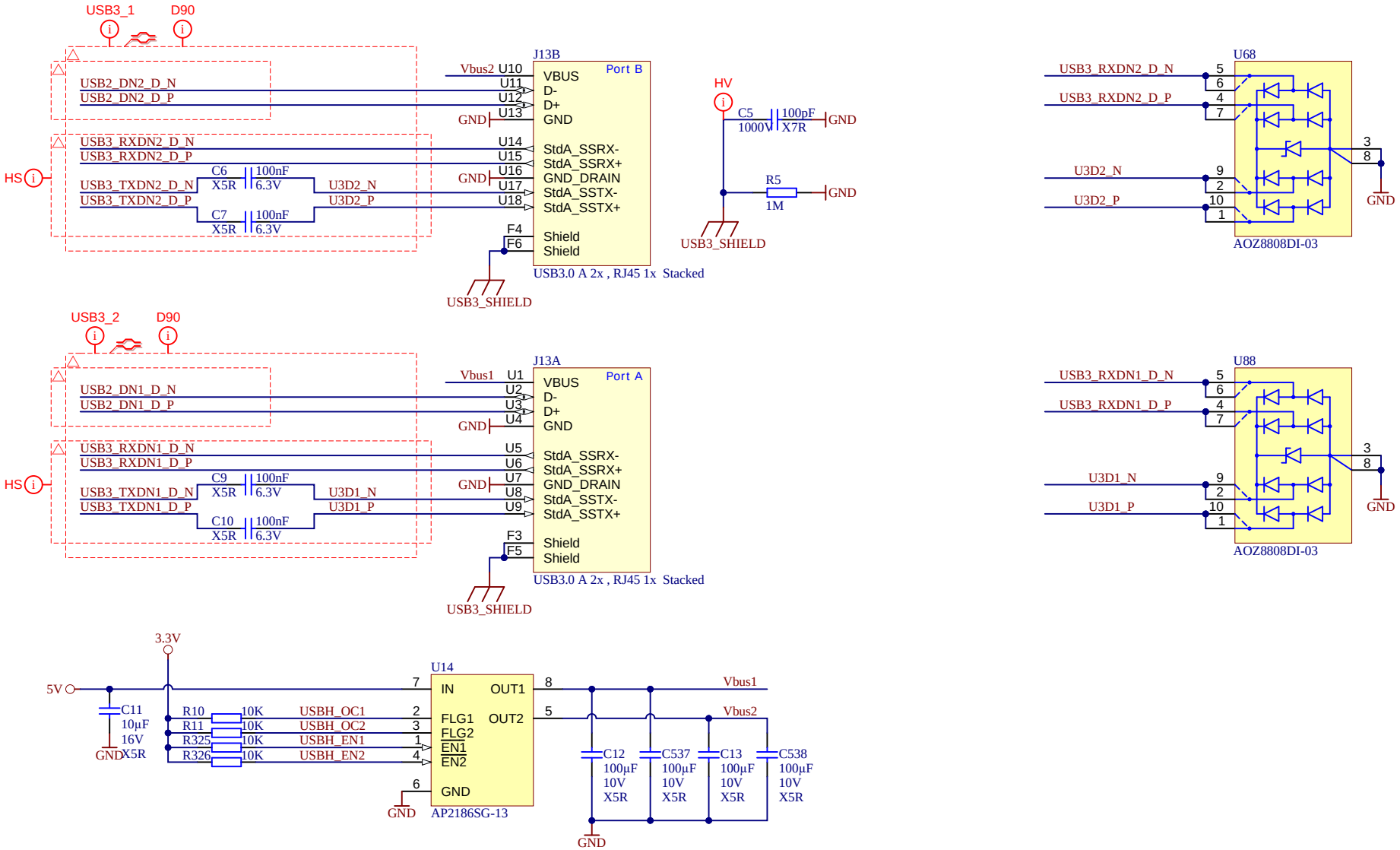

trenz electronic	Title: TEB0911 - USB CONNECTORS		
A4	Number: TEB0911 9BEX1MA		Rev. 04
Date: 18.09.2018	Copyright: Trenz Electronic GmbH		Page14 of 58
Filename: USB.SchDoc			

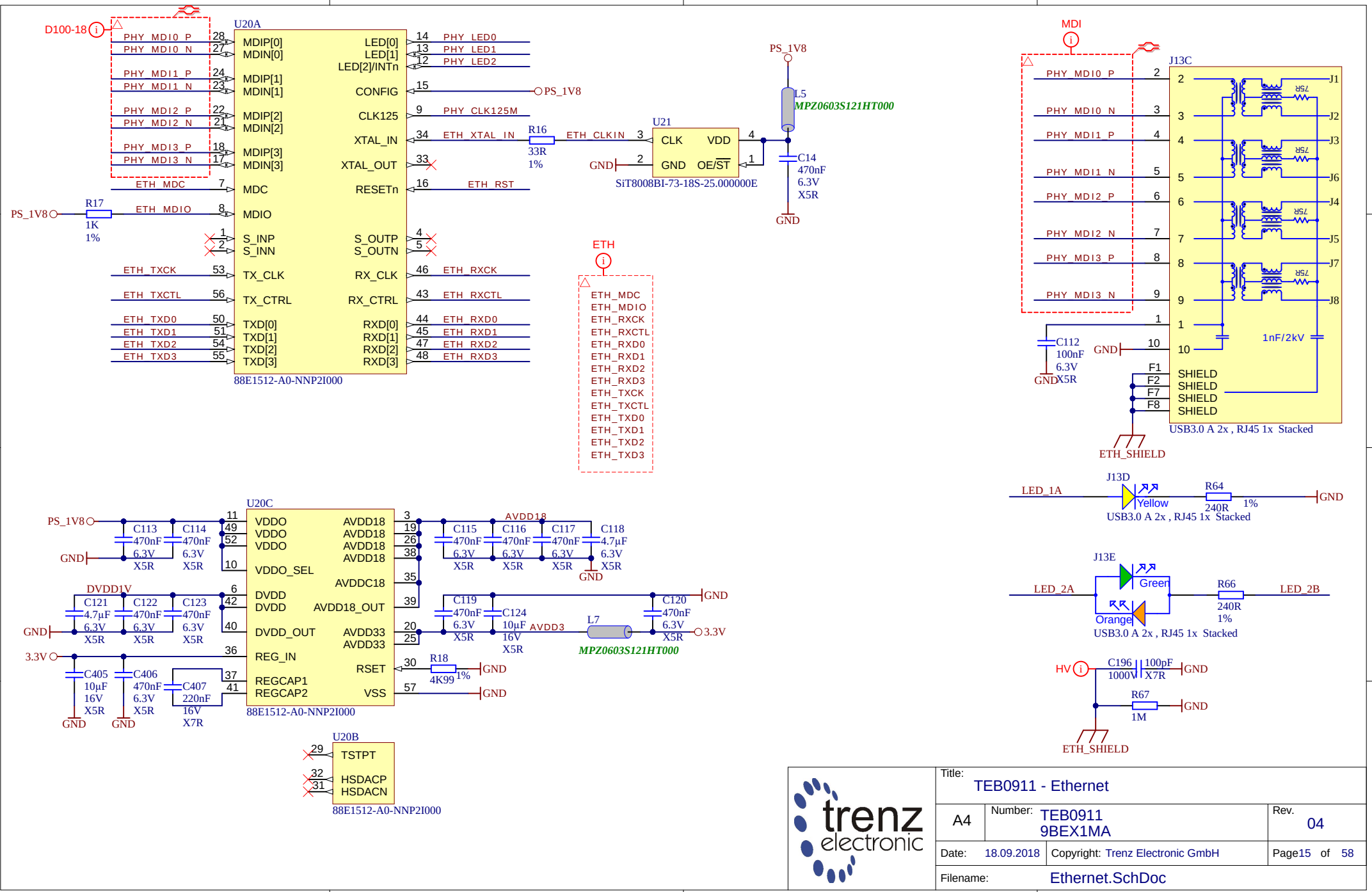

trenz electronic	Title: TEB0911 - Ethernet		
A4	Number: TEB0911 9BEX1MA		Rev. 04
Date: 18.09.2018	Copyright: Trenz Electronic GmbH		Page15 of 58
Filename: Ethernet.SchDoc			

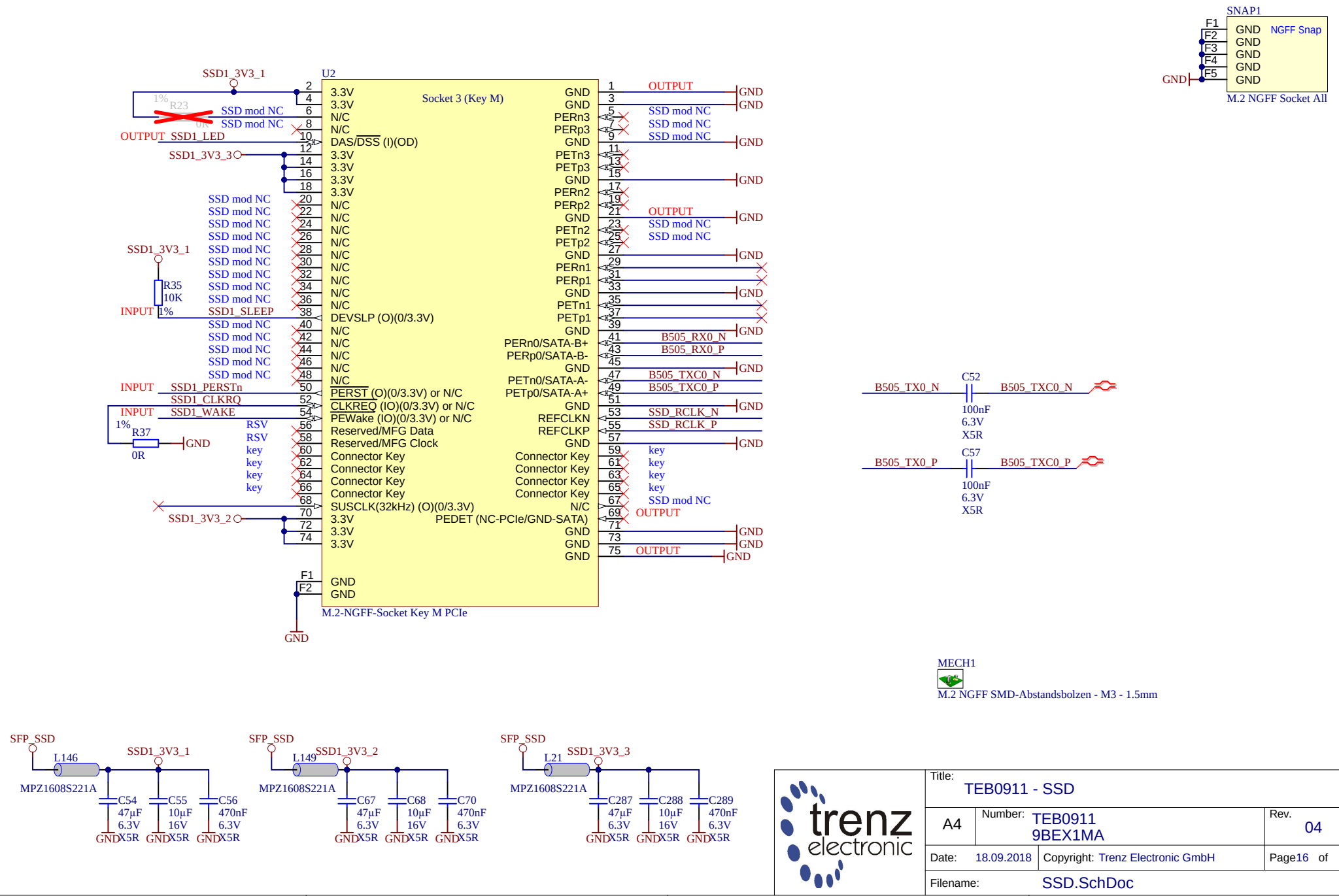

Title: TEB0911 - SSD			
A4	Number: TEB0911 9BEX1MA		Rev. 04
Date: 18.09.2018	Copyright: Trenz Electronic GmbH		Page16 of 58
Filename: SSD.SchDoc			

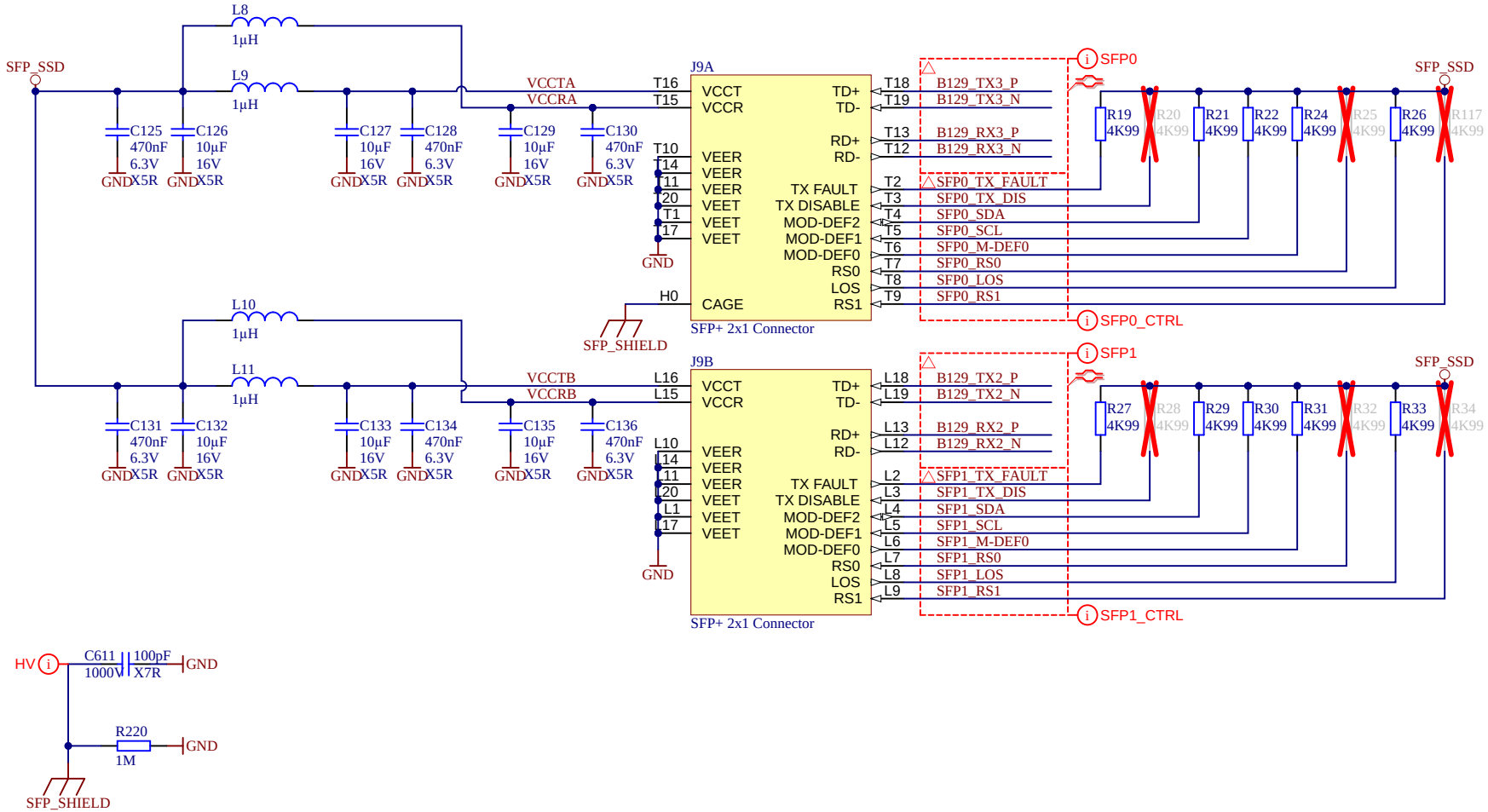

trenz electronic	Title: TEB0911 - SFP		
A4	Number: TEB0911 9BEX1MA		Rev. 04
Date: 18.09.2018	Copyright: Trenz Electronic GmbH		Page17 of 58
Filename: SFP.SchDoc			

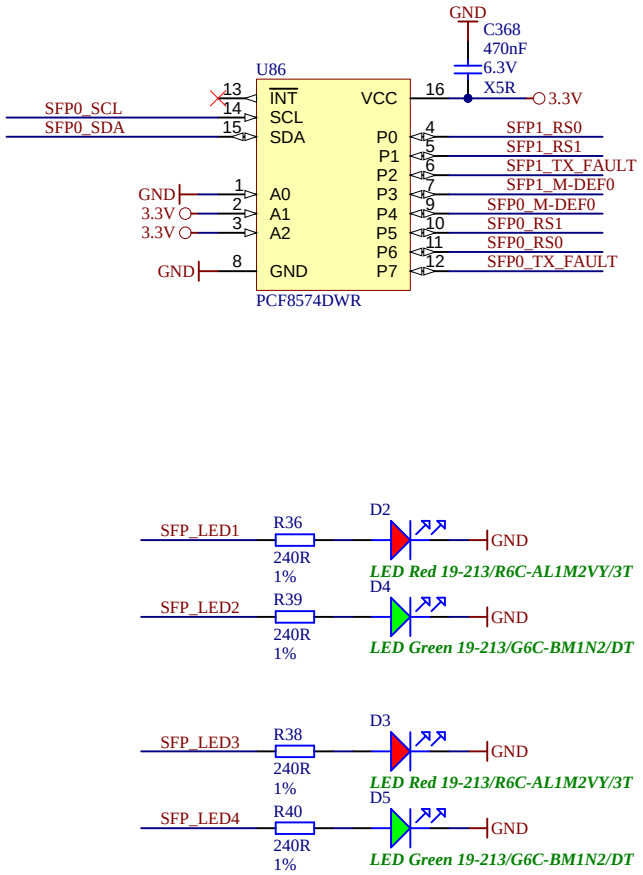

trenz electronic	Title: TEB0911 - SFP		
A4	Number: TEB0911 9BEX1MA		Rev. 04
Date: 18.09.2018	Copyright: Trenz Electronic GmbH		Page18 of 58
Filename: SFP_CTRL.SchDoc			

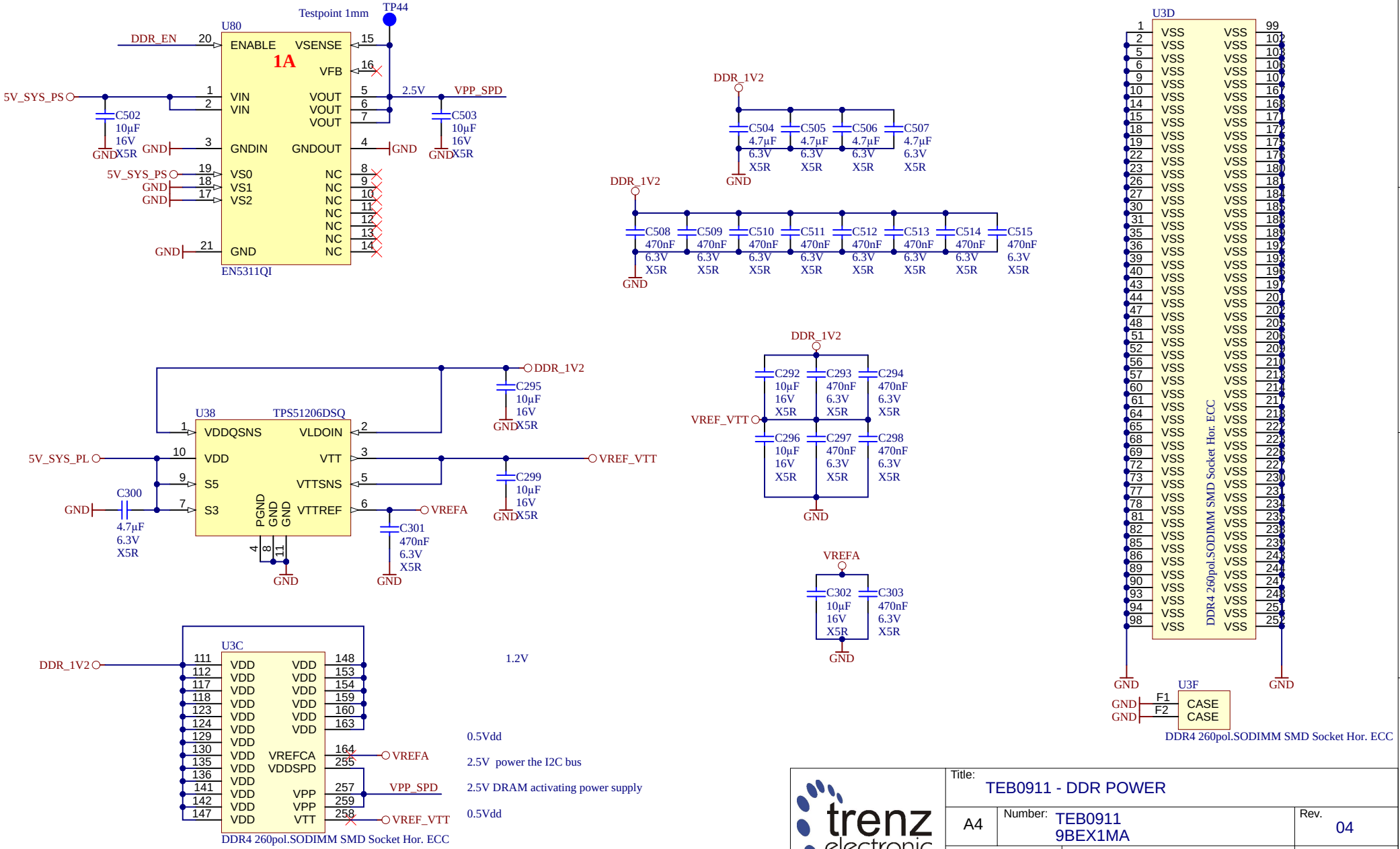

trenz electronic	Title: TEB0911 - DDR POWER		
A4	Number: TEB0911 9BEX1MA		Rev. 04
Date: 18.09.2018	Copyright: Trenz Electronic GmbH		Page19 of 58
Filename: DDR_PWR.SchDoc			

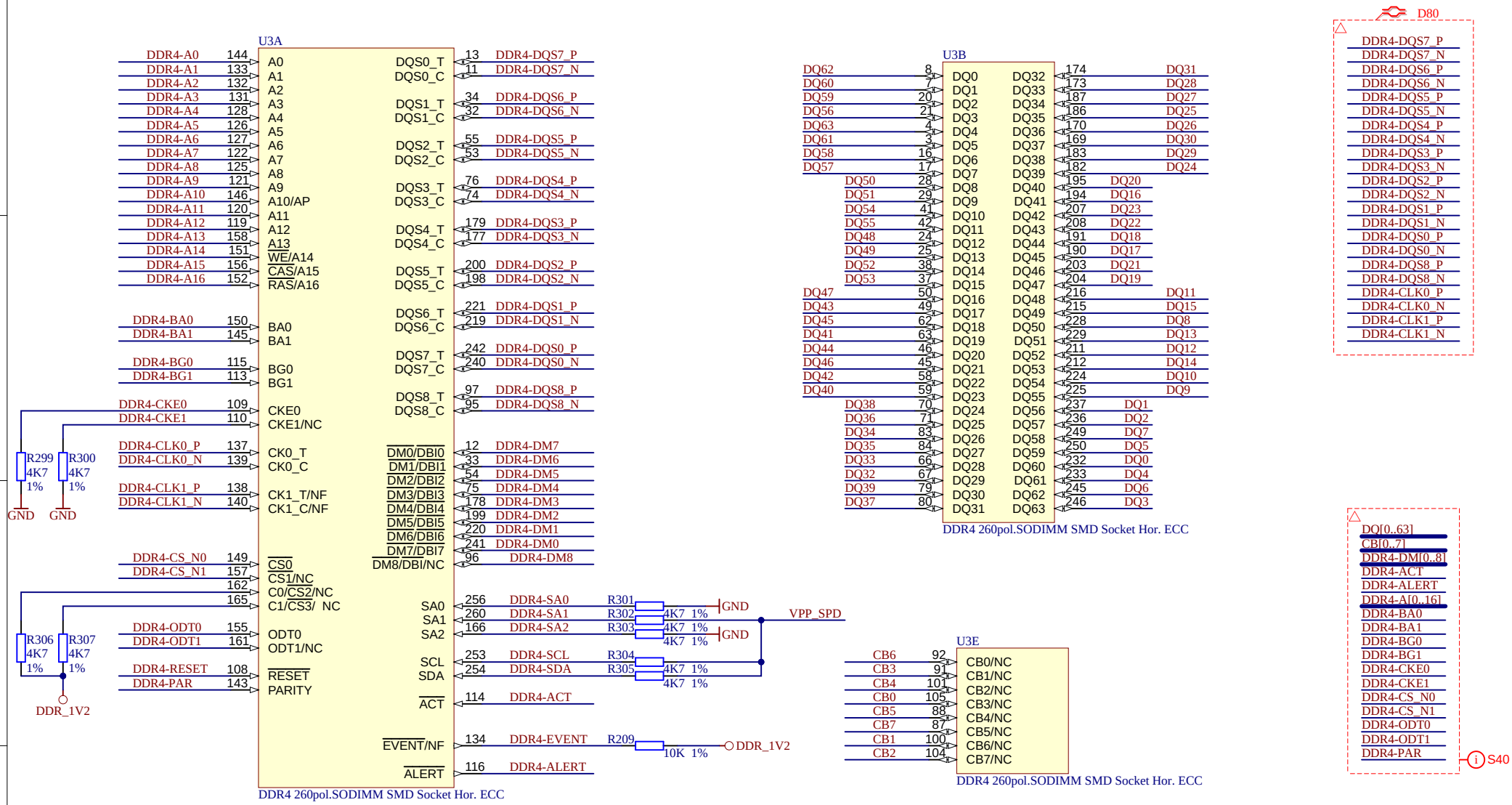

Title: TEB0911 - DDR4 SODIMM

A4	Number: TEB0911 9BEX1MA	Rev. 04
Date: 18.09.2018	Copyright: Trenz Electronic GmbH	Page20 of 58
Filename: DDR_SODIMM.SchDoc		

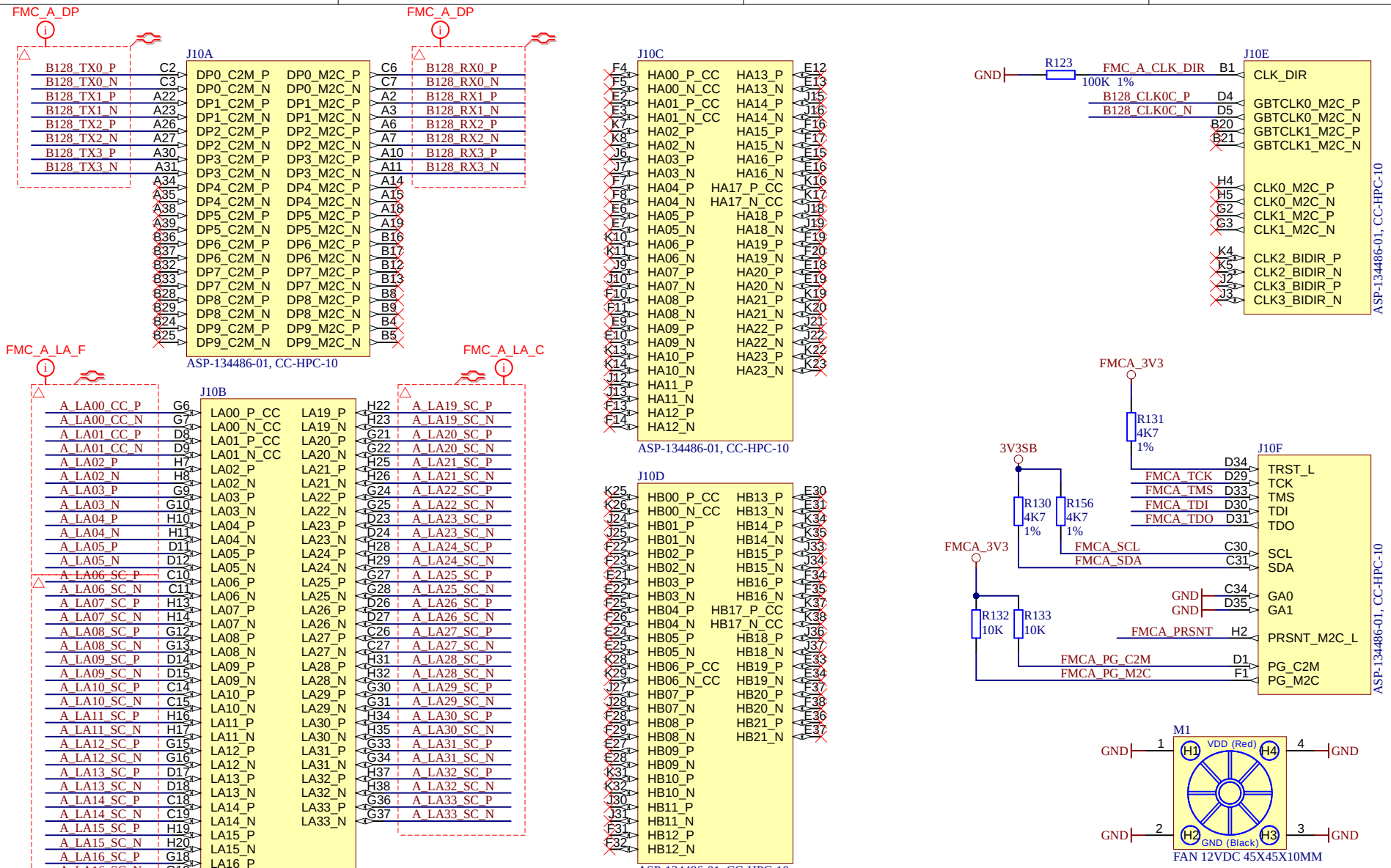

trenz electronic	Title: TEB0911 - FMC A		
A4	Number: TEB0911 9BEX1MA		Rev. 04
Date: 18.09.2018	Copyright: Trenz Electronic GmbH		Page21 of 58
	Filename: FMC_A.SchDoc		

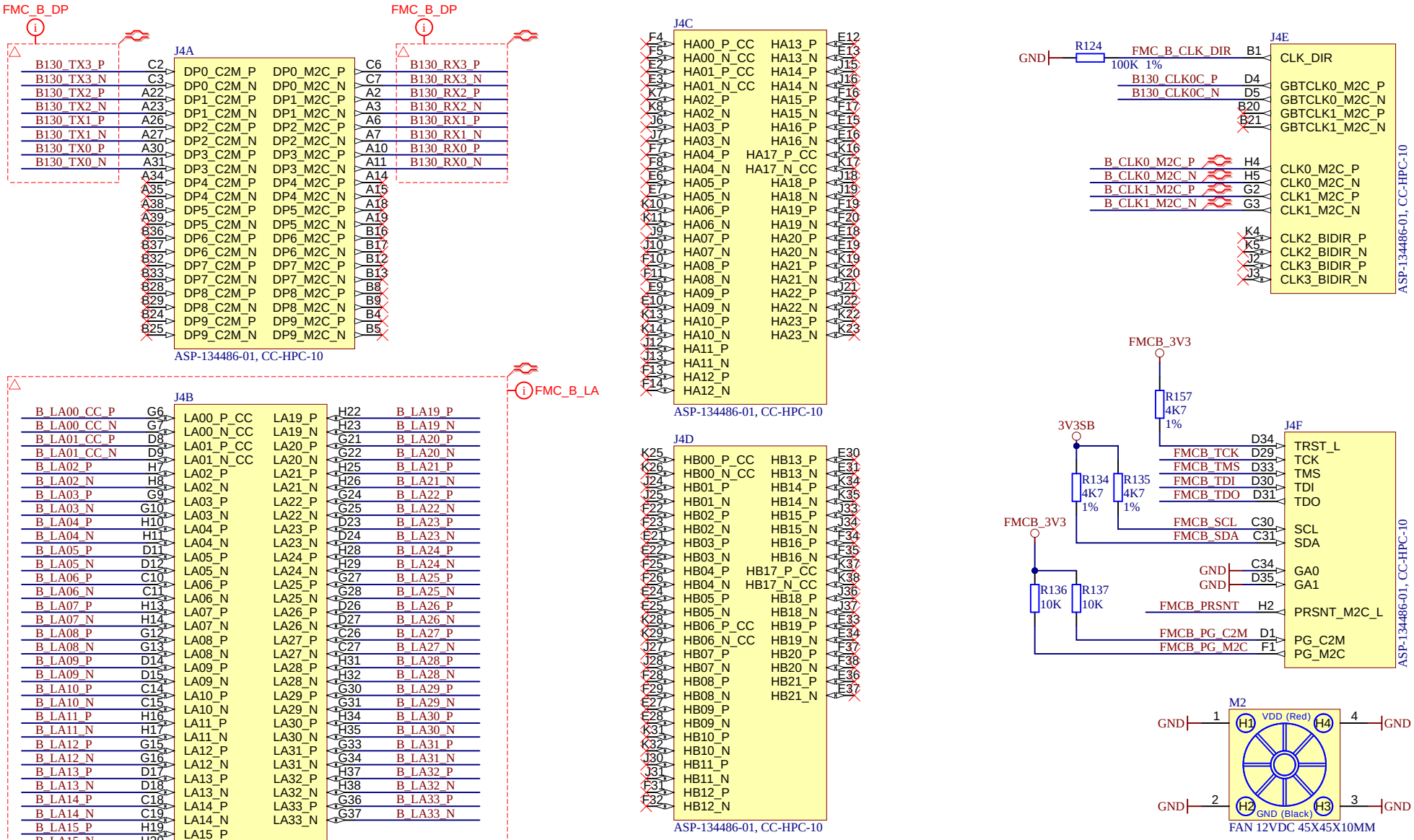

trenz electronic	Title: TEB0911 - FMC B		
A4	Number: TEB0911 9BEX1MA		Rev. 04
Date: 18.09.2018	Copyright: Trenz Electronic GmbH		Page22 of 58
Filename: FMC_B.SchDoc			

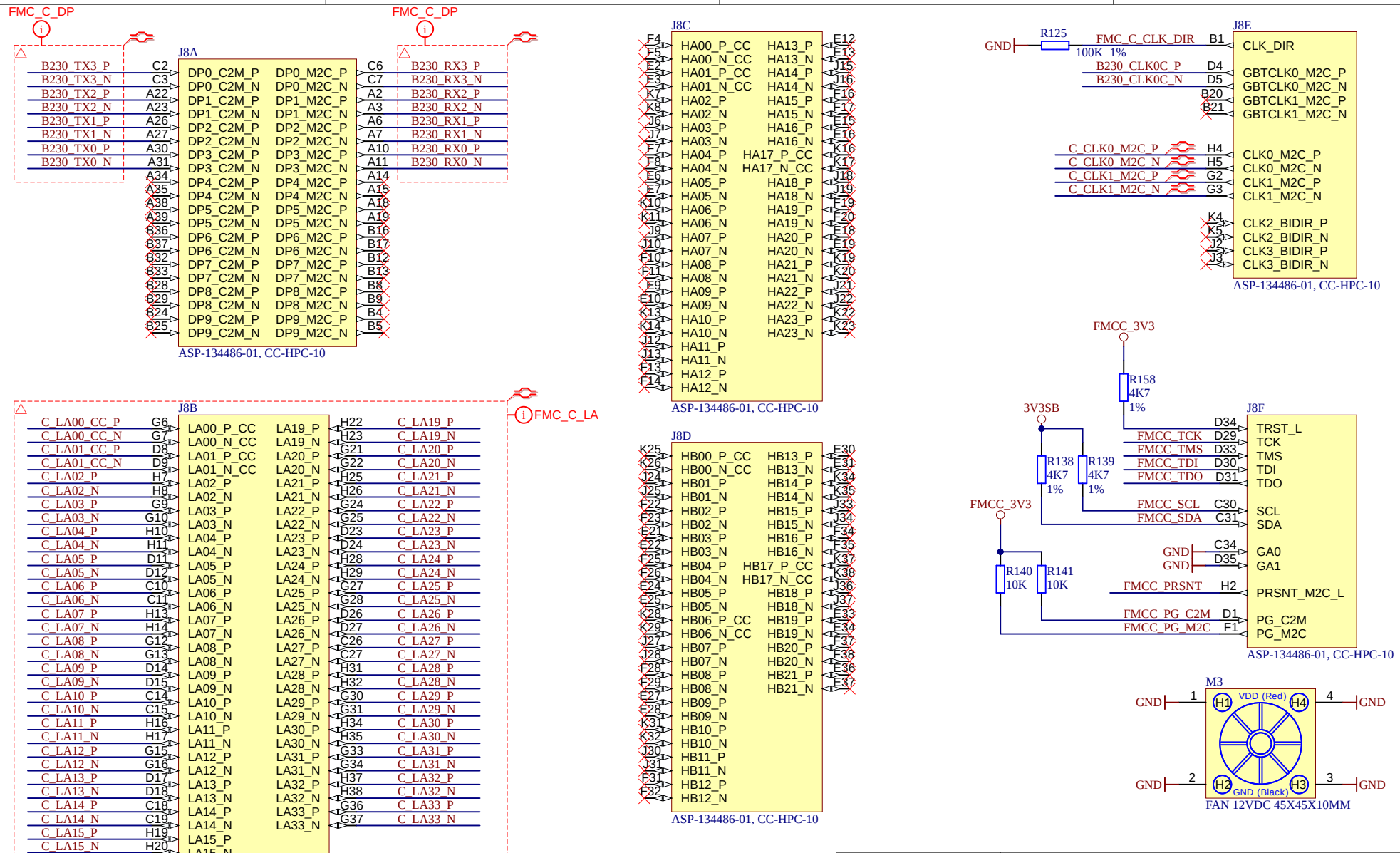

Title: TEB0911 - FMC C			
A4	Number: TEB0911 9BEX1MA		Rev. 04
Date: 18.09.2018	Copyright: Trenz Electronic GmbH		Page23 of 58
Filename: FMC_C.SchDoc			

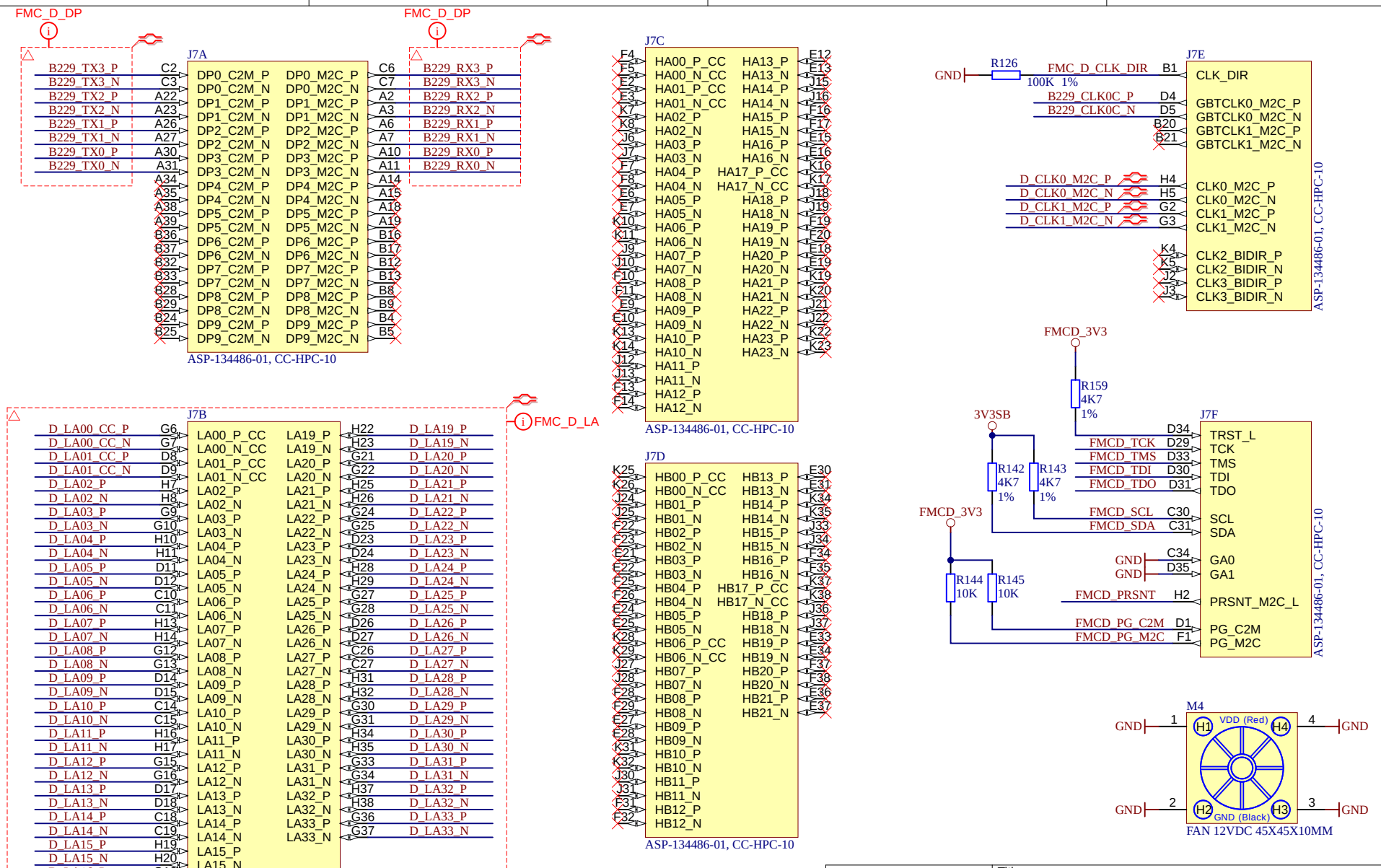

trenz electronic	Title: TEB0911 - FMC D		
A4	Number: TEB0911 9BEX1MA		Rev. 04
Date: 18.09.2018	Copyright: Trenz Electronic GmbH		Page24 of 58
Filename: FMC_D.SchDoc			

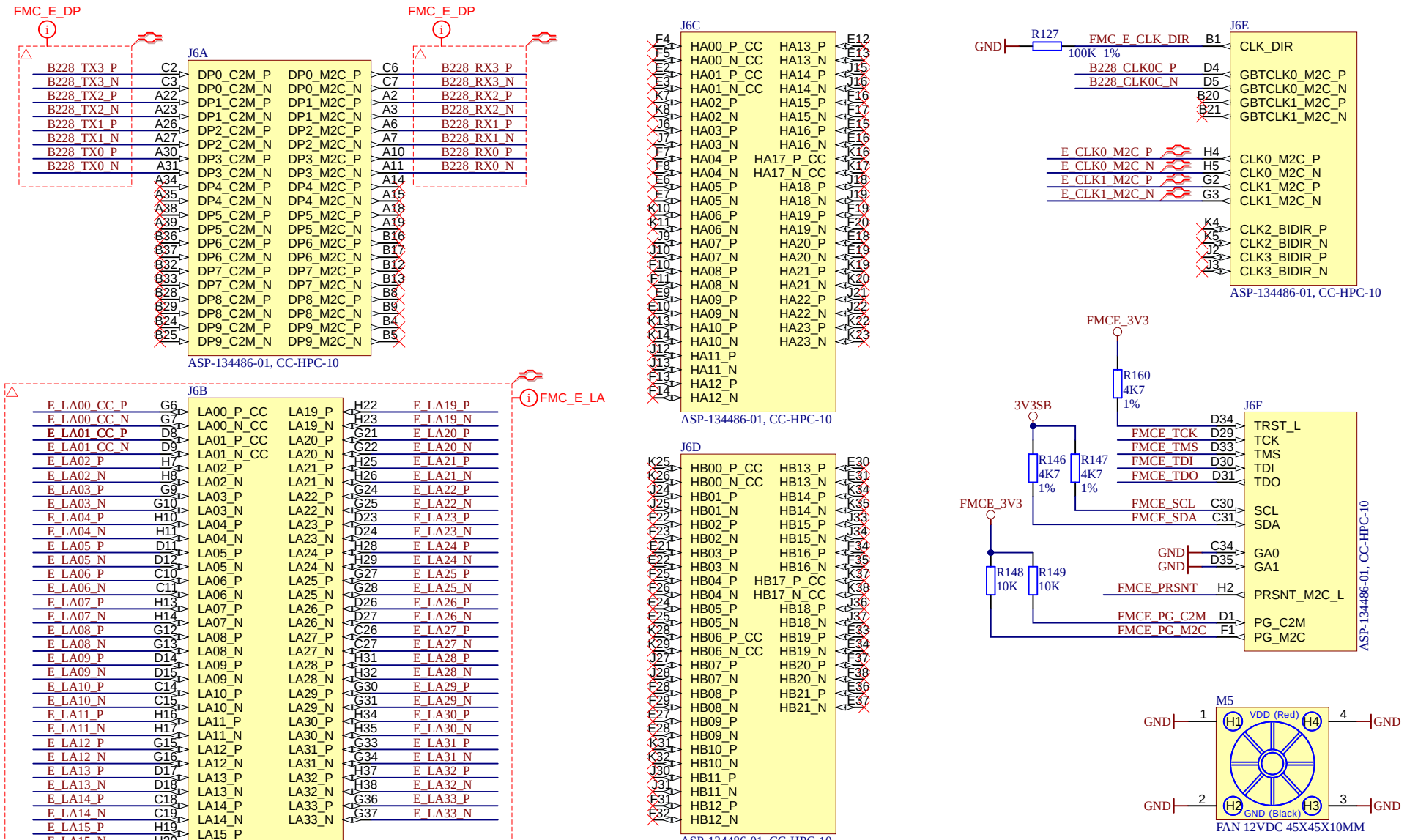

Title: TEB0911 - FMC E			
A4	Number: TEB0911 9BEX1MA		Rev. 04
Date: 18.09.2018	Copyright: Trenz Electronic GmbH		Page25 of 58
Filename: FMC_E.SchDoc			

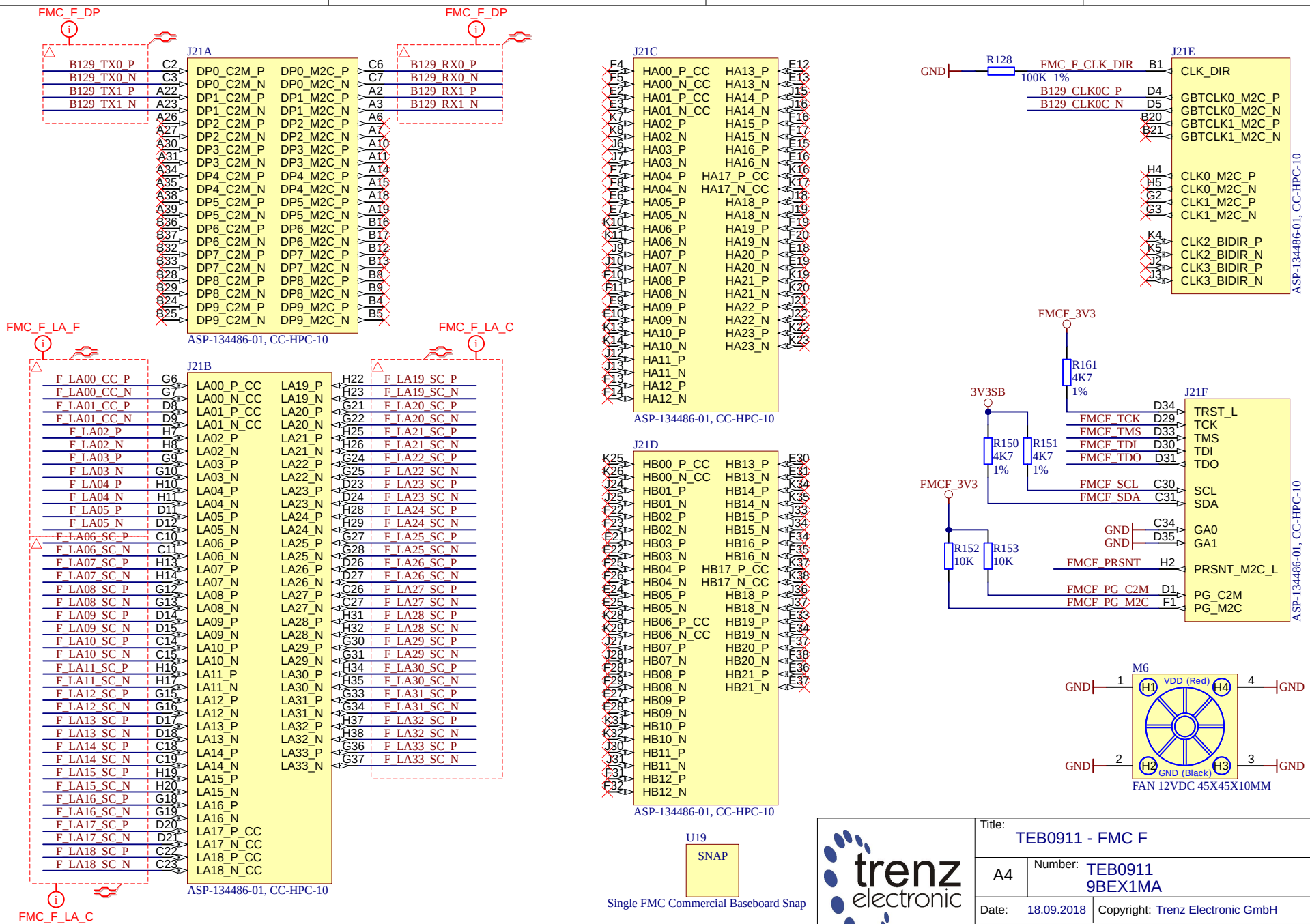
FMC_F_DP
FMC_F_DP
J21A
B129_TX0_P C2 DP0_C2M_P DP0_M2C_P C6 B129_RX0_P
B129_TX0_N C3 DP0_C2M_N DP0_M2C_N C7 B129_RX0_N
B129_TX1_P A22 DP1_C2M_P DP1_M2C_P A2 B129_RX1_P
B129_TX1_N A23 DP1_C2M_N DP1_M2C_N A3 B129_RX1_N
A26 DP2_C2M_P DP2_M2C_P A6
A27 DP2_C2M_N DP2_M2C_N A7
A30 DP3_C2M_P DP3_M2C_P A10
A31 DP3_C2M_N DP3_M2C_N A11
A34 DP4_C2M_P DP4_M2C_P A14
A35 DP4_C2M_N DP4_M2C_N A15
A38 DP5_C2M_P DP5_M2C_P A18
A39 DP5_C2M_N DP5_M2C_N A19
B36 DP6_C2M_P DP6_M2C_P B16
B37 DP6_C2M_N DP6_M2C_N B17
B32 DP7_C2M_P DP7_M2C_P B12
B33 DP7_C2M_N DP7_M2C_N B13
B28 DP8_C2M_P DP8_M2C_P B8
B29 DP8_C2M_N DP8_M2C_N B9
B24 DP9_C2M_P DP9_M2C_P B4
B25 DP9_C2M_N DP9_M2C_N B5
ASP-134486-01, CC-HPC-10
FMC_F_LA_F
FMC_F_LA_C
J21B
F_LA00_CC_P G6 LA00_P_CC LA19_P H22 F_LA19_SC_P
F_LA00_CC_N G7 LA00_N_CC LA19_N H23 F_LA19_SC_N
F_LA01_CC_P D8 LA01_P_CC LA20_P G21 F_LA20_SC_P
F_LA01_CC_N D9 LA01_N_CC LA20_N G22 F_LA20_SC_N
F_LA02_P H7 LA02_P LA21_P H25 F_LA21_SC_P
F_LA02_N H8 LA02_N LA21_N H26 F_LA21_SC_N
F_LA03_P G9 LA03_P LA22_P G24 F_LA22_SC_P
F_LA03_N G10 LA03_N LA22_N G25 F_LA22_SC_N
F_LA04_P H10 LA04_P LA23_P D23 F_LA23_SC_P
F_LA04_N H11 LA04_N LA23_N D24 F_LA23_SC_N
F_LA05_P D11 LA05_P LA24_P H28 F_LA24_SC_P
F_LA05_N D12 LA05_N LA24_N H29 F_LA24_SC_N
F_LA06_SC_P C10 LA06_P LA25_P G27 F_LA25_SC_P
F_LA06_SC_N C11 LA06_N LA25_N G28 F_LA25_SC_N
F_LA07_SC_P H13 LA07_P LA26_P D26 F_LA26_SC_P
F_LA07_SC_N H14 LA07_N LA26_N D27 F_LA26_SC_N
F_LA08_SC_P G12 LA08_P LA27_P C26 F_LA27_SC_P
F_LA08_SC_N G13 LA08_N LA27_N C27 F_LA27_SC_N
F_LA09_SC_P D14 LA09_P LA28_P H31 F_LA28_SC_P
F_LA09_SC_N D15 LA09_N LA28_N H32 F_LA28_SC_N
F_LA10_SC_P C14 LA10_P LA29_P G30 F_LA29_SC_P
F_LA10_SC_N C15 LA10_N LA29_N G31 F_LA29_SC_N
F_LA11_SC_P H16 LA11_P LA30_P H34 F_LA30_SC_P
F_LA11_SC_N H17 LA11_N LA30_N H35 F_LA30_SC_N
F_LA12_SC_P G15 LA12_P LA31_P G33 F_LA31_SC_P
F_LA12_SC_N G16 LA12_N LA31_N G34 F_LA31_SC_N
F_LA13_SC_P D17 LA13_P LA32_P H37 F_LA32_SC_P
F_LA13_SC_N D18 LA13_N LA32_N H38 F_LA32_SC_N
F_LA14_SC_P C18 LA14_P LA33_P G36 F_LA33_SC_P
F_LA14_SC_N C19 LA14_N LA33_N G37 F_LA33_SC_N
F_LA15_SC_P H19 LA15_P
F_LA15_SC_N H20 LA15_N
F_LA16_SC_P G18 LA16_P
F_LA16_SC_N G19 LA16_N
F_LA17_SC_P D20 LA17_P_CC
F_LA17_SC_N D21 LA17_N_CC
F_LA18_SC_P C22 LA18_P_CC
F_LA18_SC_N C23 LA18_N_CC
ASP-134486-01, CC-HPC-10
FMC_F_LA_C
J21C
F4 HA00_P_CC HA13_P E12
F5 HA00_N_CC HA13_N E13
E2 HA01_P_CC HA14_P J15
E3 HA01_N_CC HA14_N J16
K7 HA02_P HA15_P F16
K8 HA02_N HA15_N F17
J6 HA03_P HA16_P E15
J7 HA03_N HA16_N E16
F7 HA04_P HA17_P_CC K16
F8 HA04_N HA17_N_CC K17
E6 HA05_P HA18_P J18
E7 HA05_N HA18_N J19
K10 HA06_P HA19_P F19
K11 HA06_N HA19_N F20
J9 HA07_P HA20_P E18
J10 HA07_N HA20_N E19
F10 HA08_P HA21_P K19
F11 HA08_N HA21_N K20
E9 HA09_P HA22_P J21
E10 HA09_N HA22_N J22
K13 HA10_P HA23_P K22
K14 HA10_N HA23_N K23
J12 HA11_P
J13 HA11_N
F13 HA12_P
F14 HA12_N
ASP-134486-01, CC-HPC-10
J21D
K25 HB00_P_CC HB13_P E30
K26 HB00_N_CC HB13_N E31
J24 HB01_P HB14_P K34
J25 HB01_N HB14_N K35
F22 HB02_P HB15_P J33
F23 HB02_N HB15_N J34
E21 HB03_P HB16_P F34
E22 HB03_N HB16_N F35
F25 HB04_P HB17_P_CC K37
F26 HB04_N HB17_N_CC K38
E24 HB05_P HB18_P J36
E25 HB05_N HB18_N J37
K28 HB06_P_CC HB19_P E33
K29 HB06_N_CC HB19_N E34
J27 HB07_P HB20_P F37
J28 HB07_N HB20_N F38
F28 HB08_P HB21_P E36
F29 HB08_N HB21_N E37
E27 HB09_P
E28 HB09_N
K31 HB10_P
K32 HB10_N
J30 HB11_P
J31 HB11_N
F31 HB12_P
F32 HB12_N
ASP-134486-01, CC-HPC-10
U19
SNAP
Single FMC Commercial Baseboard Snap
GND
R128
100K 1%
FMC_F_CLK_DIR B1 CLK_DIR
B129_CLK0C_P D4 GBTCLK0_M2C_P
B129_CLK0C_N D5 GBTCLK0_M2C_N
B20 GBTCLK1_M2C_P
B21 GBTCLK1_M2C_N
H4 CLK0_M2C_P
H5 CLK0_M2C_N
G2 CLK1_M2C_P
G3 CLK1_M2C_N
K4 CLK2_BIDIR_P
K5 CLK2_BIDIR_N
J2 CLK3_BIDIR_P
J3 CLK3_BIDIR_N
J21E
ASP-134486-01, CC-HPC-10
FMCF_3V3
R161
4K7
1%
3V3SB
R150
4K7
1%
R151
4K7
1%
FMCF_3V3
R152
10K
R153
10K
J21F
D34 TRST_L
FMCF_TCK D29 TCK
FMCF_TMS D33 TMS
FMCF_TDI D30 TDI
FMCF_TDO D31 TDO
FMCF_SCL C30 SCL
FMCF_SDA C31 SDA
GND C34 GA0
GND D35 GA1
FMCF_PRSNT H2 PRSNT_M2C_L
FMCF_PG_C2M D1 PG_C2M
FMCF_PG_M2C F1 PG_M2C
ASP-134486-01, CC-HPC-10
M6
GND 1 H1 VDD (Red) H4 4 GND
GND 2 H2 GND (Black) H3 3 GND
FAN 12VDC 45X45X10MM
trenz electronic
Title: TEB0911 - FMC F
A4
Number: TEB0911 9BEX1MA
Rev. 04
Date: 18.09.2018
Copyright: Trenz Electronic GmbH
Page26 of 58
Filename: FMC_F.SchDoc

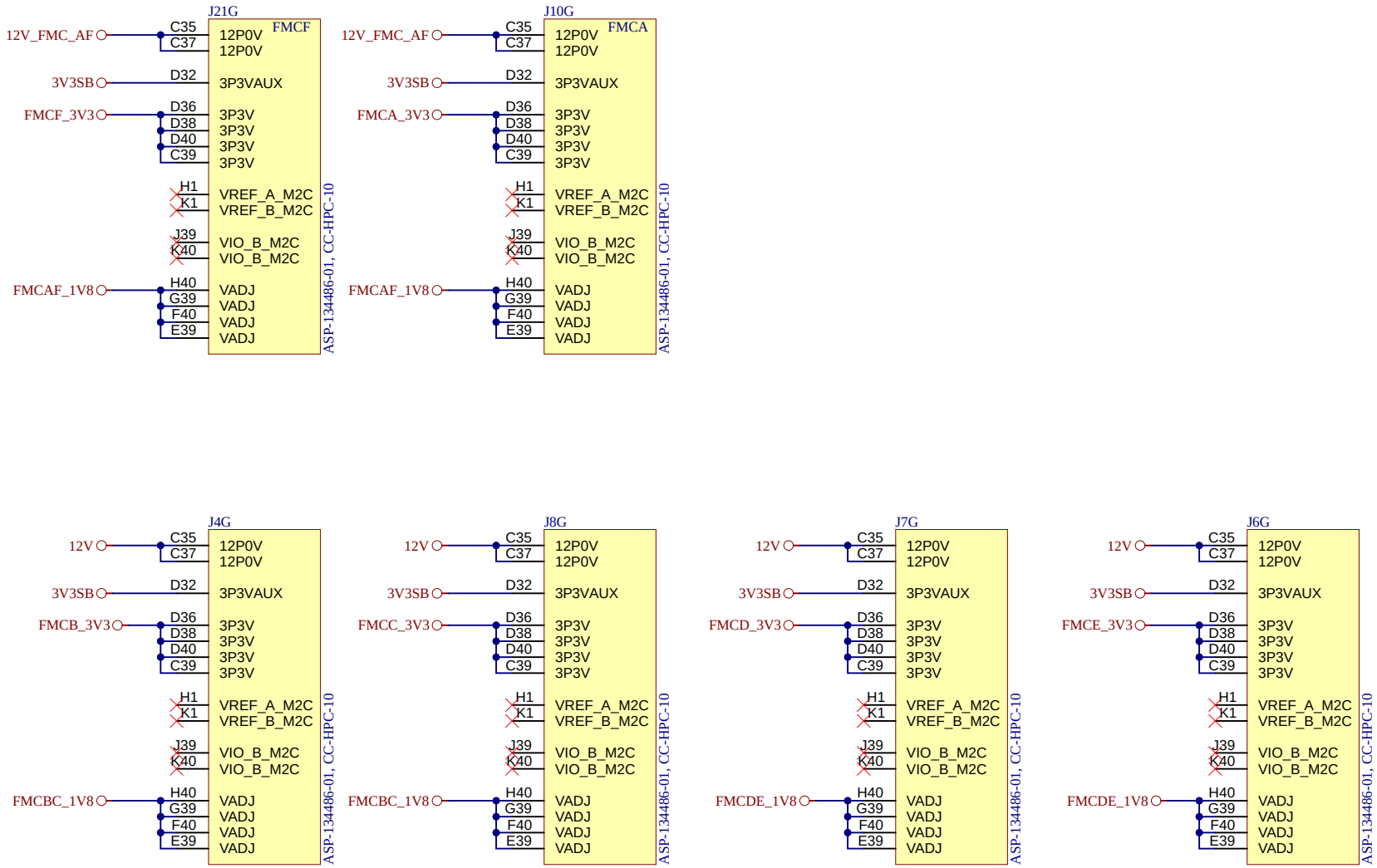

FMC_A
FMC_A.SchDoc

FMC_B
FMC_B.SchDoc

FMC_C
FMC_C.SchDoc

FMC_D
FMC_D.SchDoc

FMC_E
FMC_E.SchDoc

FMC_F
FMC_F.SchDoc

FMC GND
FMC GND.SchDoc

FMC GND2
FMC GND2.SchDoc

FMC_MECH
FMC_MECH.SchDoc

trenz electronic	Title: TEB0911 - FMC POWER		
A4	Number: TEB0911 9BEX1MA		Rev. 04
Date: 18.09.2018	Copyright: Trenz Electronic GmbH		Page27 of 58
Filename: FMC PWR.SchDoc			

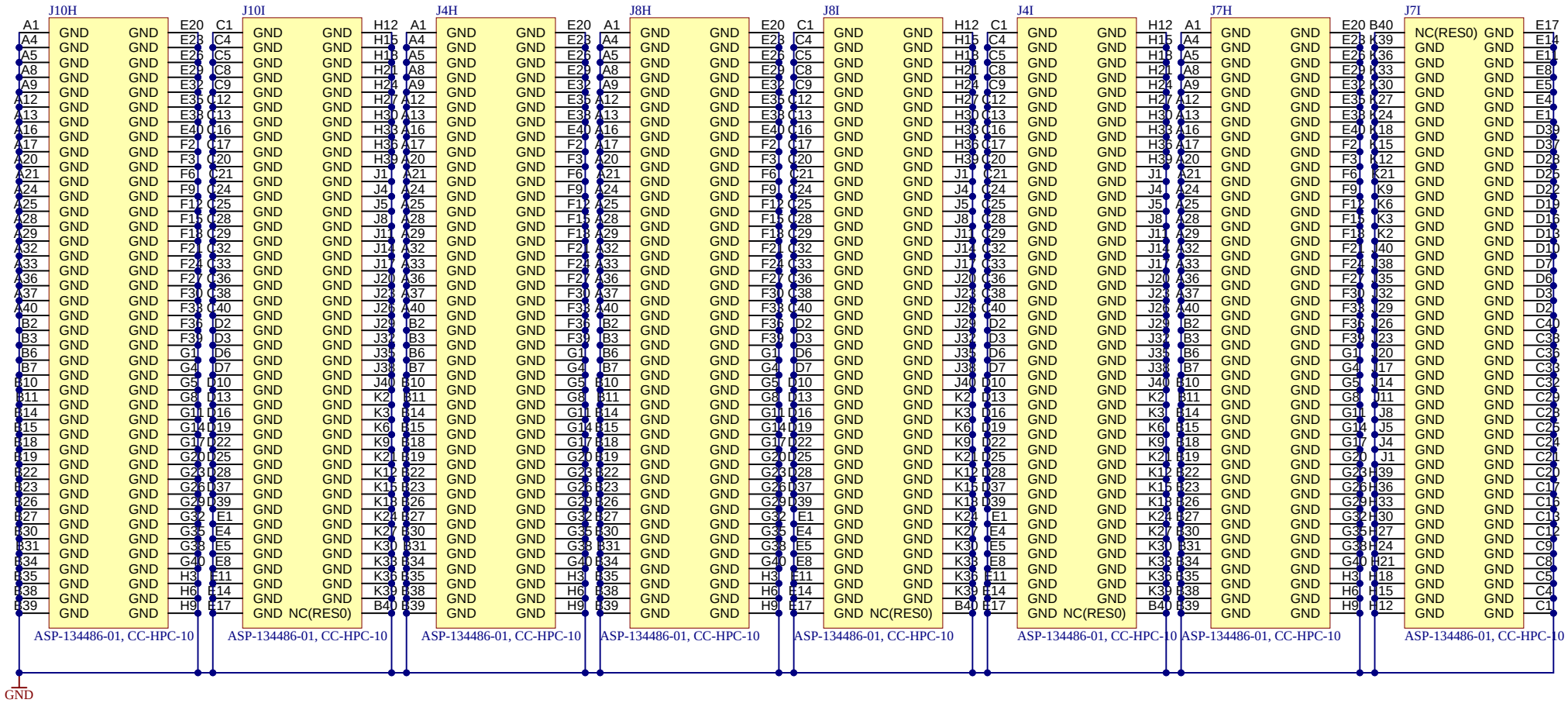

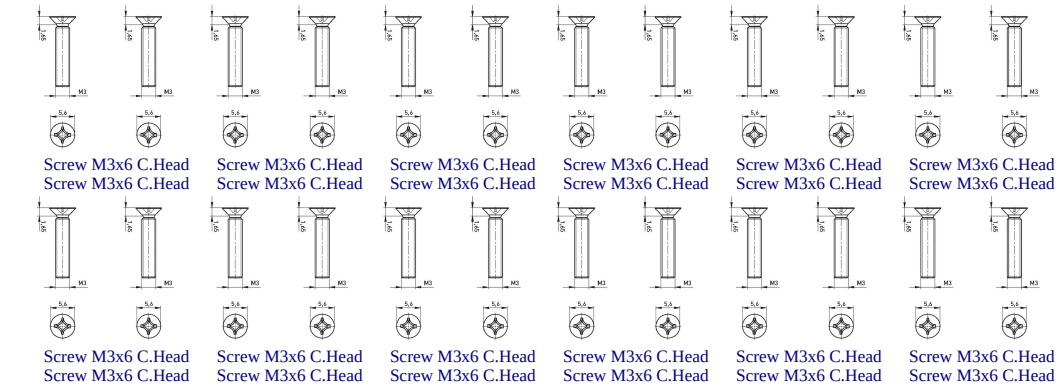

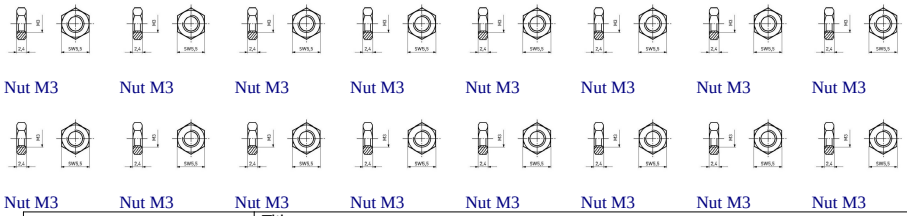

trenz electronic	Title: TEB0911 - FMC GND	
A4	Number: TEB0911 9BEX1MA	Rev. 04
Date: 18.09.2018	Copyright: Trenz Electronic GmbH	Page28 of 58
	Filename: FMC GND.SchDoc	

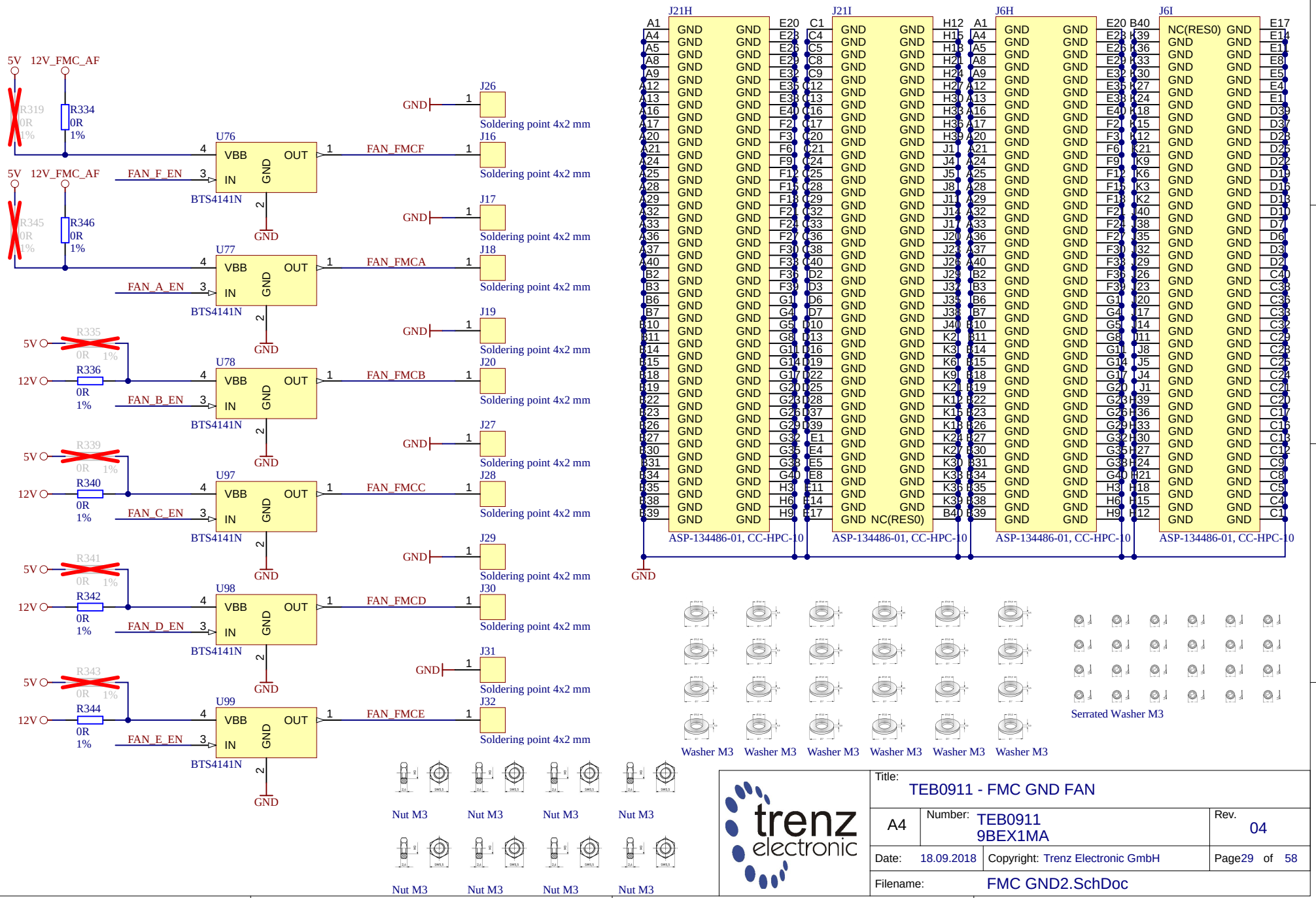

trenz electronic

Title: TEB0911 - FMC GND FAN			
A4	Number: TEB0911 9BEX1MA		Rev. 04
Date: 18.09.2018	Copyright: Trenz Electronic GmbH		Page29 of 58
Filename: FMC GND2.SchDoc			

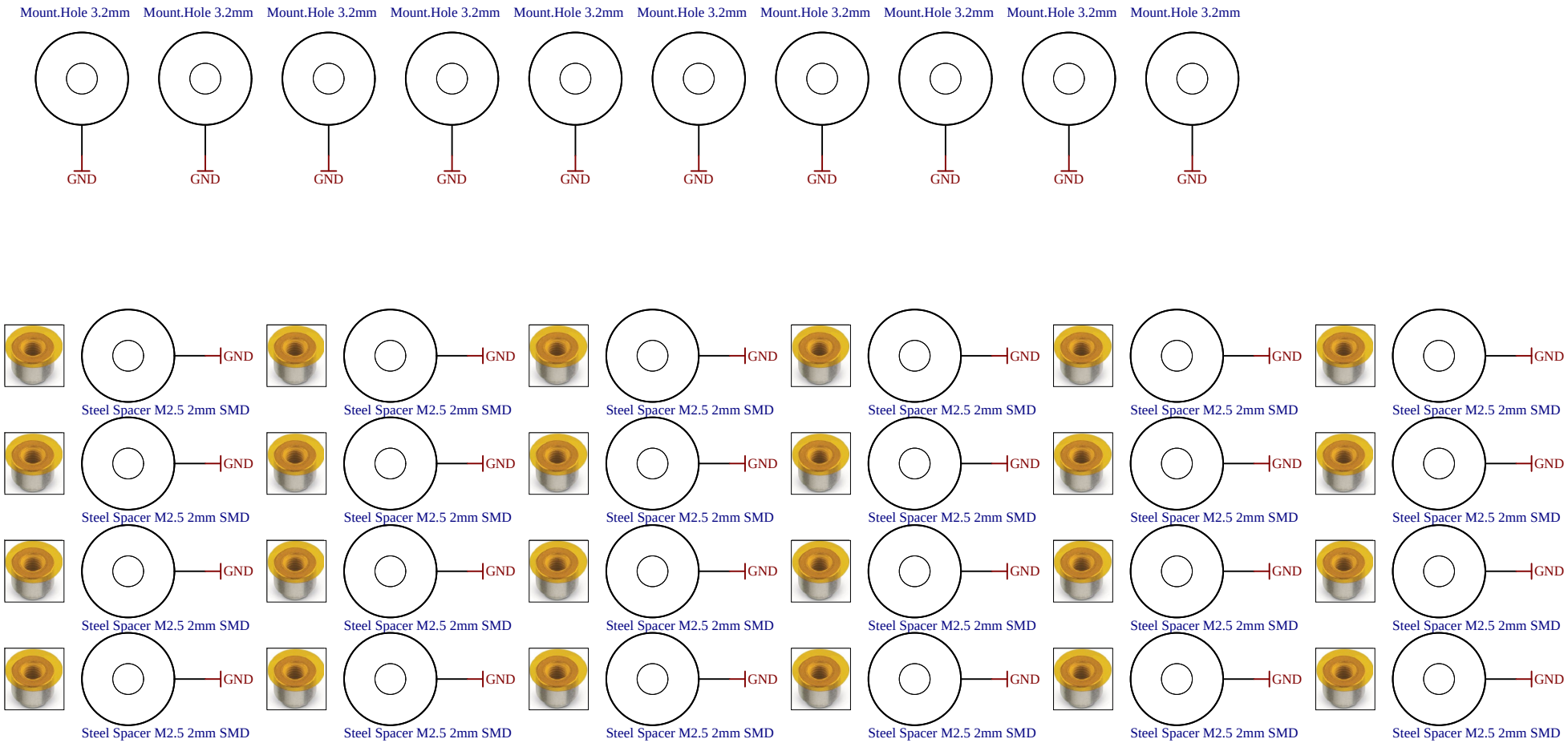

Title: TEB0911 - FMC MECH			
A4	Number: TEB0911 9BEX1MA		Rev. 04
Date: 18.09.2018	Copyright: Trenz Electronic GmbH		Page30 of 58
Filename: FMC_MECH.SchDoc			

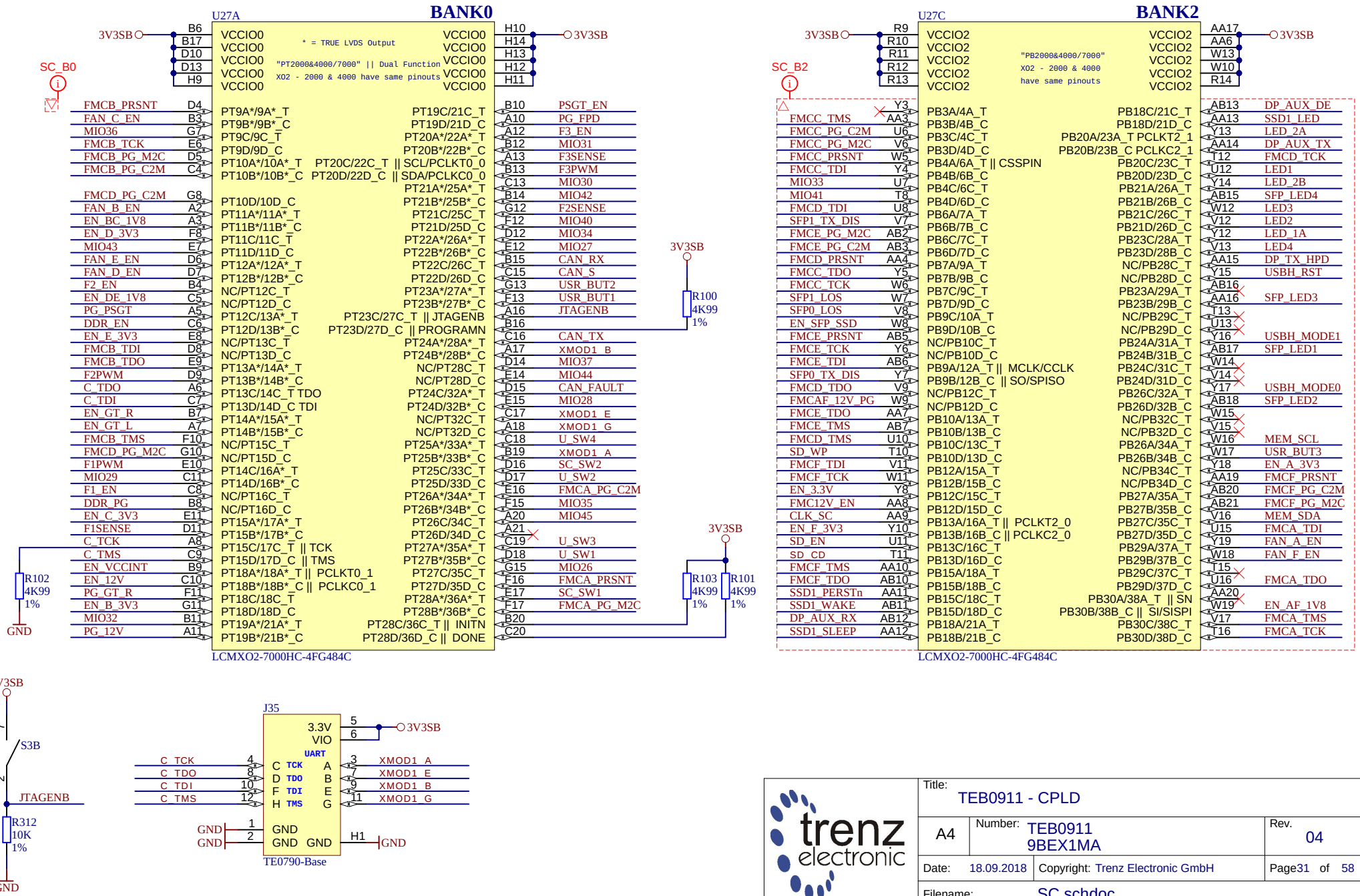
BANK0
U27A
* = TRUE LVDS Output
"PT2000&4000/7000" || Dual Function
XO2 - 2000 & 4000 have same pinouts
LCMXO2-7000HC-4FG484C
BANK2
U27C
"PB2000&4000/7000"
XO2 - 2000 & 4000
have same pinouts
LCMXO2-7000HC-4FG484C
3V3SB
SC_B0
SC_B2
R100 4K99 1%
R101 4K99 1%
R102 4K99 1%
R103 4K99 1%
GND
CHS-04TA
S3B
JTAGENB
R312 10K 1%
J35
3.3V
VIO
UART
TE0790-Base
C_TCK
C_TDO
C_TDI
C_TMS
XMOD1_A
XMOD1_E
XMOD1_B
XMOD1_G
H1
Title:
TEB0911 - CPLD
A4
Number:
TEB0911
9BEX1MA
Rev.
04
Date:
18.09.2018
Copyright: Trenz Electronic GmbH
Page31 of 58
Filename:
SC.schdoc
trenz electronic

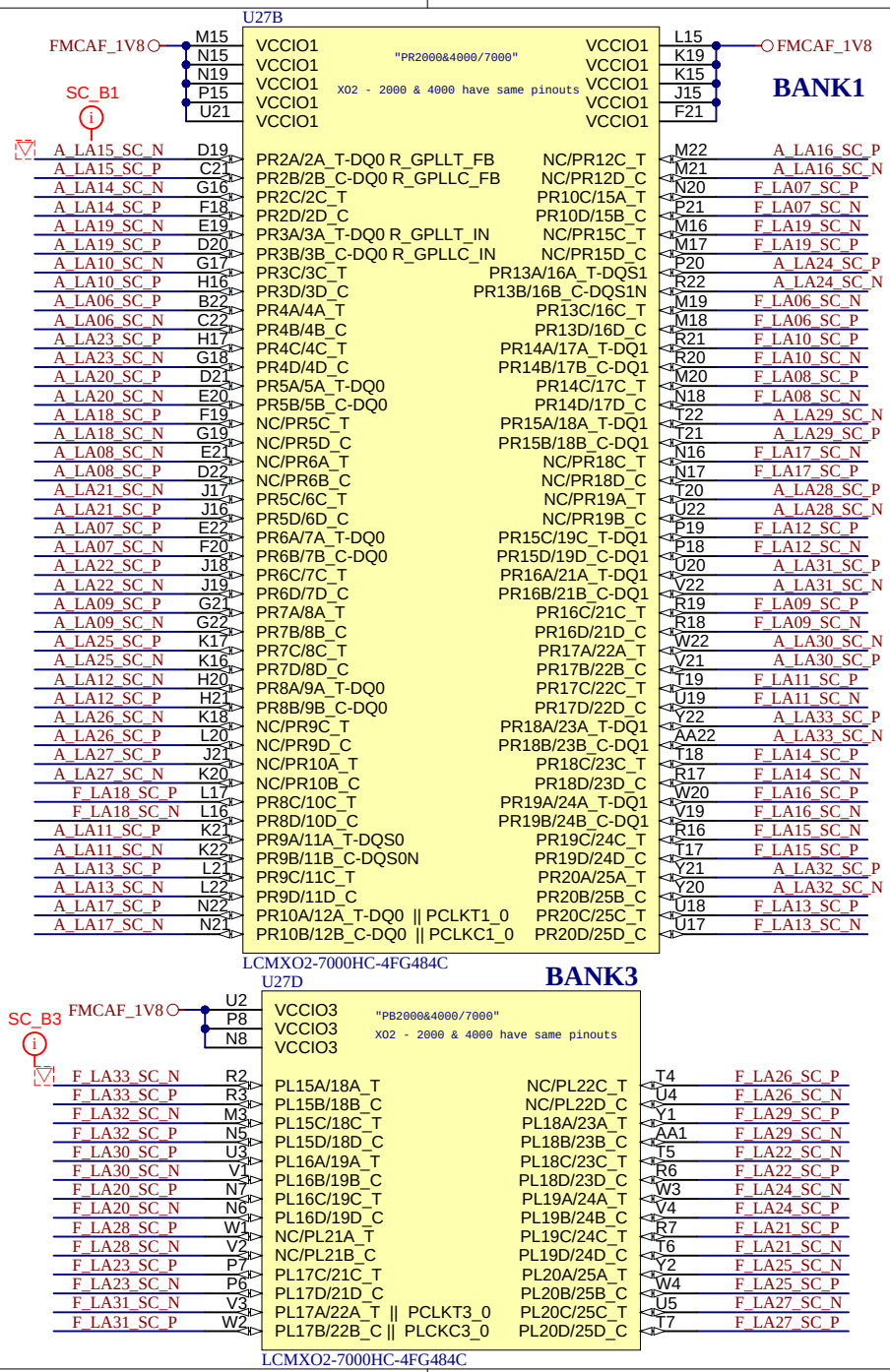

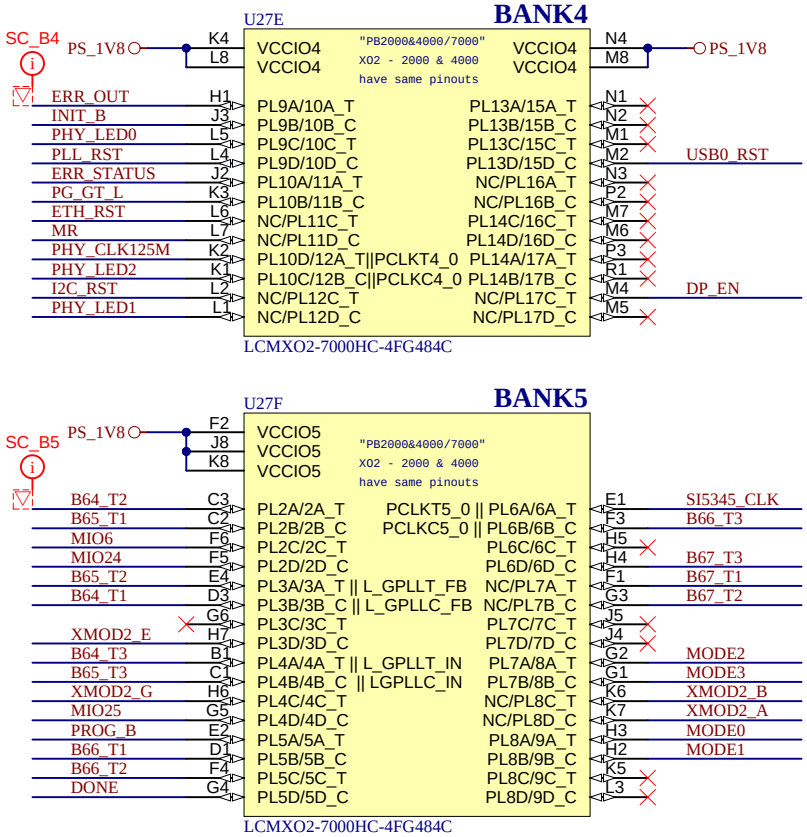

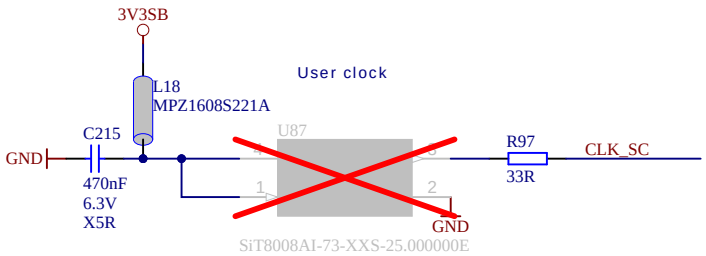

trenz electronic	Title: TEB0911 - CPLD		
A4	Number: TEB0911 9BEX1MA		Rev. 04
Date: 18.09.2018	Copyright: Trenz Electronic GmbH		Page32 of 58
Filename: SC2.schdoc			

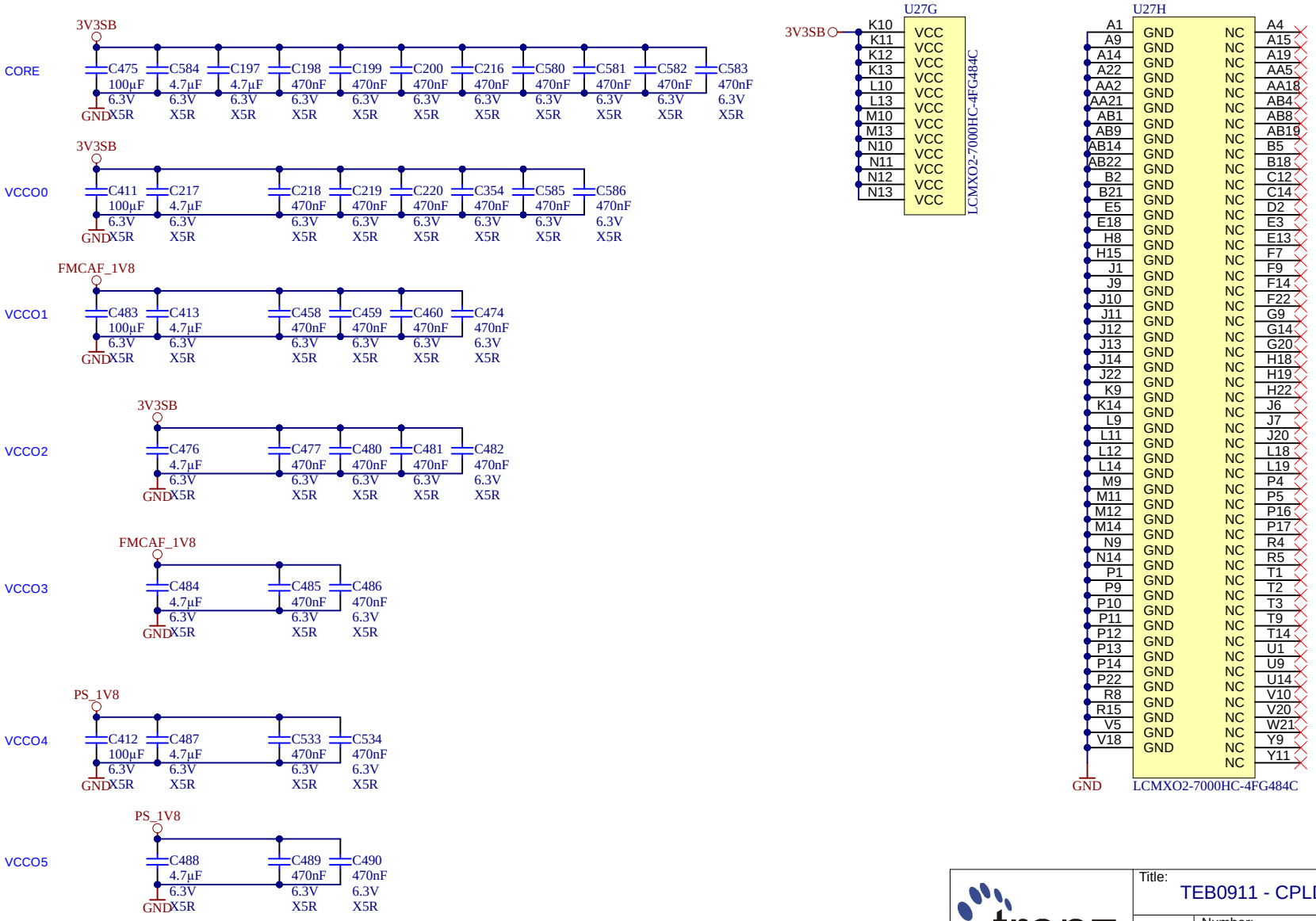

trenz electronic	Title: TEB0911 - CPLD		
A4	Number: TEB0911 9BEX1MA		Rev. 04
Date: 18.09.2018	Copyright: Trenz Electronic GmbH		Page33 of 58
Filename: SC_POWER.schdoc			

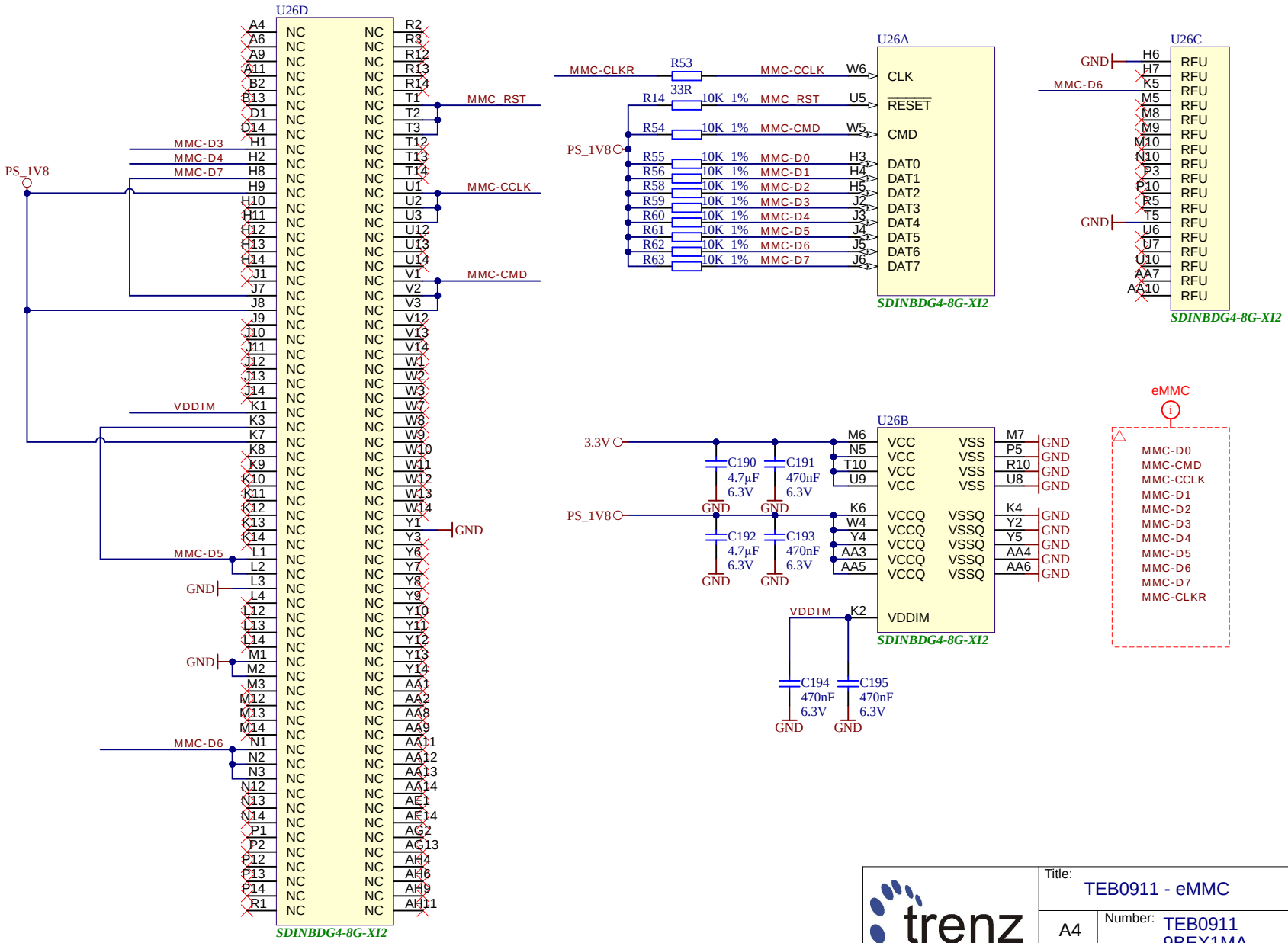

trenz electronic	Title: TEB0911 - eMMC		
A4	Number: TEB0911 9BEX1MA		Rev. 04
Date: 18.09.2018	Copyright: Trenz Electronic GmbH		Page34 of 58
Filename: eMMC.SchDoc			

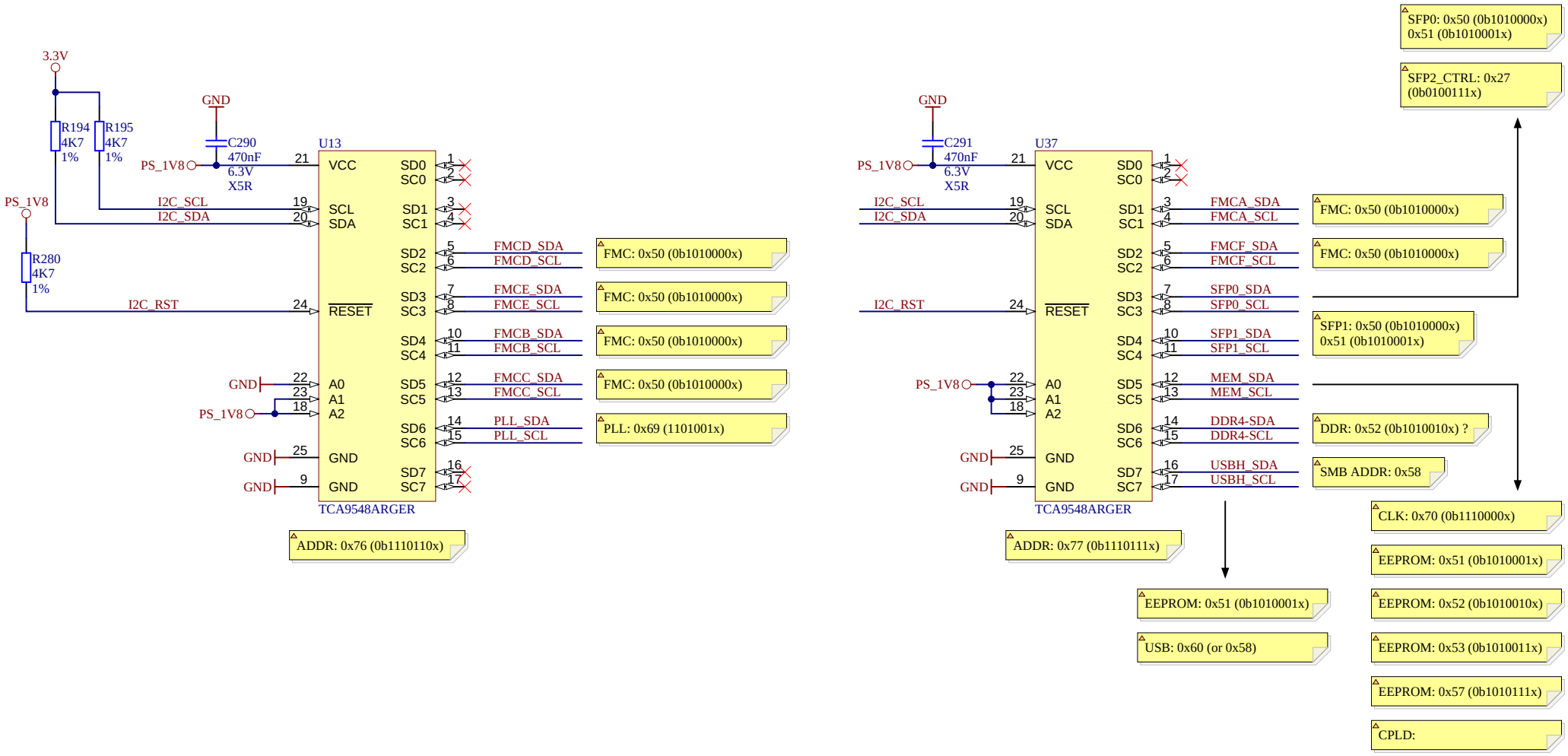

trenz electronic	Title: TEB0911 - I2C System		
A4	Number: TEB0911 9BEX1MA		Rev. 04
Date: 18.09.2018	Copyright: Trenz Electronic GmbH		Page35 of 58
Filename: I2C_system.schdoc			

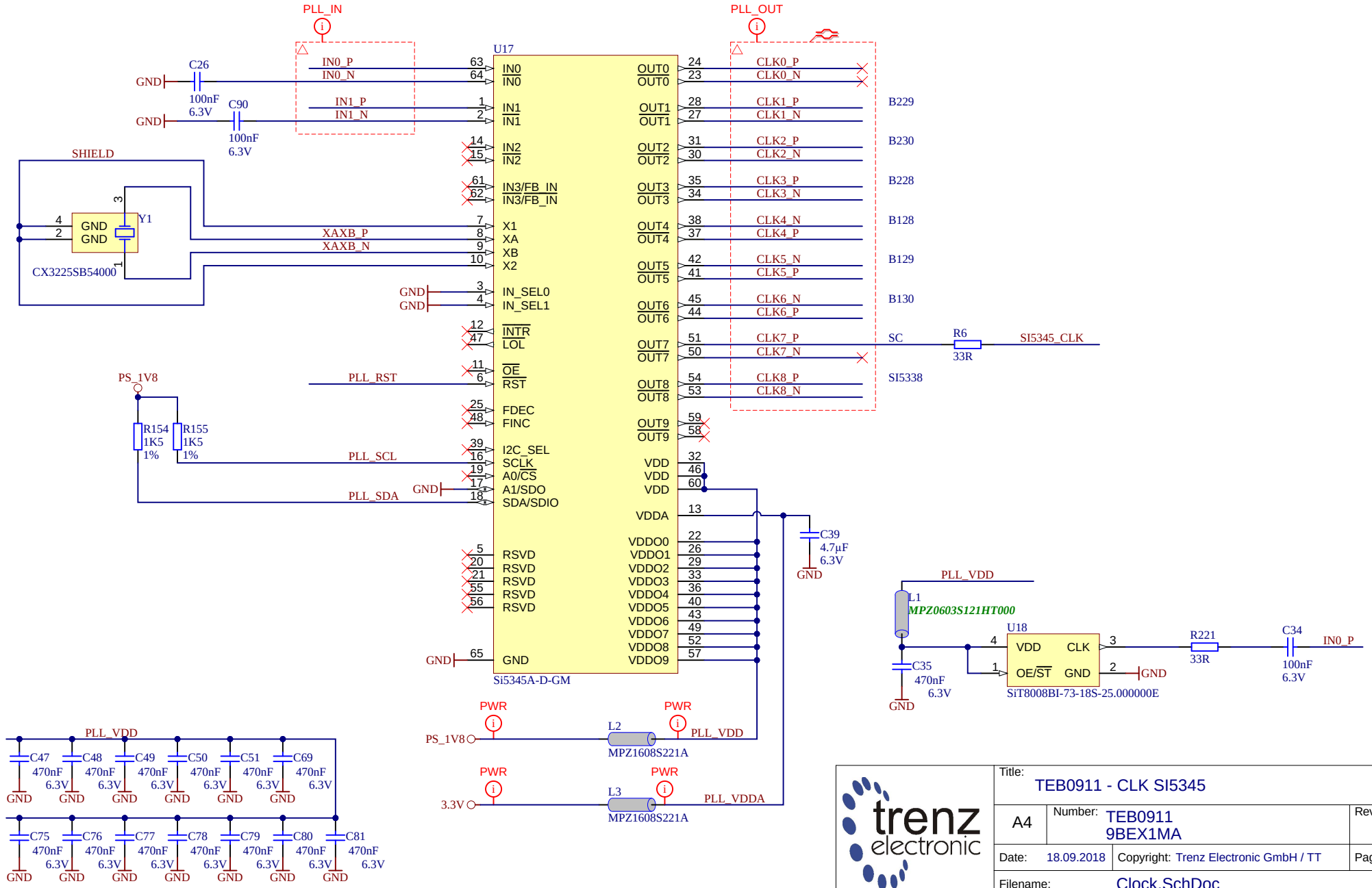

trenz electronic	Title: TEB0911 - CLK SI5345		
A4	Number: TEB0911 9BEX1MA		Rev. 04
Date: 18.09.2018	Copyright: Trenz Electronic GmbH / TT		Page36 of 58
Filename: Clock.SchDoc			

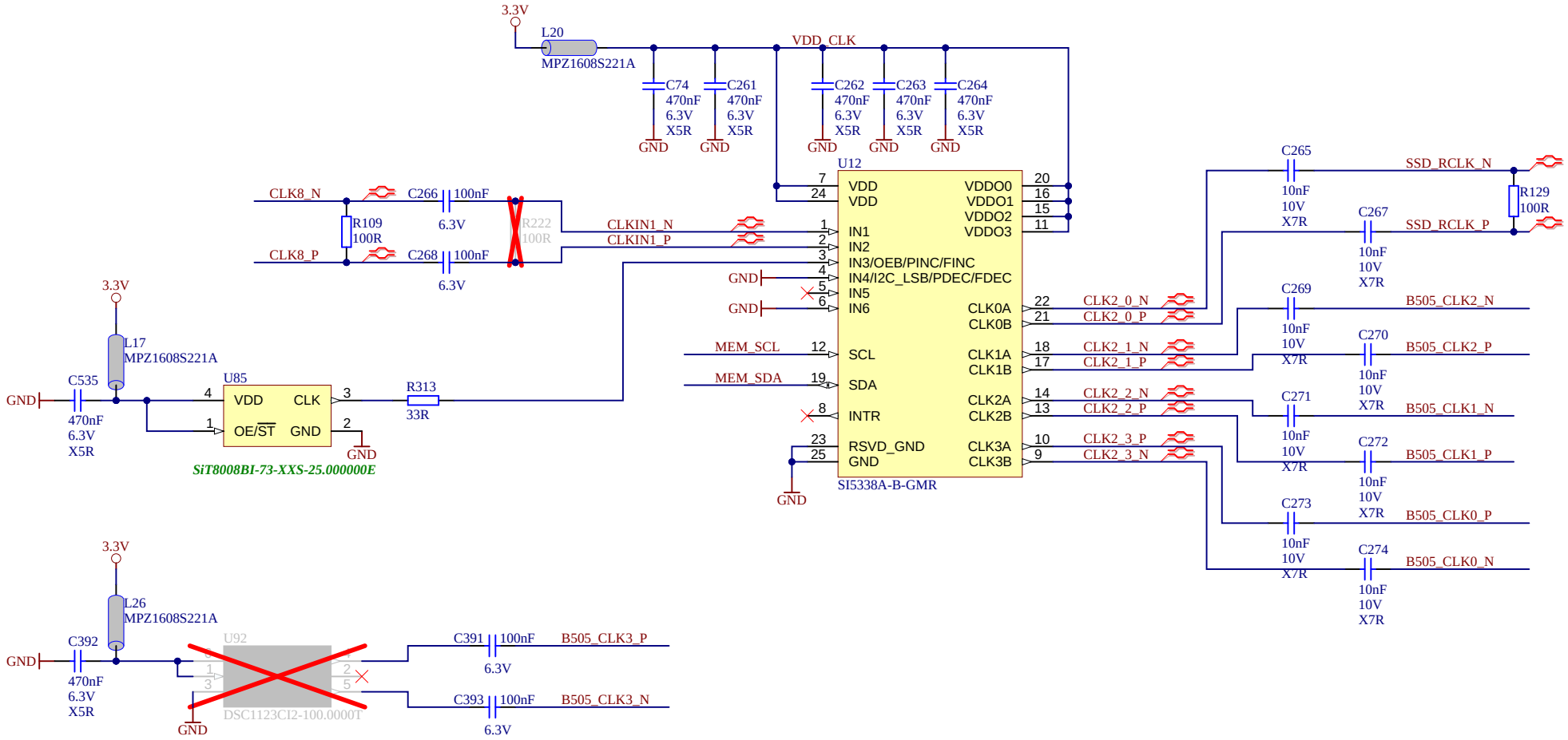

trenz electronic	Title: TEB0911 - CLK SI5338		
A4	Number: TEB0911 9BEX1MA		Rev. 04
Date: 18.09.2018	Copyright: Trenz Electronic GmbH		Page37 of 58
Filename: Clock2.SchDoc			

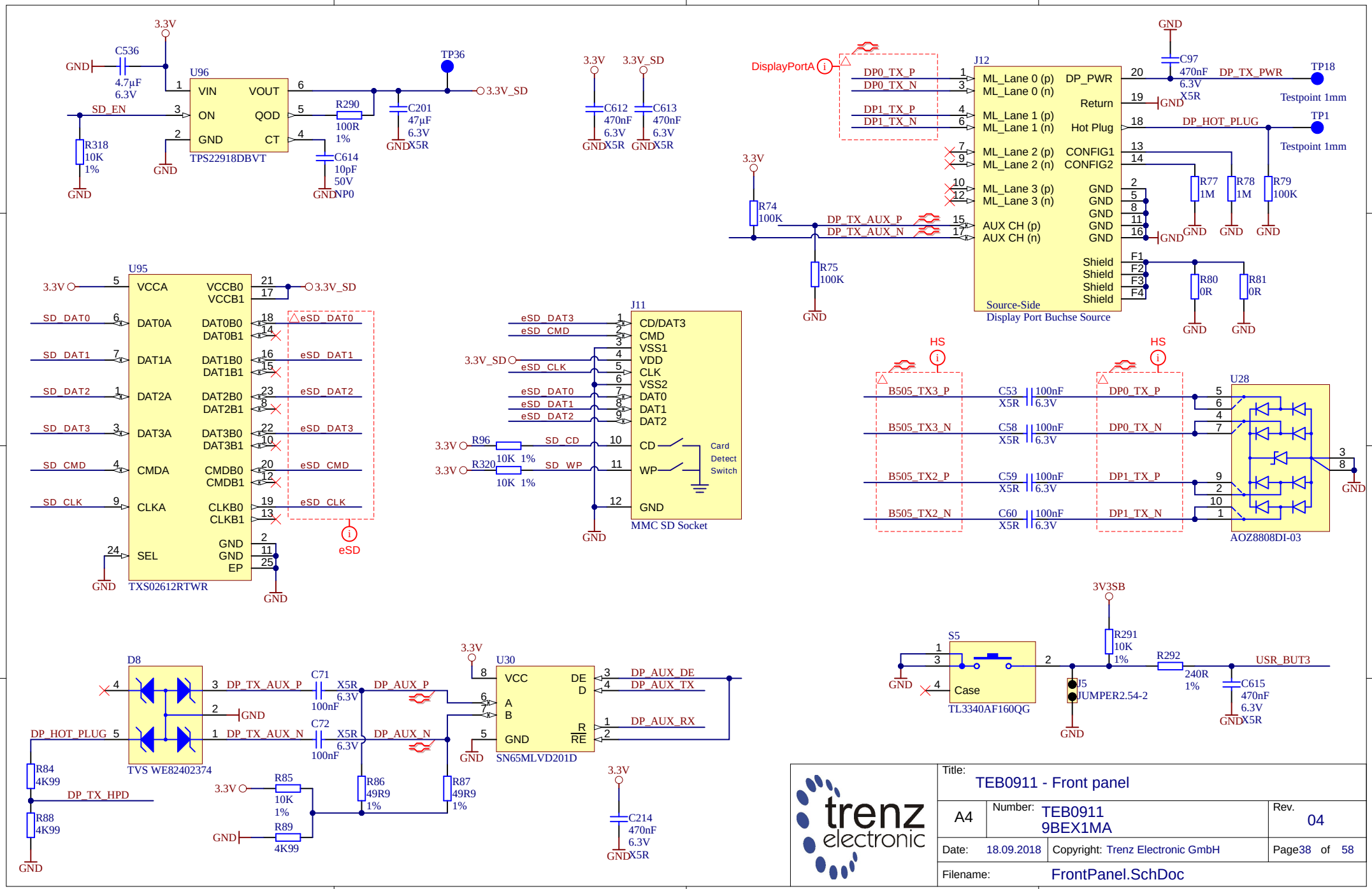
U96
TPS22918DBVT
VIN
VOUT
ON
QOD
GND
CT
SD_EN
C536
4.7µF
6.3V
R318
10K
1%
R290
100R
1%
C201
47µF
6.3V
X5R
C614
10pF
50V
NP0
TP36
3.3V_SD
C612
470nF
6.3V
X5R
C613
470nF
6.3V
X5R
DisplayPortA
J12
DP0_TX_P
DP0_TX_N
DP1_TX_P
DP1_TX_N
ML_Lane 0 (p)
ML_Lane 0 (n)
ML_Lane 1 (p)
ML_Lane 1 (n)
ML_Lane 2 (p)
ML_Lane 2 (n)
ML_Lane 3 (p)
ML_Lane 3 (n)
AUX CH (p)
AUX CH (n)
DP_PWR
Return
Hot Plug
CONFIG1
CONFIG2
Shield
Source-Side
Display Port Buchse Source
C97
470nF
6.3V
X5R
DP_TX_PWR
TP18
Testpoint 1mm
DP_HOT_PLUG
TP1
R77
1M
R78
1M
R79
100K
R74
100K
R75
100K
DP_TX_AUX_P
DP_TX_AUX_N
R80
0R
R81
0R
U95
TXS02612RTWR
VCCA
VCCB0
VCCB1
DAT0A
DAT0B0
DAT0B1
DAT1A
DAT1B0
DAT1B1
DAT2A
DAT2B0
DAT2B1
DAT3A
DAT3B0
DAT3B1
CMDA
CMDB0
CMDB1
CLKA
CLKB0
CLKB1
SEL
EP
SD_DAT0
SD_DAT1
SD_DAT2
SD_DAT3
SD_CMD
SD_CLK
eSD_DAT0
eSD_DAT1
eSD_DAT2
eSD_DAT3
eSD_CMD
eSD_CLK
eSD
J11
MMC SD Socket
CD/DAT3
CMD
VSS1
VDD
CLK
VSS2
DAT0
DAT1
DAT2
CD
WP
Card
Detect
Switch
R96
10K 1%
R320
10K 1%
SD_CD
SD_WP
HS
B505_TX3_P
B505_TX3_N
B505_TX2_P
B505_TX2_N
C53
C58
C59
C60
100nF
6.3V
X5R
DP0_TX_P
DP0_TX_N
DP1_TX_P
DP1_TX_N
U28
AOZ8808DI-03
D8
TVS WE82402374
DP_TX_AUX_P
DP_TX_AUX_N
DP_HOT_PLUG
C71
C72
100nF
X5R
6.3V
DP_AUX_P
DP_AUX_N
R84
4K99
R88
4K99
DP_TX_HPD
R85
10K
1%
R89
4K99
R86
49R9
1%
R87
49R9
1%
U30
SN65MLVD201D
VCC
A
B
GND
DE
D
R
RE
DP_AUX_DE
DP_AUX_TX
DP_AUX_RX
C214
470nF
6.3V
X5R
3V3SB
S5
TL3340AF160QG
Case
R291
10K
1%
R292
240R
1%
J5
JUMPER2.54-2
USR_BUT3
C615
470nF
6.3V
X5R
trenz
electronic
Title:
TEB0911 - Front panel
A4
Number:
TEB0911
9BEX1MA
Rev.
04
Date:
18.09.2018
Copyright:
Trenz Electronic GmbH
Page38 of 58
Filename:
FrontPanel.SchDoc

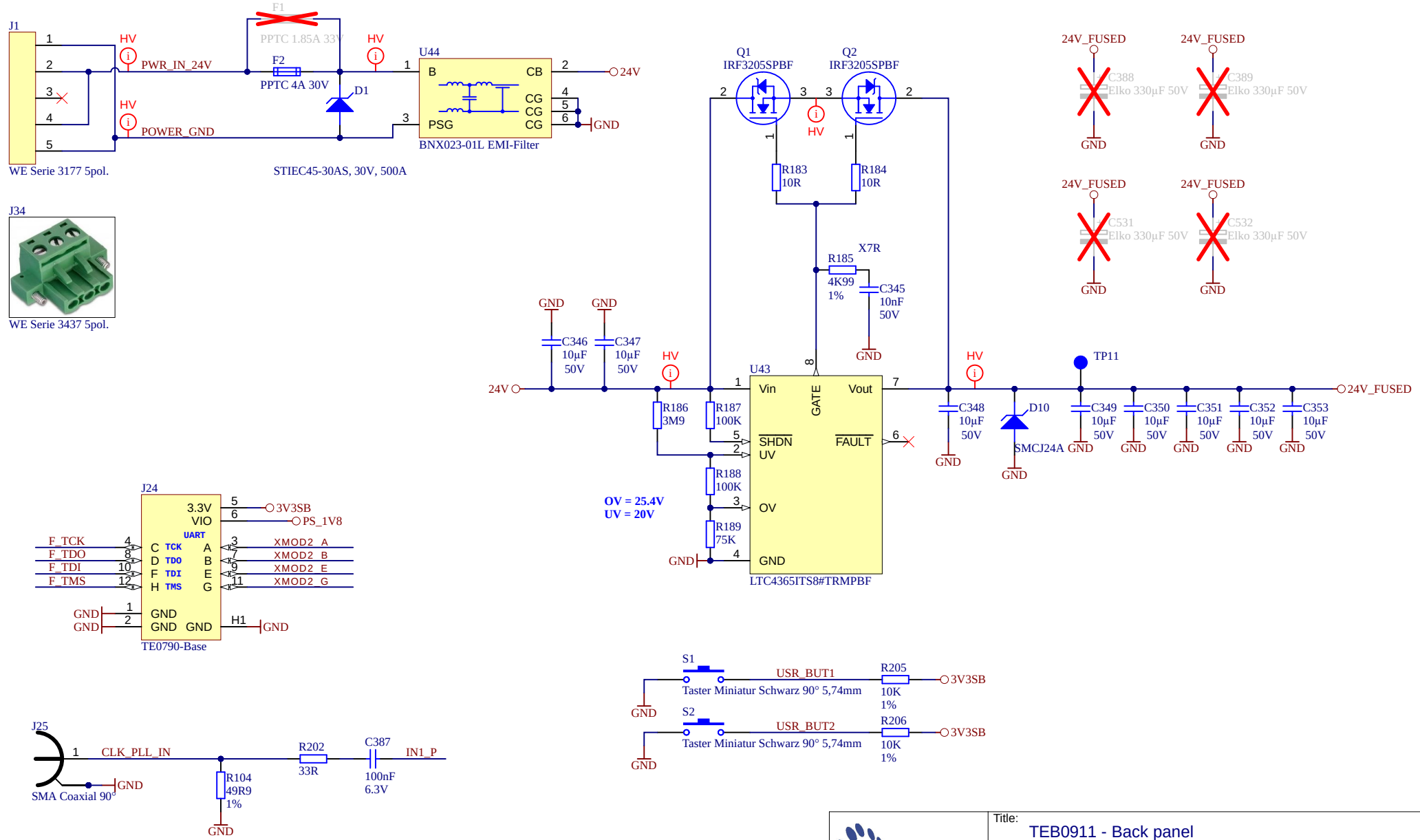

trenz electronic	Title: TEB0911 - Back panel		
A4	Number: TEB0911 9BEX1MA		Rev. 04
Date: 18.09.2018	Copyright: Trenz Electronic GmbH		Page39 of 58
Filename: BackPanel.SchDoc			

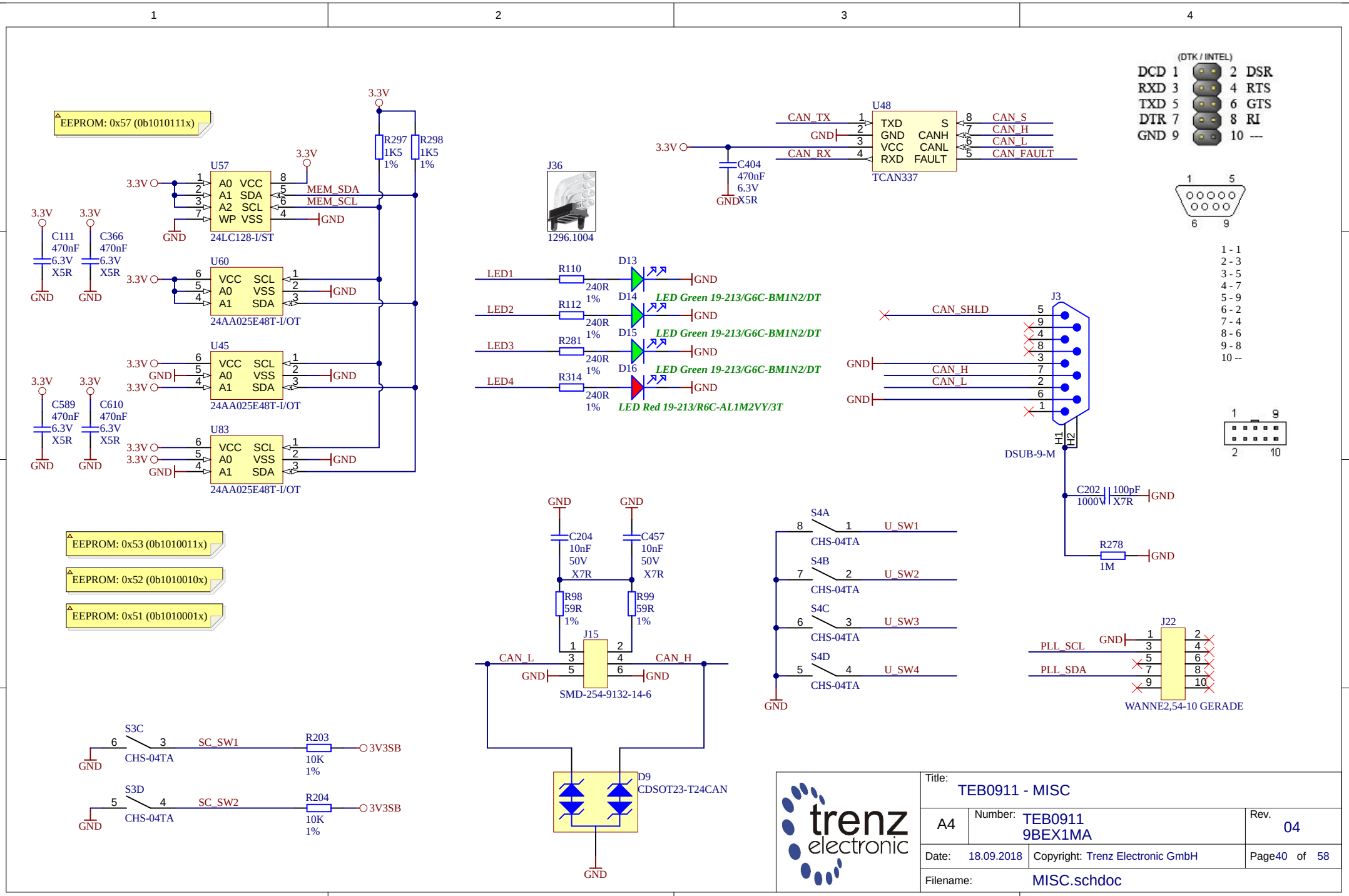
EEPROM: 0x57 (0b1010111x)
U57
24LC128-I/ST
MEM_SDA
MEM_SCL
R297 1K5 1%
R298 1K5 1%
3.3V
GND
C111 470nF 6.3V X5R
C366 470nF 6.3V X5R
U60
24AA025E48T-I/OT
U45
24AA025E48T-I/OT
C589 470nF 6.3V X5R
C610 470nF 6.3V X5R
U83
24AA025E48T-I/OT
EEPROM: 0x53 (0b1010011x)
EEPROM: 0x52 (0b1010010x)
EEPROM: 0x51 (0b1010001x)
S3C
CHS-04TA
SC_SW1
R203 10K 1%
3V3SB
S3D
SC_SW2
R204 10K 1%
J36
1296.1004
U48
TCAN337
CAN_TX
CAN_RX
CAN_S
CAN_H
CAN_L
CAN_FAULT
C404 470nF 6.3V X5R
LED1
LED2
LED3
LED4
R110
R112
R281
R314
240R 1%
D13
D14
D15
D16
LED Green 19-213/G6C-BM1N2/DT
LED Red 19-213/R6C-AL1M2VY/3T
C204 10nF 50V X7R
C457 10nF 50V X7R
R98 59R 1%
R99 59R 1%
J15
SMD-254-9132-14-6
D9
CDSOT23-T24CAN
S4A
S4B
S4C
S4D
CHS-04TA
U_SW1
U_SW2
U_SW3
U_SW4
(DTK / INTEL)
DCD 1
RXD 3
TXD 5
DTR 7
GND 9
2 DSR
4 RTS
6 GTS
8 RI
10 ---
J3
DSUB-9-M
CAN_SHLD
H1
H2
C202 1000V 100pF X7R
R278 1M
1 - 1
2 - 3
3 - 5
4 - 7
5 - 9
6 - 2
7 - 4
8 - 6
9 - 8
10 --
J22
WANNE2,54-10 GERADE
PLL_SCL
PLL_SDA
trenz electronic
Title:
TEB0911 - MISC
A4
Number:
TEB0911
9BEX1MA
Rev.
04
Date:
18.09.2018
Copyright: Trenz Electronic GmbH
Page40 of 58
Filename:
MISC.schdoc

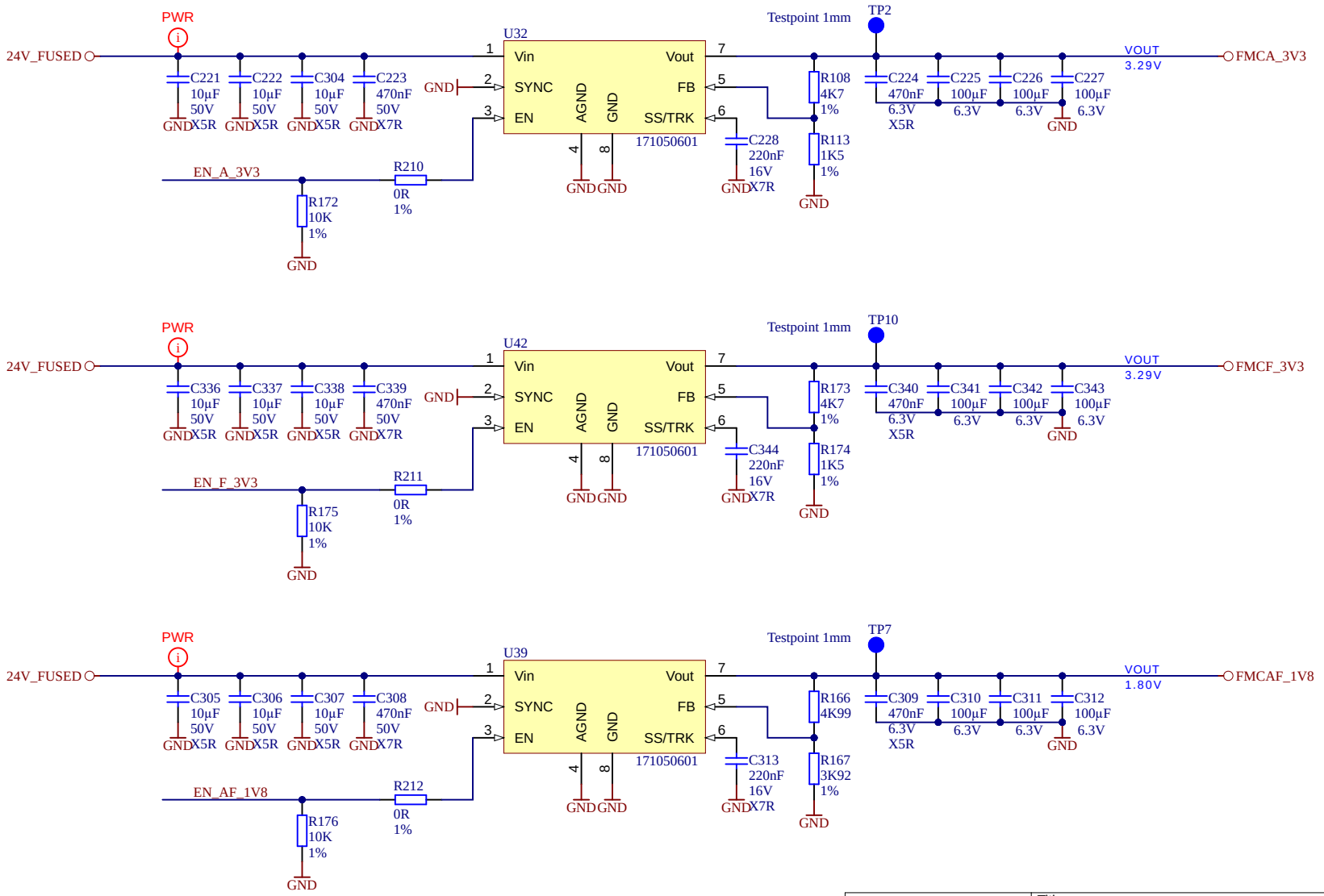

trenz electronic	Title: TEB0911 - POWER		
A4	Number: TEB0911 9BEX1MA		Rev. 04
Date: 18.09.2018	Copyright: Trenz Electronic GmbH		Page41 of 58
Filename: POWER_1.schdoc			

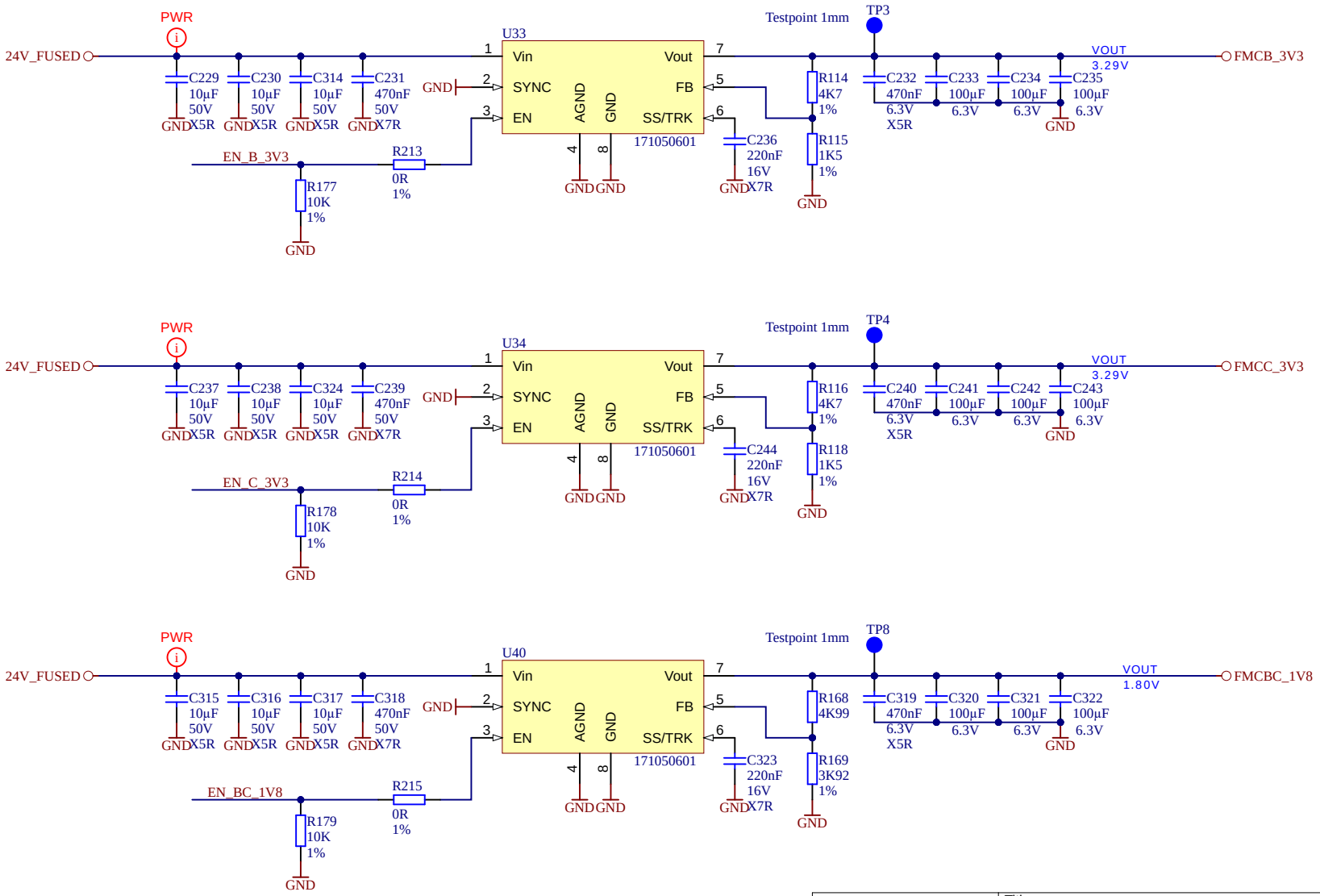

trenz electronic	Title: TEB0911 - POWER		
A4	Number: TEB0911 9BEX1MA		Rev. 04
Date: 18.09.2018	Copyright: Trenz Electronic GmbH		Page42 of 58
Filename: POWER_2.schdoc			

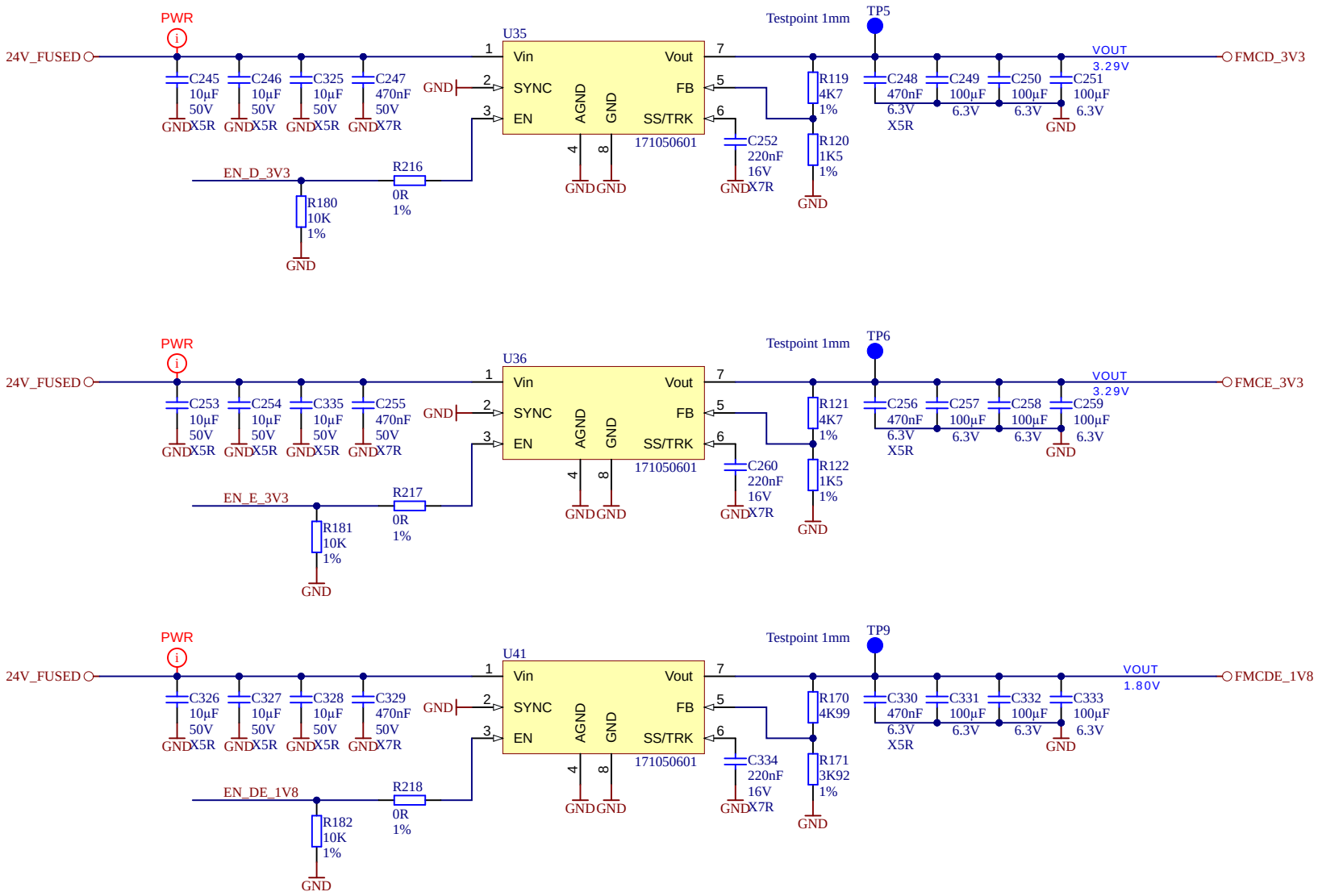

trenz electronic	Title: TEB0911 - POWER		
A4	Number: TEB0911 9BEX1MA		Rev. 04
Date: 18.09.2018	Copyright: Trenz Electronic GmbH		Page43 of 58
Filename: POWER_3.schdoc			

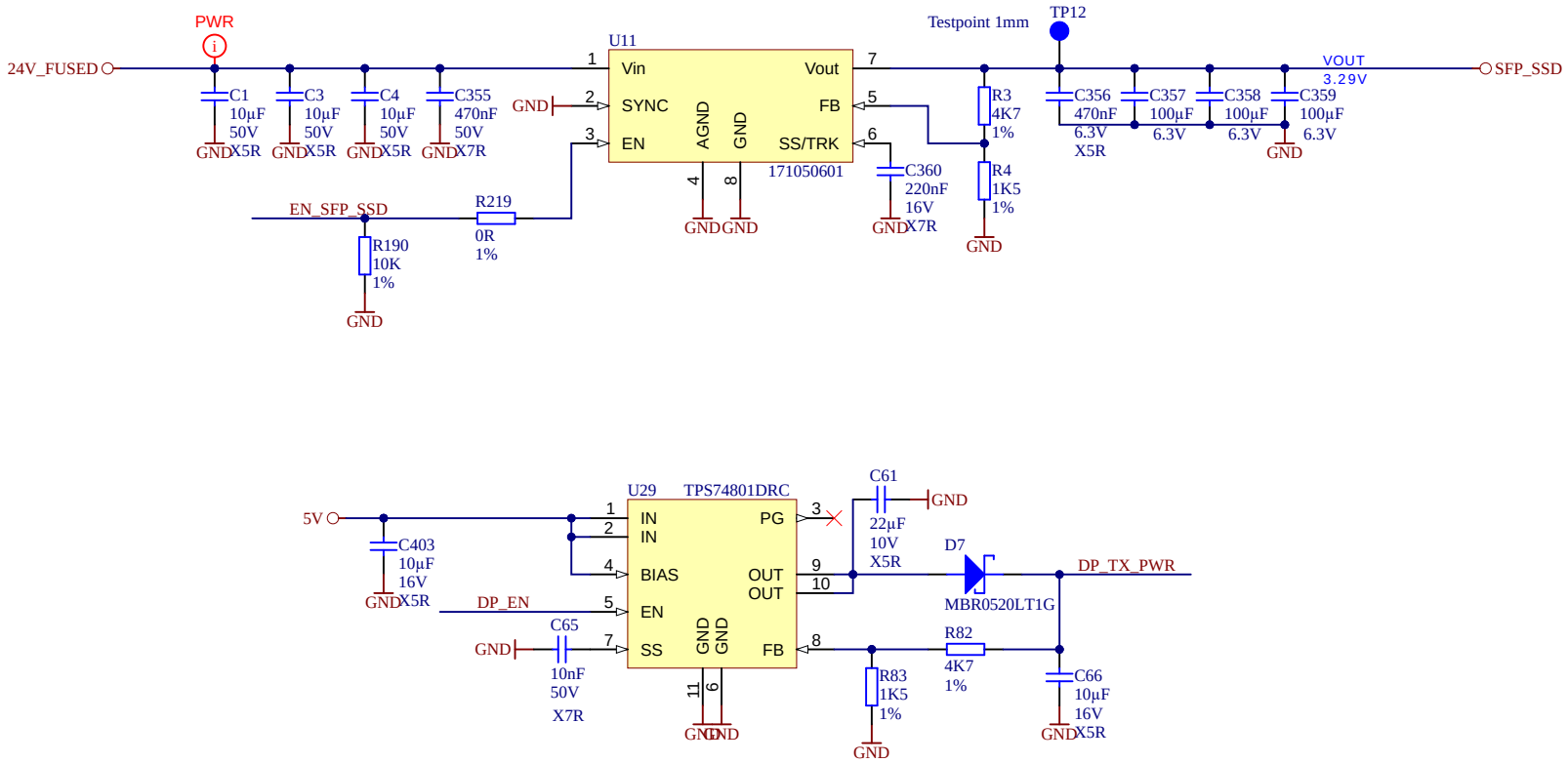

trenz electronic	Title: TEB0911 - POWER		
A4	Number: TEB0911 9BEX1MA		Rev. 04
Date: 18.09.2018	Copyright: Trenz Electronic GmbH		Page44 of 58
Filename: POWER_4.schdoc			

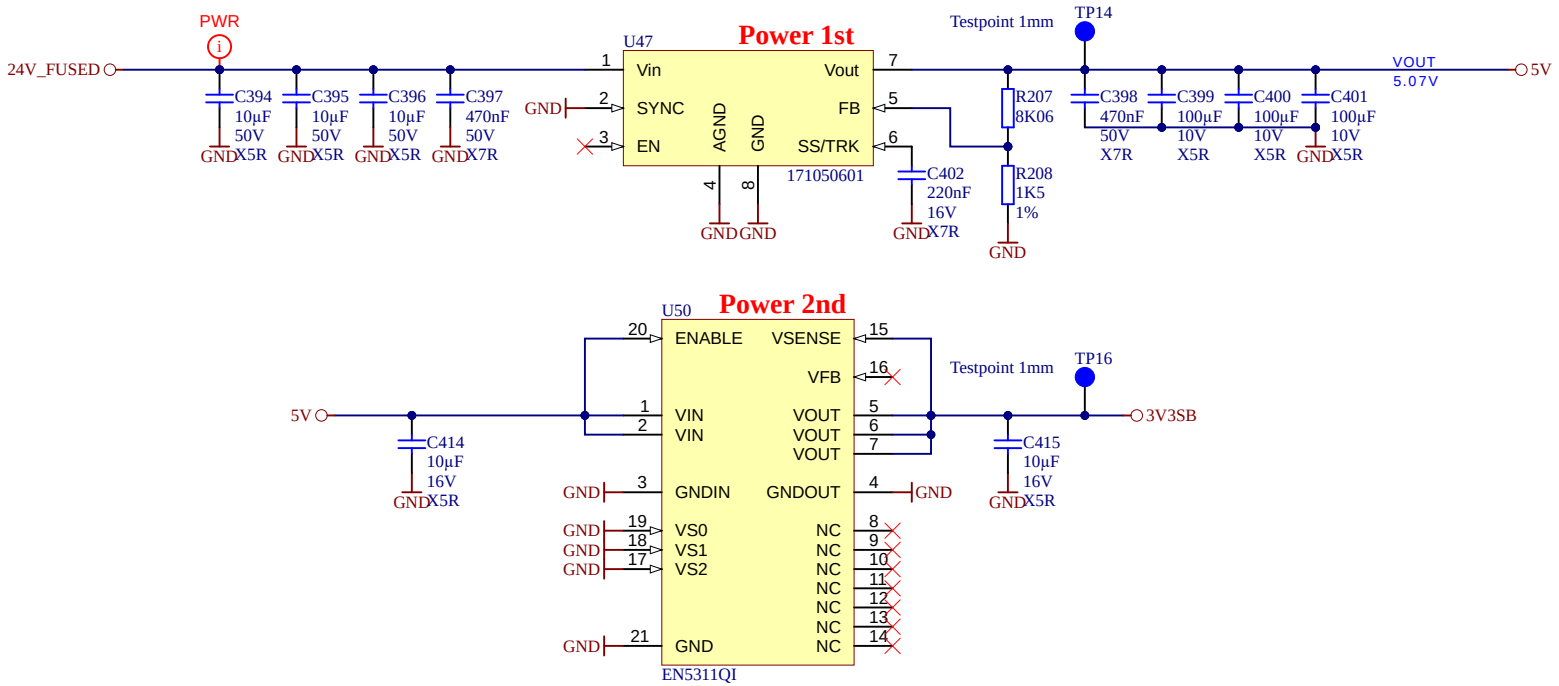

trenz electronic	Title: TEB0911 - POWER		
A4	Number: TEB0911 9BEX1MA		Rev. 04
Date: 18.09.2018	Copyright: Trenz Electronic GmbH		Page45 of 58
Filename: POWER_5.schdoc			

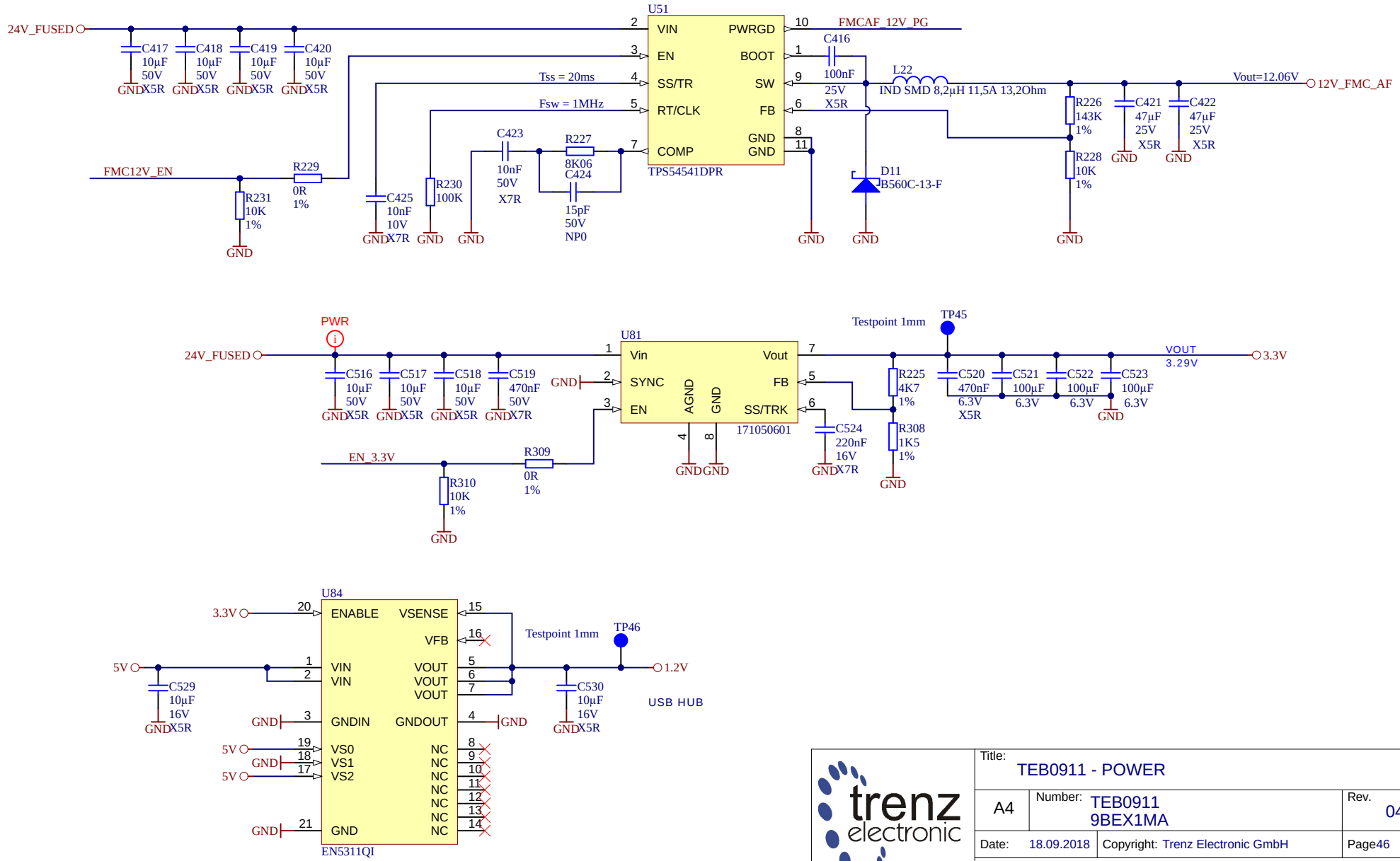

trenz electronic	Title: TEB0911 - POWER		
A4	Number: TEB0911 9BEX1MA		Rev. 04
Date: 18.09.2018	Copyright: Trenz Electronic GmbH		Page46 of 58
Filename: POWER_6.SchDoc			

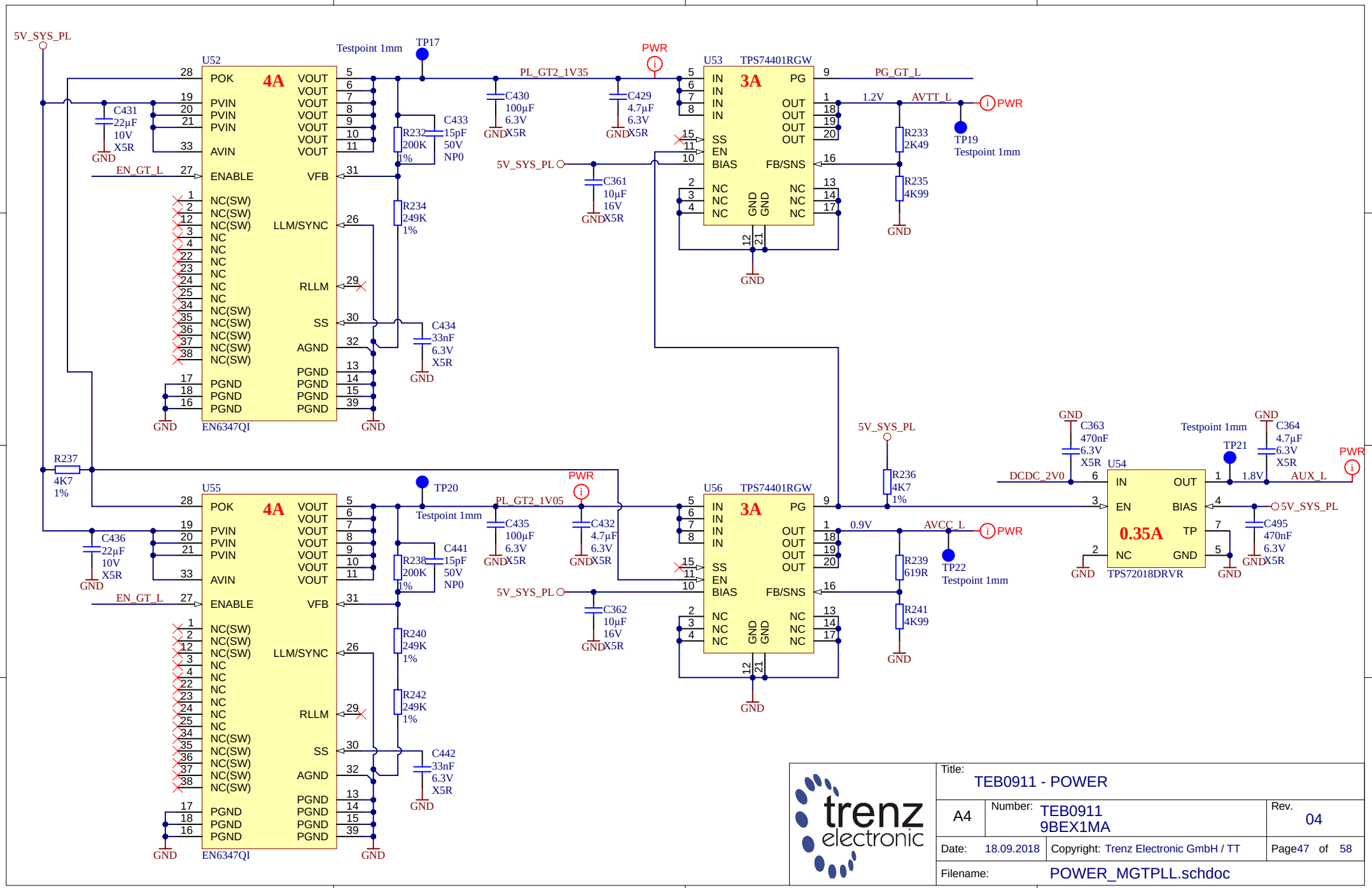
5V_SYS_PL
U52
4A
POK
PVIN
AVIN
ENABLE
NC(SW)
NC
LLM/SYNC
RLLM
SS
AGND
PGND
VOUT
VFB
EN6347QI
EN_GT_L
C431
22µF
10V
X5R
GND
Testpoint 1mm
TP17
R232
200K
1%
C433
15pF
50V
NP0
R234
249K
1%
C434
33nF
6.3V
X5R
PL_GT2_1V35
C430
100µF
6.3V
X5R
C429
4.7µF
6.3V
X5R
PWR
U53
TPS74401RGW
3A
IN
SS
EN
BIAS
NC
GND
OUT
PG
FB/SNS
C361
10µF
16V
X5R
PG_GT_L
1.2V
AVTT_L
R233
2K49
R235
4K99
TP19
Testpoint 1mm
R237
4K7
1%
U55
TP20
PL_GT2_1V05
C435
100µF
6.3V
X5R
C432
4.7µF
6.3V
X5R
C436
22µF
10V
X5R
R238
200K
1%
C441
15pF
50V
NP0
R240
249K
1%
R242
249K
1%
C442
33nF
6.3V
X5R
U56
TPS74401RGW
C362
10µF
16V
X5R
0.9V
AVCC_L
R239
619R
R241
4K99
TP22
Testpoint 1mm
R236
4K7
1%
DCDC_2V0
C363
470nF
6.3V
X5R
U54
0.35A
TPS72018DRVR
TP21
1.8V
AUX_L
C364
4.7µF
6.3V
X5R
C495
470nF
6.3V
X5R
trenz electronic
Title:
TEB0911 - POWER
A4
Number:
TEB0911
9BEX1MA
Rev.
04
Date:
18.09.2018
Copyright: Trenz Electronic GmbH / TT
Page47 of 58
Filename:
POWER_MGTPLL.schdoc

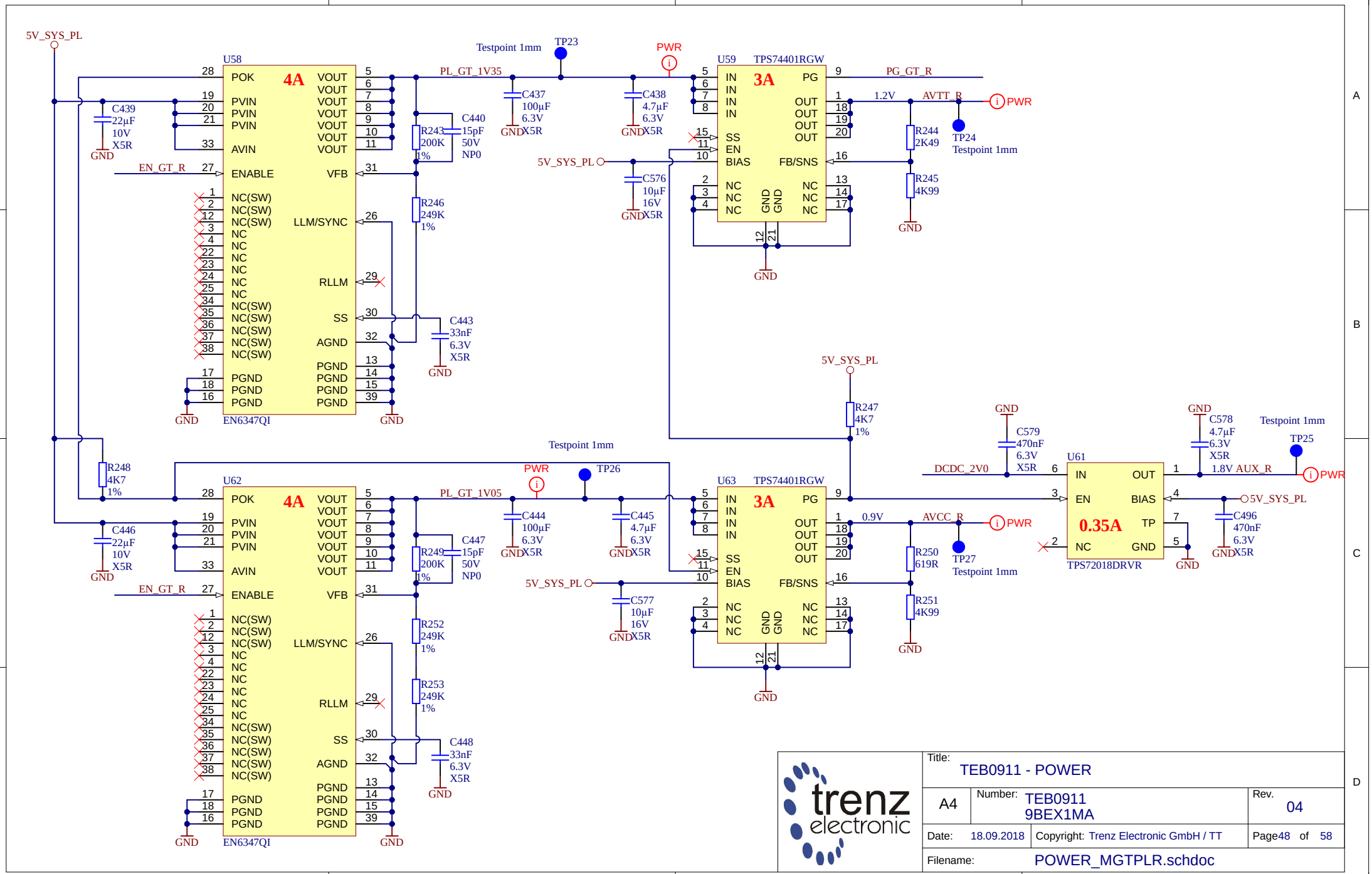

trenz electronic	Title: TEB0911 - POWER		
A4	Number: TEB0911 9BEX1MA		Rev. 04
Date: 18.09.2018	Copyright: Trenz Electronic GmbH / TT		Page48 of 58
Filename: POWER_MGTPLR.schdoc			

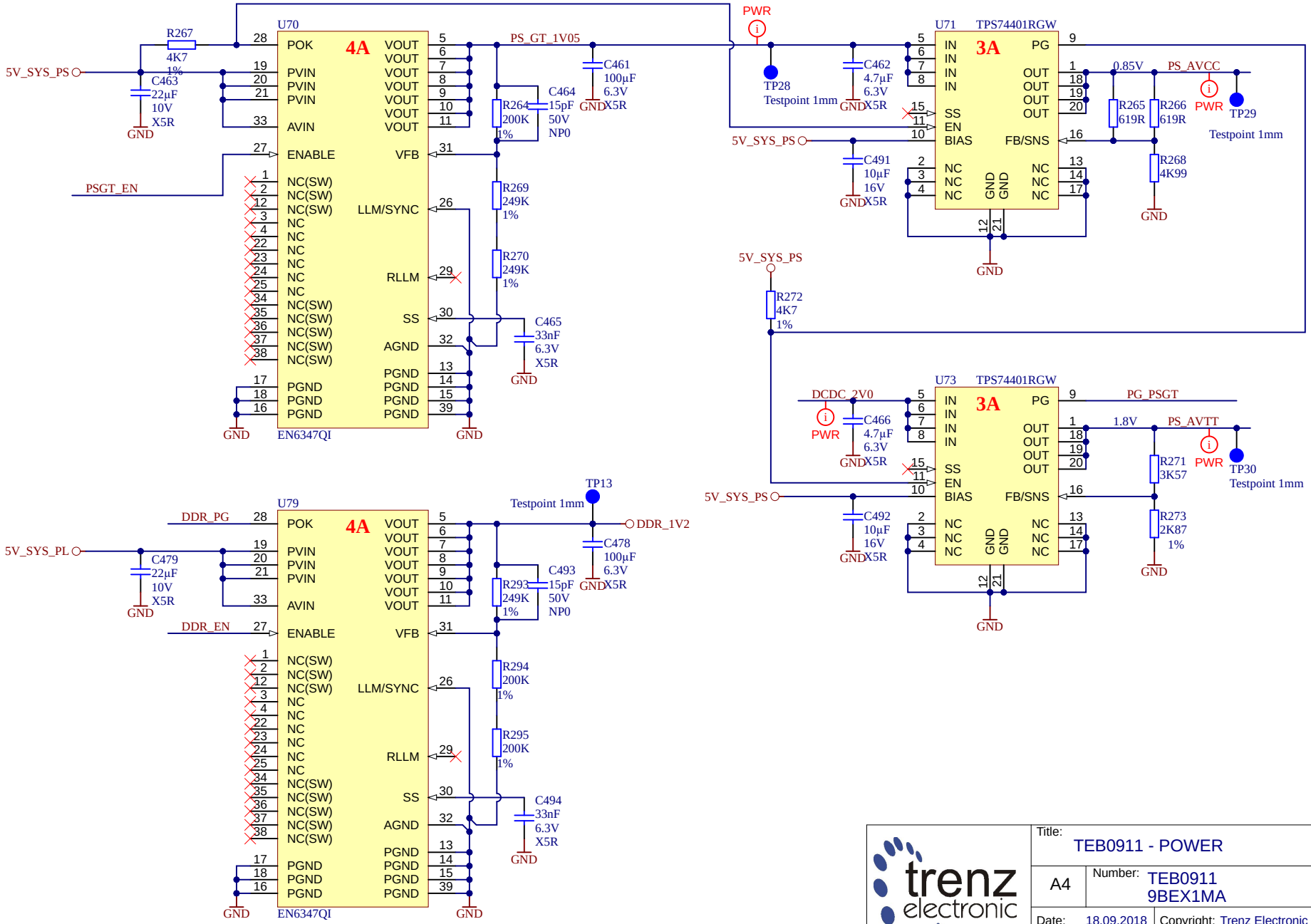

trenz electronic	Title: TEB0911 - POWER		
A4	Number: TEB0911 9BEX1MA		Rev. 04
Date: 18.09.2018	Copyright: Trenz Electronic GmbH / TT		Page49 of 58
Filename: POWER_MGTPS.schdoc			

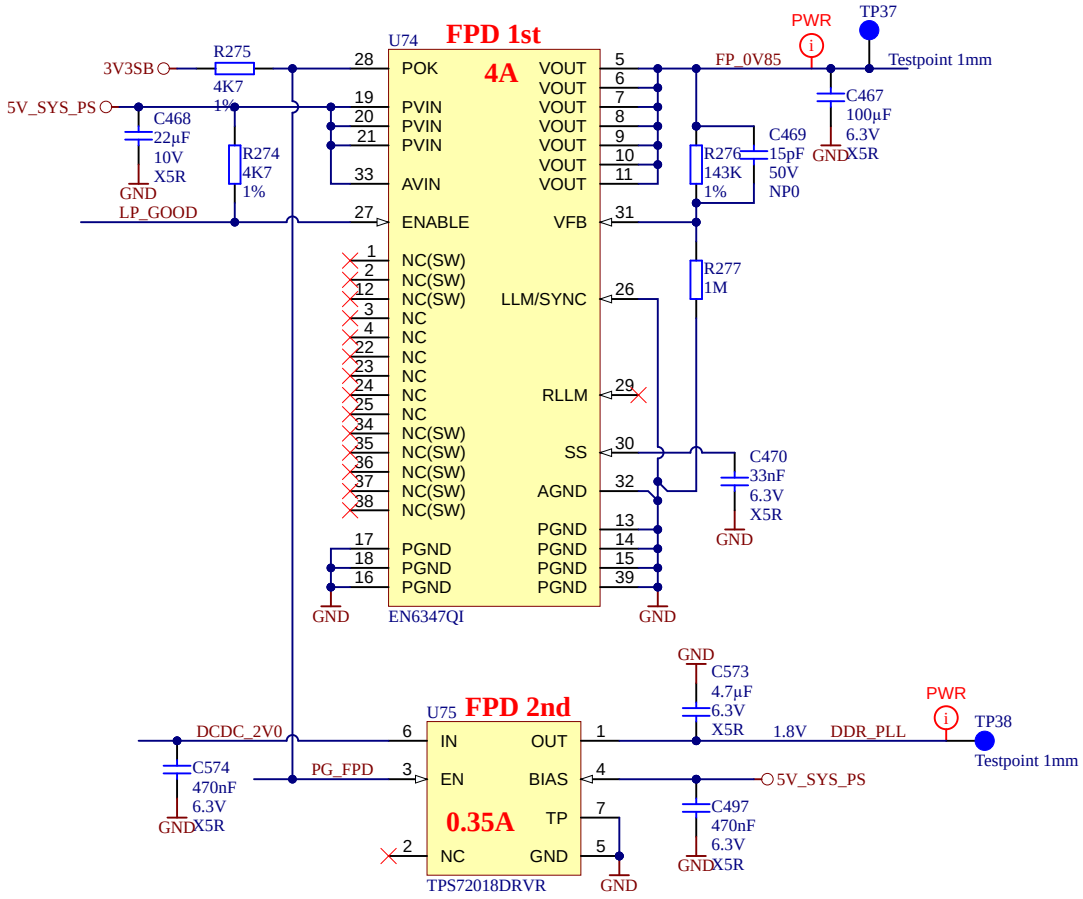

trenz electronic	Title: TEB0911 - POWER		
A4	Number: TEB0911 9BEX1MA		Rev. 04
Date: 18.09.2018	Copyright: Trenz Electronic GmbH / TT		Page50 of 58
Filename: POWER_PSFP.schdoc			

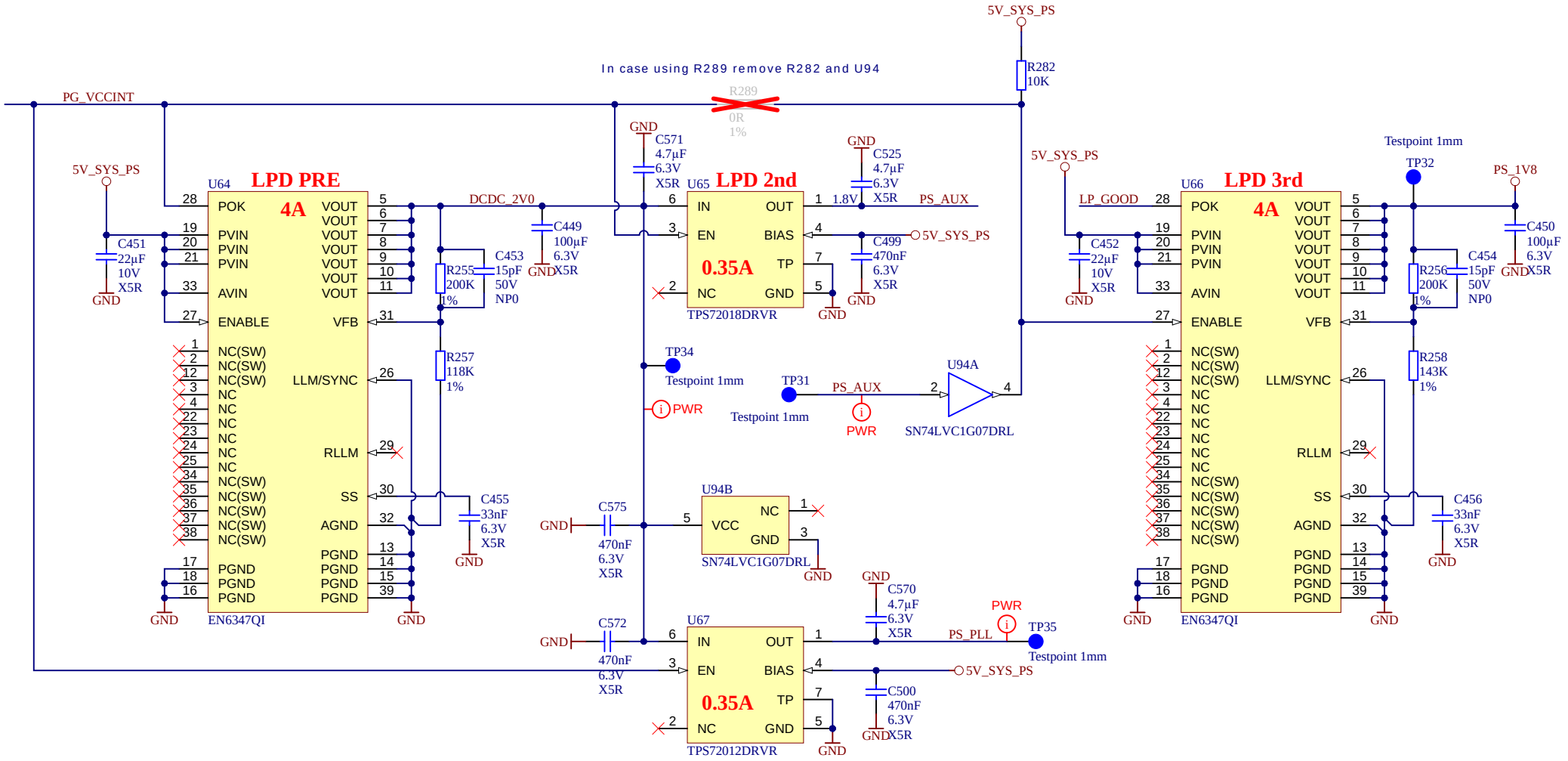

trenz electronic	Title: TEB0911 - POWER		
A4	Number: TEB0911 9BEX1MA		Rev. 04
Date: 18.09.2018	Copyright: Trenz Electronic GmbH / TT		Page51 of 58
Filename: POWER_PSLP.schdoc			

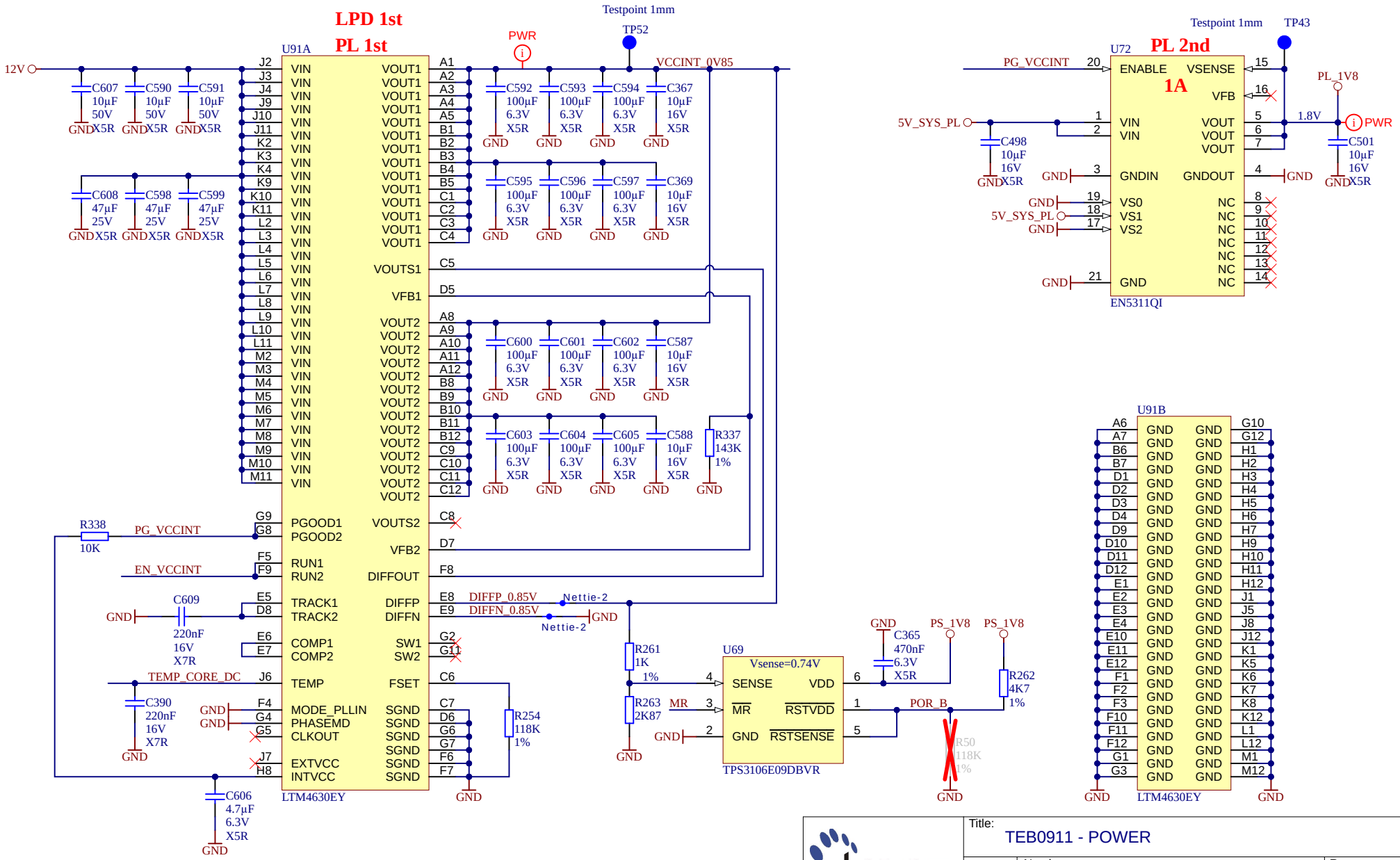
LPD 1st
PL 1st
U91A
LTM4630EY
12V
C607 10µF 50V X5R
C590 10µF 50V X5R
C591 10µF 50V X5R
C608 47µF 25V X5R
C598 47µF 25V X5R
C599 47µF 25V X5R
PWR
Testpoint 1mm
TP52
VCCINT_0V85
C592 100µF 6.3V X5R
C593 100µF 6.3V X5R
C594 100µF 6.3V X5R
C367 10µF 16V X5R
C595 100µF 6.3V X5R
C596 100µF 6.3V X5R
C597 100µF 6.3V X5R
C369 10µF 16V X5R
C600 100µF 6.3V X5R
C601 100µF 6.3V X5R
C602 100µF 6.3V X5R
C587 10µF 16V X5R
C603 100µF 6.3V X5R
C604 100µF 6.3V X5R
C605 100µF 6.3V X5R
C588 10µF 16V X5R
R337 143K 1%
R338 10K
PG_VCCINT
EN_VCCINT
C609 220nF 16V X7R
TEMP_CORE_DC
C390 220nF 16V X7R
C606 4.7µF 6.3V X5R
DIFFP_0.85V
DIFFN_0.85V
Nettie-2
R261 1K 1%
R263 2K87
MR
U69
Vsense=0.74V
SENSE
VDD
MR
RSTVDD
GND
RSTSENSE
TPS3106E09DBVR
C365 470nF 6.3V X5R
PS_1V8
POR_B
R262 4K7 1%
R50 118K 1%
R254 118K 1%
U72
PL 2nd
1A
EN5311QI
PG_VCCINT
5V_SYS_PL
C498 10µF 16V X5R
Testpoint 1mm
TP43
PL_1V8
1.8V
C501 10µF 16V X5R
ENABLE
VSENSE
VFB
VIN
VOUT
GNDIN
GNDOUT
VS0
VS1
VS2
NC
U91B
LTM4630EY
trenz electronic
Title:
TEB0911 - POWER
A4
Number:
TEB0911
9BEX1MA
Rev.
04
Date:
18.09.2018
Copyright: Trenz Electronic GmbH
Page52 of 58
Filename:
PWR_CORE.SchDoc

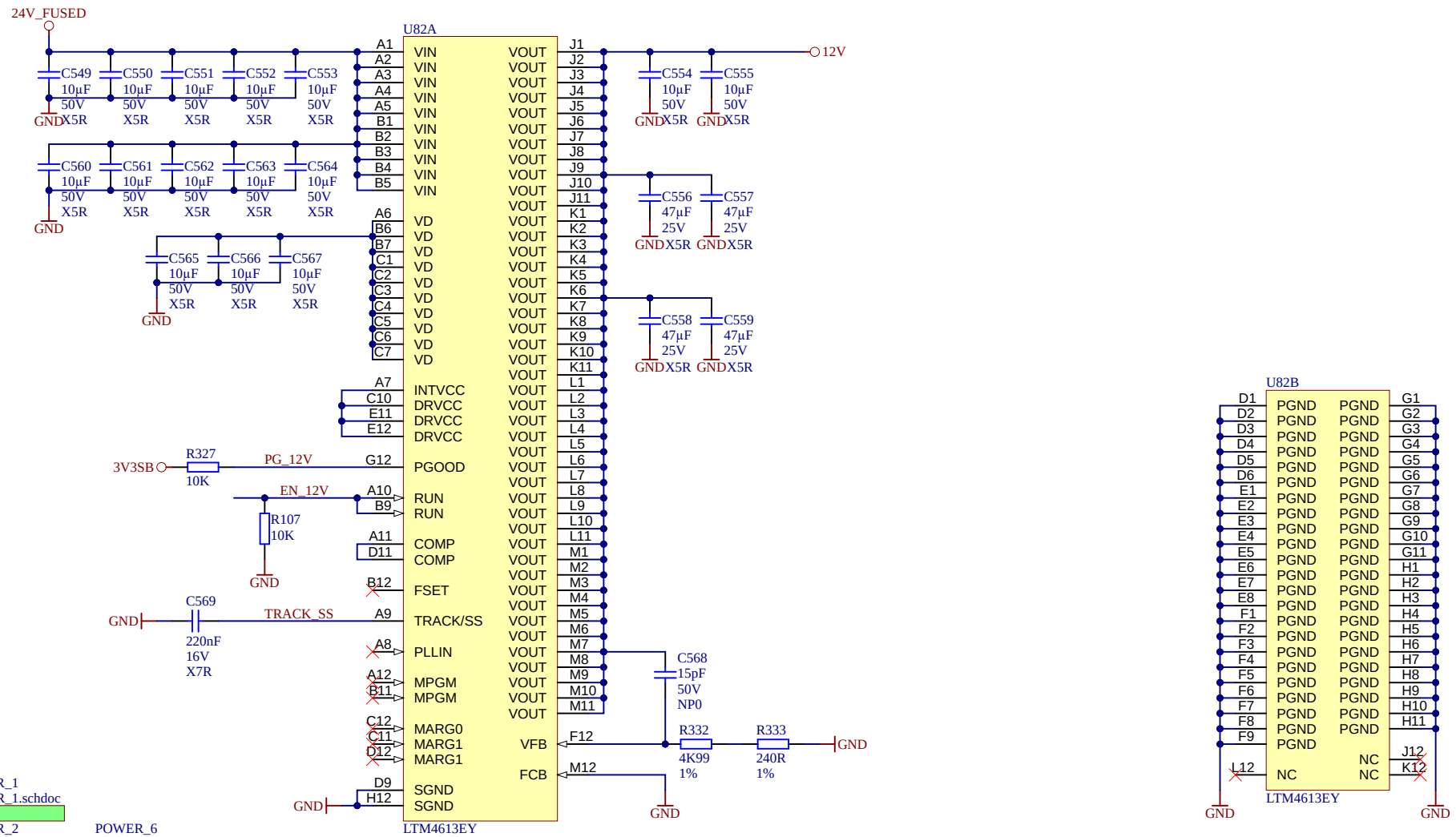

trenz electronic	Title: TEB0911 - POWER		
A4	Number: TEB0911 9BEX1MA		Rev. 04
Date: 18.09.2018	Copyright: Trenz Electronic GmbH		Page53 of 58
Filename: PWR_IN.SchDoc			

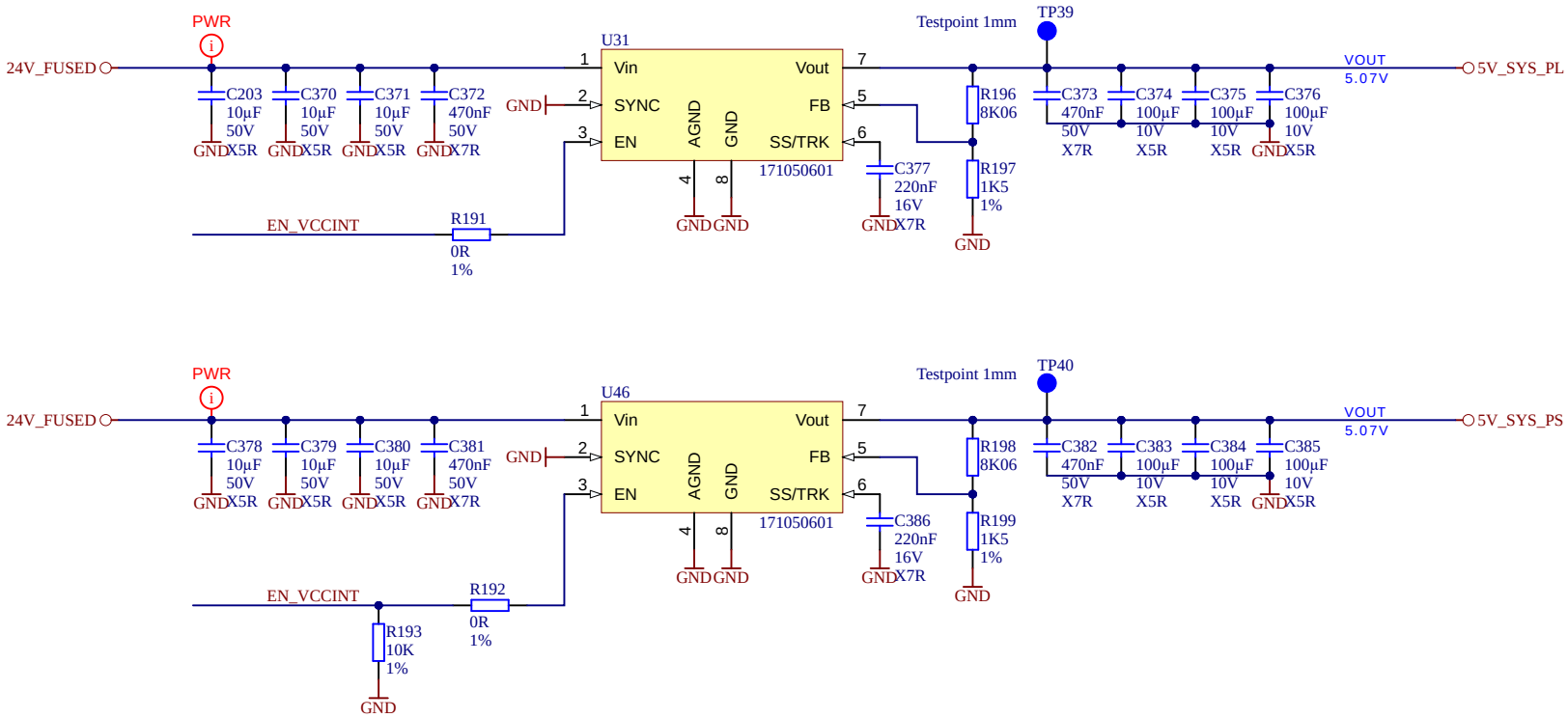

POWER_MGTPS
POWER_MGTPS.schdoc
POWER_MGTPLR
POWER_MGTPLR.schdoc
POWER_MGTPLL
POWER_MGTPLL.schdoc
POWER_PSFP
POWER_PSFP.schdoc
POWER_PSLP
POWER_PSLP.schdoc

trenz electronic	Title: TEB0911 - POWER		
A4	Number: TEB0911 9BEX1MA		Rev. 04
Date: 18.09.2018	Copyright: Trenz Electronic GmbH		Page54 of 58
Filename: PWR_SYS.SchDoc			

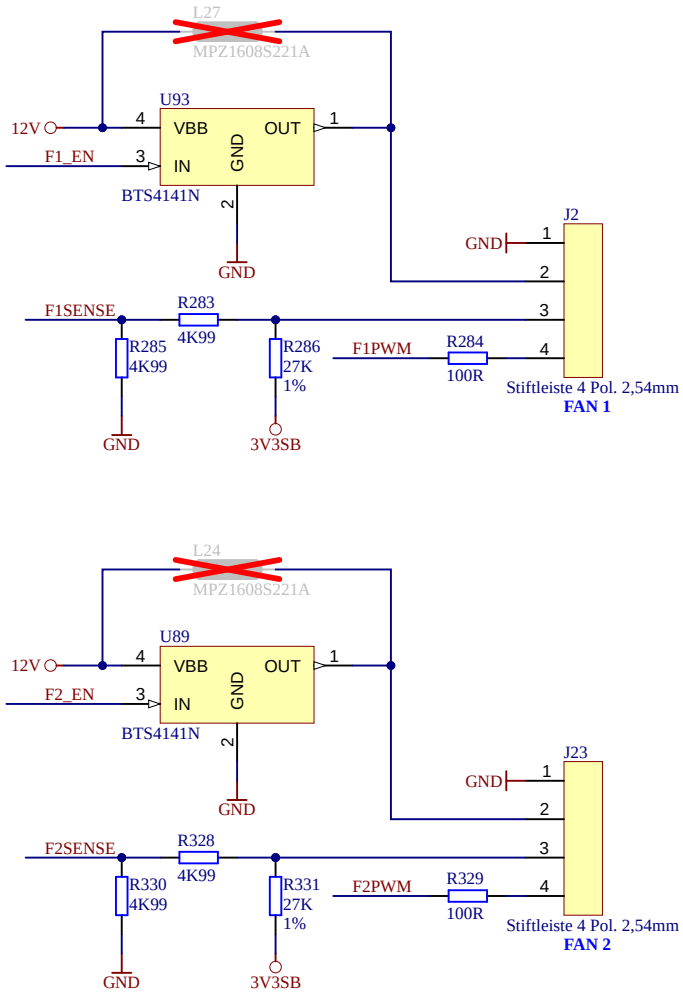

trenz electronic	Title: TEB0911 - FAN connectors		
A4	Number: TEB0911 9BEX1MA		Rev. 04
Date: 18.09.2018	Copyright: Trenz Electronic GmbH		Page55 of 58
Filename: FAN_CON.schdoc			

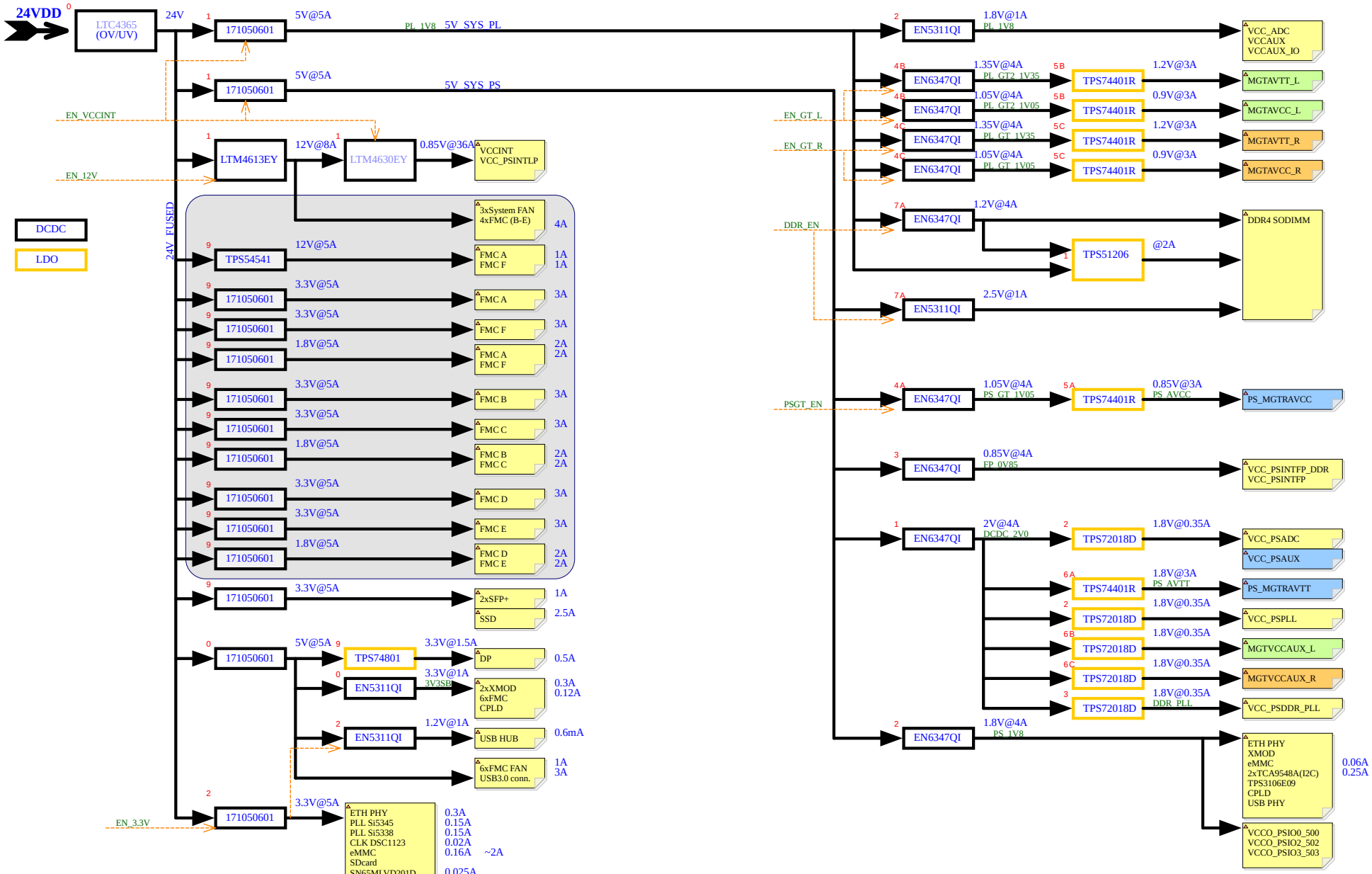

trenz electronic

Title: TEB0911 - POWER OVERVIEW		
A4	Nummer: TEB0911	Rev. 04
Datum: 18.09.2018	Zeichner: Trenz Electronic GmbH	Blatt 56 von 58
Filename: Power_overview.SchDoc		

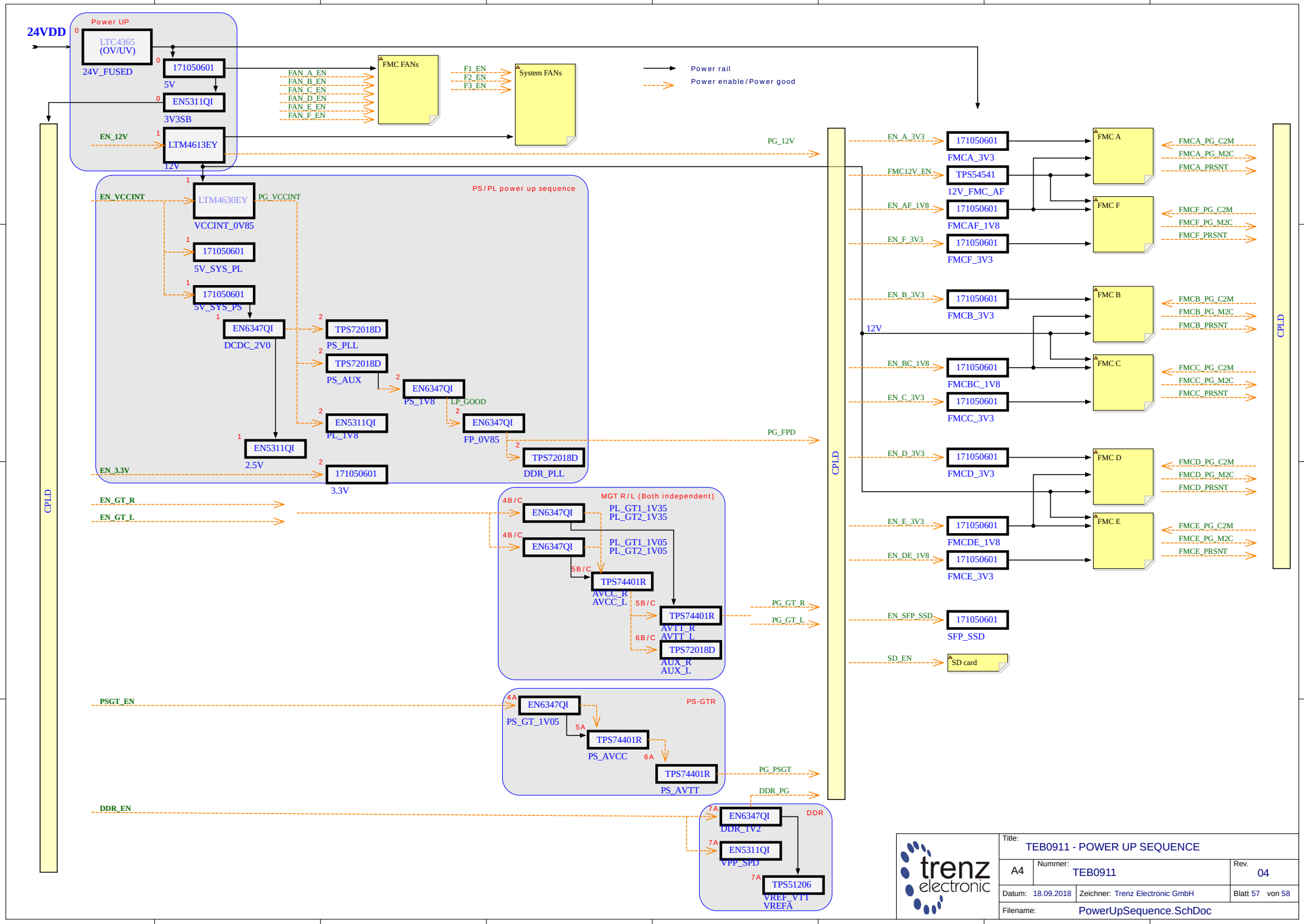

trenz electronic

Title:	TEB0911 - POWER UP SEQUENCE		
A4	Nummer: TEB0911		Rev. 04
Datum: 18.09.2018	Zeichner: Trenz Electronic GmbH		Blatt 57 von 58
Filename:	PowerUpSequence.SchDoc		

REV02:

1. 2 CPLDs replaced with LCMXO2-7000HC-4FG484C (U27)
2. Single SFP connector removed. MGT lanes B129_TX/RX_1 connected to FMC F
3. DCDC U45 (power supply of 2xSFP and 1xSFP connectors) removed. 2xSFP powered by U11.
4. HDMI: lane B505_TX2 connected to DP1_TX and lane B505_TX3 to DP0_TX.
5. Supervisor U69 TPS3106E33 replaced with TPS3106E09
6. U17 (Si5345): IN_SEL0/1 disconnected from CPLD and connected to GND
7. Added new clock source U87 (SiT8008AI-73-XXS-25.000000E). Connected to CPLD. Not fitted
8. I2C pull-ups R154/R155: changed from 4.7k to 1.5kOhm
9. FAN: R285, R330, R260 changed to 27K (F*SENSE)
10. Added fuse F2 (4A). Fuse F1 (1.85A) "not fitted"
11. C354 (PWR_IN_24V/GND) deleted
12. Removed clock loop-back OUT9P/N - IN2P/N (U17, SI5345)
13. OUT7 (P) of U17 (clock source SI5345) connected to CPLD U27 Bank 5.
14. Signal SD Card detect SD_CD connected to CPLD, MIO45 connected to CPLD
15. Signals FMC*_PG_C2M(M2C) pulled-up to 3V3SB (was FMC*_3V3)
16. CLK_OUT U15 (USB PHY), serial resistor value R13 changed from 33 to 0 Ohm
17. EN5311QI: Cout value changed from 22uF to 10uF
18. BOM optimization
19. Added connections from CPLD to FMC A and F (x_LA06_SC - x_LA33_SC)
20. Net EN_VCCINT connected also to DCDC U31 (5V_SYS_PL) and U46 (5V_SYS_PS)
21. Added 2 2kb EEPROM (U45/U43)
22. Added power-up sequencing
23. MIO6 connected to CPLD
24. Signals EN_SFP was renamed to EN_SFP_SSD, 12V_FMC was renamed to 12V_FMC_AF, FMC12V_PG to FMCAF_12V_PG
25. Nets names F_LA02/03/04 was swapped.

REV03:

1. Signals C_LA27_P/N swapped: C_LA27_P connected to pin R10 (IO_L11P_T1U_N8_GC_67), C_LA27_N connected to R9 (IO_L11N_T1U_N9_GC_67) of U1 (XCZU9EG-1FFVB1156)

REV03a (17.11.2017):

1. Flash N25Q256A11E1240E changed to N25Q512A11G1240E.

REV04:

1. Added SDIO level translator TXS02612RTWR (U95) and 33Ω series resistors on SDIO lines from FPGA side.
2. Added user button S5 and jumper J5 (connected to U27 pin W17).
3. New FAN switches U76-78/U97-99: BTS4141N.
4. New FANs: AFB04512MA. Was added an option to use 5V or 12V (default) power rail.
5. Replaced EOL components:
   - TPS27082LDDCR -> TPS22918DBVT (U96)
   - ESD3V3U4ULCE6327XTSA1 -> AOZ8808DI-03 (U28)
6. New SFP+ connector: 2007492-5 instead of 1-2007492-5

REV04a (30.08.2019):

1. Resistor R65 (USB VBUS) replaced by 1K.

trenz electronic	Title: TEB0911 - REVISION CHANGES		
A4	Number: TEB0911 9BEX1MA		Rev. 04
Date: 18.09.2018	Copyright: Trenz Electronic GmbH		Page58 of 58
Filename: Revision_changes.SchDoc			